## Rubber-Metal Buffers AT

**Material:** Metal parts: Steel, zinc plated.
Elastomer: Natural rubber hardness 55° Shore.

Simple, reasonably priced standard components for elastic mounting. When shearing load occurs their load-bearing capacity is considerably lower than with pressure load. This has to be considered when horizontal mass forces or belt traction occur. The grade of rubber used has perfect physical properties.

Temperature resistant up to 80°C.

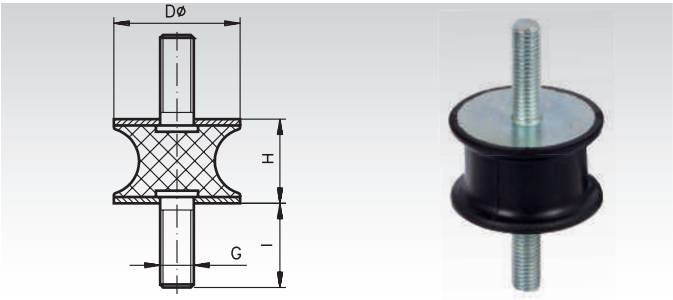


**Ordering Details: e.g.: Product No. 685 631 00, Rubber-Metal Buffers AT 20x15**

| Product No. | D Ø mm | H mm | G mm | I mm | Spring Rate CD medium N/mm | Perm. Pressure Load $F_{perm.}$* N | Weight g |
|---|---|---|---|---|---|---|---|
| **685 631 00** | 20 | 15 | M6 | 18 | 100 | 300 | 15 |
| **685 635 00** | 30 | 20 | M8 | 20 | 150 | 700 | 46 |
| **685 641 00** | 40 | 48 | M8 | 23 | 160 | 900 | 88 |
| **685 645 00** | 50 | 30 | M10 | 33 | 210 | 1100 | 140 |
| **685 651 00** | 75 | 40 | M12 | 37 | 600 | 3000 | 369 |
| **685 655 00** | 100 | 55 | M16 | 45 | 850 | 4100 | 975 |

* $F_{perm.}$: Note page 600 bottom.

## Rubber-Metal Buffers CT

**Material:** Metal parts: Steel, zinc plated.
Elastomer: Natural rubber hardness 55° Shore.

Rubber-Metal buffers are simple, reasonably priced standard components used for elastic mounting. When shearing load occurs their load-bearing capacity is considerably lower than with pressure load. This has to be considered when horizontal mass forces or belt traction occur. The grade of rubber used has perfect physical properties.

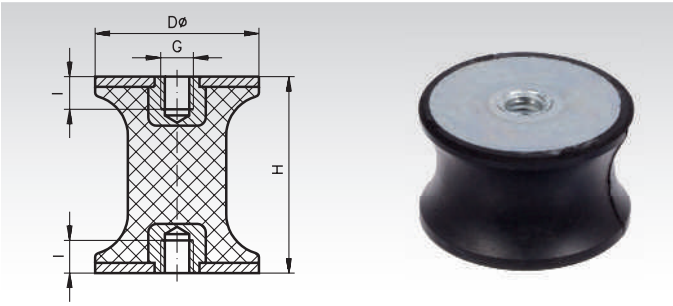


**Ordering Details: e.g.: Product No. 685 721 00, Rubber-Metal Buffers CT 10x10**

| Product No. | D Ø mm | H mm | G mm | I mm | Pressure Load Spring Rate CD medium N/mm | Pressure Load Perm. Pressure Load $F_{perm}$* N | Shearing Load Spring Rate CS medium N/mm | Shearing Load Perm. Shearing Load $F_{perm.}$* N | Weight g |
|---|---|---|---|---|---|---|---|---|---|
| **685 721 00** | 10 | 10 | M4 | 4 | 30 | 35 | 4 | 20 | 2 |
| **685 723 00** | 30 | 20 | M8 | 8 | 130 | 650 | 25 | 85 | 25 |
| **685 725 00** | 40 | 48 | M8 | 8 | 145 | 870 | 80 | 130 | 80 |
| **685 727 00** | 50 | 30 | M10 | 10 | 200 | 1000 | 63 | 240 | 63 |

* $F_{perm.}$: Note page 600 bottom.

## Rubber-Metal Buffers MGA with Internal Thread and Threaded Stud

**Material:** Elastomer: Natural rubber, hardness 55° Shore.
Metal parts: Steel, zinc plated or stainless steel 1.4301.

STAINLESS

One side with internal thread, other side with external thread.

Standard components for elastic mounting.
The grade of rubber used has perfect physical properties.

Temperature resistant up to 80°C.

Other sizes, Shore hardnesses or elastomer types on request.

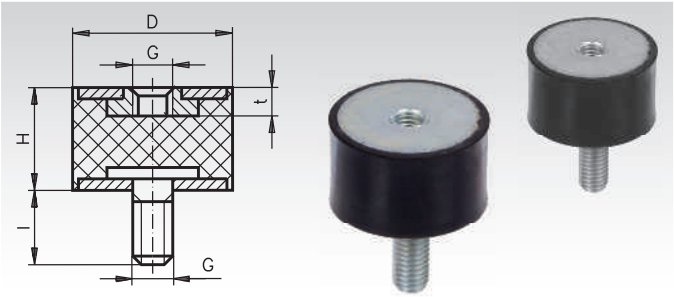


**Ordering Details: e.g.: Product No. 685 580 00, Rubber-Metal Buffers MGA, 8 mm**

| Product No. Zinc plated | Product No. Stainless | Ø D mm | H mm | G mm | l mm | t mm | Pressure Load Spring Load CD medium N/mm | Pressure Load Permiss. Load $F_{perm.}$* N | Shearing Load Spring Load CS medium N/mm | Shearing Load Permiss. Load $F_{perm.}$* N | Weight g |
|---|---|---|---|---|---|---|---|---|---|---|---|
| 685 580 00 | 689 580 00 | 8 | 8 | M3 | 6 | 3 | 28 | 35 | 10 | 10 | 1,0 |
| 685 581 00 | 689 581 00 | 10 | 10 | M4 | 10 | 4 | 48 | 43 | 10 | 15 | 2,7 |
| 685 583 00 | 689 583 00 | 10 | 15 | M4 | 10 | 4 | 29 | 43 | 5 | 15 | 3,6 |
| 685 590 00 | 689 590 00 | 15 | 15 | M4 | 10 | 4 | 67 | 95 | 15 | 35 | 8,3 |
| 685 591 15 | 689 591 15 | 15 | 15 | M5 | 8 | 5 | 65 | 95 | 5 | 35 | 5,0 |
| 685 591 20 | 689 591 20 | 15 | 20 | M4 | 10 | 4 | 43 | 95 | 12 | 35 | 6,0 |
| 685 591 30 | 689 591 30 | 15 | 30 | M4 | 15 | 4 | 32 | 95 | 9 | 35 | 9,0 |
| 685 592 15 | 689 592 15 | 20 | 15 | M6 | 18 | 6 | 110 | 170 | 37 | 60 | 14 |
| 685 592 20 | 689 592 20 | 20 | 20 | M6 | 18 | 6 | 85 | 170 | 17 | 60 | 16 |
| 685 601 00 | 689 601 00 | 20 | 25 | M6 | 18 | 6 | 61 | 170 | 11 | 60 | 17 |
| 685 602 15 | 689 602 15 | 25 | 15 | M6 | 18 | 6 | 165 | 280 | 45 | 95 | 25 |
| 685 602 00 | 689 602 00 | 25 | 20 | M6 | 18 | 6 | 130 | 280 | 30 | 95 | 28 |
| 685 602 25 | 689 602 25 | 25 | 25 | M6 | 18 | 6 | 89 | 280 | 27 | 95 | 29 |
| 685 602 30 | 689 602 30 | 25 | 30 | M6 | 18 | 6 | 71 | 280 | 19 | 95 | 31 |
| 685 607 15 | 689 607 15 | 30 | 15 | M8 | 20 | 8 | 270 | 400 | 68 | 140 | 38 |
| 685 607 00 | 689 607 00 | 30 | 20 | M8 | 20 | 8 | 235 | 400 | 42 | 140 | 41 |
| 685 607 25 | 689 607 25 | 30 | 25 | M8 | 20 | 8 | 180 | 400 | 37 | 140 | 45 |
| 685 603 00 | 689 603 00 | 30 | 30 | M8 | 20 | 8 | 113 | 400 | 28 | 140 | 47 |
| 685 605 00 | 689 605 00 | 30 | 40 | M8 | 20 | 8 | 106 | 400 | 13 | 140 | 60 |
| 685 598 00 | 689 598 00 | 40 | 25 | M8 | 23 | 8 | 265 | 650 | 35 | 250 | 77 |
| 685 608 00 | 689 608 00 | 40 | 30 | M8 | 23 | 8 | 234 | 650 | 49 | 250 | 91 |
| 685 600 00 | 689 600 00 | 40 | 30 | M10 | 28 | 10 | 234 | 650 | 48 | 250 | 92 |
| 685 609 00 | 689 609 00 | 40 | 40 | M8 | 23 | 8 | 147 | 650 | 23 | 250 | 103 |
| 685 610 20 | 689 610 20 | 50 | 20 | M10 | 28 | 10 | 450 | 1000 | 95 | 400 | 112 |
| 685 610 25 | 689 610 25 | 50 | 25 | M10 | 28 | 10 | 425 | 1000 | 82 | 400 | 125 |
| 685 610 30 | 689 610 30 | 50 | 30 | M10 | 28 | 10 | 395 | 1000 | 73 | 400 | 135 |
| 685 610 00 | 689 610 00 | 50 | 40 | M10 | 28 | 10 | 273 | 1000 | 58 | 400 | 168 |
| 685 611 00 | 689 611 00 | 50 | 45 | M10 | 33 | 10 | 250 | 1000 | 50 | 400 | 174 |
| 685 613 00 | 689 613 00 | 50 | 50 | M10 | 28 | 10 | 210 | 1000 | 37 | 400 | 183 |
| 685 613 60 | 689 613 60 | 60 | 40 | M10 | 28 | 10 | 390 | 1500 | 63 | 550 | 224 |
| 685 613 65 | 689 613 65 | 60 | 40 | M12 | 33 | 12 | 390 | 1500 | 60 | 550 | 243 |
| 685 613 70 | 689 613 70 | 70 | 45 | M10 | 28 | 10 | 450 | 1800 | 72 | 700 | 348 |
| 685 613 75 | 689 613 75 | 75 | 25 | M12 | 37 | 12 | 980 | 2300 | 270 | 850 | 299 |
| 685 614 40 | 689 614 40 | 75 | 40 | M12 | 37 | 12 | 735 | 2300 | 118 | 850 | 384 |
| 685 614 45 | 689 614 45 | 75 | 45 | M12 | 37 | 12 | 690 | 2300 | 105 | 850 | 417 |
| 685 614 00 | 689 614 00 | 75 | 50 | M12 | 37 | 12 | 530 | 2300 | 101 | 850 | 467 |
| 685 614 55 | 689 614 55 | 75 | 55 | M12 | 37 | 12 | 500 | 2300 | 90 | 850 | 469 |
| 685 615 00 | 689 615 00 | 100 | 40 | M16 | 41 | 16 | 2160 | 4200 | 283 | 1600 | 716 |
| 685 615 50 | 689 615 50 | 100 | 50 | M16 | 41 | 16 | 950 | 4200 | 220 | 1600 | 808 |
| 685 615 55 | 689 615 55 | 100 | 55 | M16 | 41 | 16 | 870 | 4200 | 170 | 1600 | 841 |
| 685 616 00 | 689 616 00 | 100 | 60 | M16 | 41 | 16 | 843 | 4200 | 142 | 1600 | 866 |
| 685 616 75 | 689 616 75 | 100 | 75 | M16 | 41 | 16 | 750 | 4200 | 110 | 1600 | 1026 |

* $F_{perm.}$: Note page 600 bottom.

## Rubber-Metal Buffers MGI

**Material:** Elastomer: Natural rubber, hardness 55° Shore.
Metal parts: Steel, zinc plated or stainless steel 1.4301.

STAINLESS

Both sides with internal thread.

Standard components for elastic mounting.
The grade of rubber used has perfect physical properties.

Temperature resistant up to 80°C.

Other sizes, Shore hardnesses or elastomer types on request.

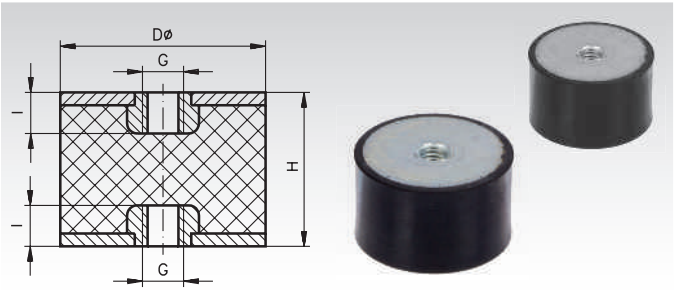


**Ordering Details: e.g.: Product No. 685 410 00, Rubber-Metal Buffer 10 mm**

| Product No. Zinc plated | Product No. Stainless | Ø D mm | H mm | G mm | l mm | Pressure Load Spring Load CD medium N/mm | Pressure Load Permiss. Load $F_{perm.}$* N | Shearing Load Spring Load CS medium N/mm | Shearing Load Permiss. Load $F_{perm.}$* N | Weight g |
|---|---|---|---|---|---|---|---|---|---|---|
| **685 410 00** | **689 410 00** | 10 | 10 | M4 | 4 | 39 | 43 | 9 | 15 | 2 |
| **685 410 15** | **689 410 15** | 10 | 15 | M4 | 4 | 28 | 43 | 4 | 15 | 2 |
| **685 415 00** | **689 415 00** | 15 | 15 | M4 | 4 | 62 | 95 | 12 | 35 | 5 |
| **685 420 00** | **689 420 00** | 20 | 25 | M6 | 6 | 103 | 170 | 15 | 60 | 17 |
| **685 425 00** | **689 425 00** | 25 | 20 | M6 | 6 | 83 | 170 | 16 | 60 | 24 |
| **685 425 30** | **689 425 30** | 25 | 30 | M6 | 6 | 67 | 280 | 16 | 95 | 30 |
| **685 430 00** | **689 430 00** | 30 | 20 | M8 | 8 | 207 | 400 | 37 | 140 | 35 |
| **685 430 30** | **689 430 30** | 30 | 30 | M8 | 8 | 117 | 400 | 24 | 140 | 44 |
| **685 430 40** | **689 430 40** | 30 | 40 | M8 | 8 | 67 | 400 | 13 | 140 | 50 |
| **685 440 00** | **689 440 00** | 40 | 30 | M8 | 8 | 209 | 650 | 41 | 250 | 78 |
| **685 440 40** | **689 440 40** | 40 | 40 | M8 | 8 | 114 | 650 | 20 | 250 | 93 |
| **685 450 00** | **689 450 00** | 50 | 30 | M10 | 10 | 352 | 1000 | 68 | 400 | 126 |
| **685 450 40** | **689 450 40** | 50 | 40 | M10 | 10 | 247 | 1000 | 51 | 400 | 145 |
| **685 450 50** | **689 450 50** | 50 | 50 | M10 | 10 | 118 | 1000 | 37 | 400 | 169 |
| **685 475 00** | **689 475 00** | 75 | 40 | M12 | 12 | 720 | 2300 | 110 | 850 | 366 |
| **685 475 50** | **689 475 50** | 75 | 50 | M12 | 12 | 498 | 2300 | 89 | 850 | 425 |
| **685 500 00** | **689 500 00** | 100 | 40 | M16 | 16 | 1830 | 4200 | 249 | 1600 | 733 |
| **685 500 60** | **689 500 60** | 100 | 60 | M16 | 16 | 770 | 4200 | 129 | 1600 | 863 |

* $F_{perm.}$: Note page 600 bottom.

## Heavy-Duty steel rubber Bushes PHO

**Material:** Metal Parts: Steel.
Elastomer: Natural rubber, Strength 55° Shore.

Fit: Up to external diameter 30mm: mounting hole H11 / H12.
From external diameter 34mm: mounting hole H13.

Temperature resistant up to 80°C.

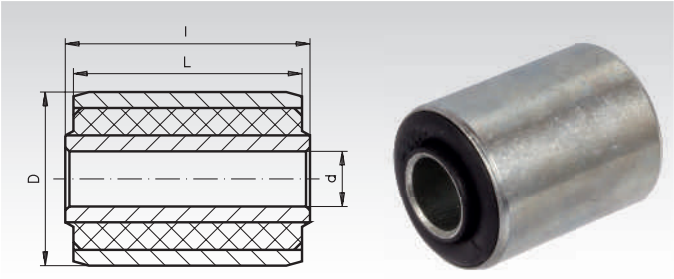


**Ordering Details: e.g.: Product No. 685 001 00, Heavy Duty Bush PHO, 26 mm**

| Product No. | External Ø D mm | Internal Ø d mm | Length of Internal Bush l mm | Length of External Bush L mm | Radial-Load Perm.Stat. Radial Load $F_r$ N | Radial-Load Radial Spring Rate $C_r$ N/mm | Axial-Load Perm.Stat. Axial Load $F_a$ N | Axial-Load Axial Spring Rate $C_a$ N/mm | Perm.St. Torsion Angle φ degrees | Perm.St. Torque $M_d$ Nm | Torsion Torsion Spring Rate Cf Nm/degree | Perm. Max. Torsion Angle $\varphi_{max.}$ degrees | Perm. Max. Torque $Md_{max}$ Nm | Weight g |
|---|---|---|---|---|---|---|---|---|---|---|---|---|---|---|
| **685 001 00** | $26^{+0,1}$ | $12^{+0,15}$ | $24,0^{\pm0,1}$ | $18,0^{\pm0,3}$ | 690 | 1962 | 680 | 226 | 13 | 4,4 | 0,338 | 26 | 9,0 | 37 |
| **685 002 00** | $30^{+0,1}$ | $13^{+0,15}$ | $40,0^{\pm0,1}$ | $40,0^{\pm0,3}$ | 1670 | 3335 | - | 392 | 15 | 9,0 | 0,6 | 30 | 18,0 | 79 |
| **685 003 00** | $34^{+0,15}$ | $18^{+0,3}$ | $36,0^{\pm0,1}$ | $32,0^{\pm0,3}$ | 1570 | 3237 | 830 | 417 | 14 | 12,0 | 0,9 | 28 | 25,0 | 94 |
| **685 004 00** | $45^{+0,15}$ | $20^{+0,3}$ | $62,5^{\pm0,1}$ | $55,0^{\pm0,3}$ | 3430 | 3924 | 1860 | 540 | 15 | 22,0 | 1,5 | 30 | 44,0 | 255 |
| **685 005 00** | $45^{+0,15}$ | $20^{+0,3}$ | $62,5^{\pm0,1}$ | $59,5^{\pm0,3}$ | 3920 | 4905 | 910 | 608 | 15 | 30,0 | 2,0 | 30 | 60,0 | 258 |
| **685 006 00** | $50^{+0,15}$ | $25^{+0,3}$ | $67,5^{\pm0,1}$ | $65,5^{\pm0,3}$ | 6380 | 6082 | 760 | 755 | 15 | 60,0 | 3,9 | 30 | 120,0 | 370 |
| **685 007 00** | $55^{+0,15}$ | $25^{+0,3}$ | $93,5^{\pm0,1}$ | $89,5^{\pm0,3}$ | 9810 | 8829 | 1650 | 824 | 15 | 70,0 | 4,6 | 30 | 140,0 | 677 |
| **685 008 00** | $55^{+0,15}$ | $30^{+0,4}$ | $94,0^{\pm0,1}$ | $89,5^{\pm0,3}$ | 13730 | 16677 | 2600 | 1177 | 13 | 100,0 | 7,6 | 26 | 200,0 | 622 |
| **685 009 00** | $70^{+0,15}$ | $50^{+0,4}$ | $60,0^{\pm0,1}$ | $60,0^{\pm0,3}$ | 11770 | 10620 | - | 1511 | 6,5 | 140,0 | 21,1 | 13 | 370,0 | 494 |
| **685 010 00** | $75^{+0,2}$ | $40^{+0,4}$ | $70,0^{\pm0,1}$ | $57,0^{\pm0,3}$ | 5890 | 4611 | 4510 | 697 | 14 | 130,0 | 9,1 | 28 | 260,0 | 759 |

## General

These Rubber-Metal, heavy-duty bushes feature an especially high permissible load and large permissible deformation. This great performance is achieved because the rubber parts are firmly attached to the metal parts. The bushes withstand radial, axial and torsional load, without the rubber moving in relation to the metal parts. Minimal gimbal offset (tilting) of the axis of the inner tube in relation to the outer tube, or vice versa, is possible. Depending on the strength, hardness, and length of the rubber, the rubber parts are relatively stiff.

Can be used in machine building or car manufacture as elastic joints, which at permanent operation have to withstand a deflection of approx. ±15° and have to absorb higher radial forces. During deflection a recoiling moment occurs, which is proportional to the torsional angle, as the rubber cannot move in relation to the metal. The bushes are completely maintenance free, silent and vibration isolating along with a high fatigue strength. Spring element and joint are combined in one single element.

The grade of rubber used is not oil proof. An operating temperature of max. 80° must not be exceeded, otherwise the service life is shortened. Hardness about 60 Shore-A-units. The bushes are usually fixed to the outer tube by pressfit.The inner tube can, e.g., be fixed by applying pressure on the front face. In this case the bolt running through the bore of the bush presses the counter bearing against the front face of the inner tube.

## Profile Dampers TR Radial Damping

**Material:** Co-Polyester Elastomer.

Maintenance-free, self-contained damping element. The radial deformation provides a very soft deceleration with a progressive energy absorption towards the end of the stroke. The excellent temperature characteristic of the material provides consistent damping performance over a temperature range of -40°C to +90°C.
The low installed weight, the economic price and the long operating life of up to 1 million cycles makes this an attractive alternative to hydraulic end position damping, if the moving mass does not need to stop in an exact datum position and it is not necessary to absorb 100% of the incoming energy. The space-saving, compact shape has been realized in all sizes ranging from Ø29 mm up to Ø83 mm and is installed very simply and quickly with the supplied, specially shaped mounting bolt. The TR Series has been specially developed to provide maximum stroke at a minimum mounting space in the capacity range from 2 Nm up to 115 Nm.
The life cycle is up to 20 times longer than for urethene dampers, up to ten times longer than for rubber and up to five times longer than for steel springs.

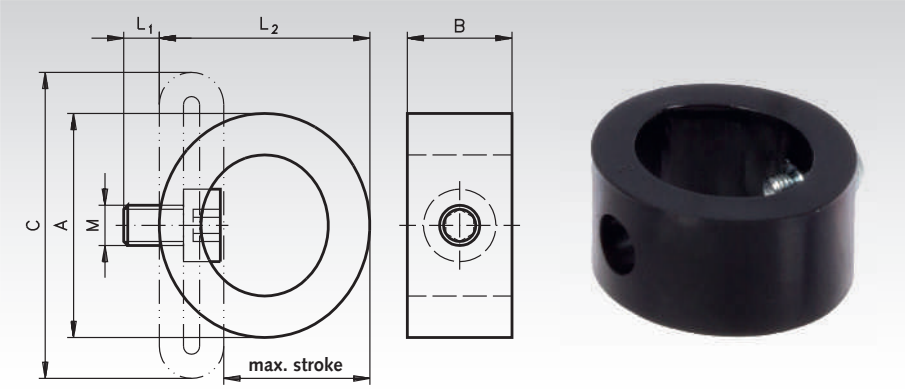


**Overload Capacity:** For one cycle it is possible to exceed the $W_3$ rating by 40%.

**Environment:** Resistant to oil, grease seawater and to microbe or chemical attack. Excellent UV and ozone resistance. Material does not absorb water or swell.

**Dynamic Force Range:**
300 N to 2100 N.

**Temperature Range:**
-40°C to +90°C.

**Energy Absorption:** 17% to 35%.

**Material Hardness:** Shore 40D

**Mounting:** in any position

**Impact Velocity range:** up to max. 5 m/s

**Mounting Bolt Torque:**
M5: 6 Nm
M6: 10 Nm

**On request: special strokes, characteristics, spring rates, sizes and materials.**

**Ordering Details: e.g.:**
**Product No. 691 229 00, Damper TR, Ø 28 mm**

| Product No. | Type | $W_3$* Nm/Stroke | Max. Stroke mm | A** mm | $L_1$ mm | M Thread | $L_2$** mm | B** mm | C** mm | Weight g |
|---|---|---|---|---|---|---|---|---|---|---|
| **691 229 00** | 29-17 | 2 | 17 | 28 | 5 | M5 | 25 | 13,5 | 38 | 10 |
| **691 237 00** | 37-22 | 3 | 22 | 36 | 5 | M5 | 32 | 19,5 | 50 | 15 |
| **691 243 00** | 43-25 | 4 | 25 | 43 | 5 | M5 | 37 | 19,5 | 58 | 20 |
| **691 250 00** | 50-35 | 6 | 35 | 49 | 5 | M5 | 44 | 34 | 68 | 25 |
| **691 263 00** | 63-43 | 15 | 43 | 64 | 5 | M5 | 55 | 43,5 | 87 | 55 |
| **691 267 00** | 67-40 | 25 | 40 | 66,5 | 5 | M5 | 59 | 46 | 88 | 80 |
| **691 276 00** | 76-46 | 40 | 46 | 76 | 6 | M6 | 67 | 46 | 102 | 105 |
| **691 283 00** | 83-50 | 45 | 50 | 83 | 6 | M6 | 73 | 51 | 109 | 150 |

* Max. energy capacity per cycle for continuous use. For a single cycle it is possible to exceed this rating by +40% ** Approx. dimension.

## Characteristics of Product No. 691 250 00

**Energy-Stroke Characteristics** (static)
$E_{tot}$ 4.3 Nm $E_{abs}$: 0.9 Nm $E_{abs/tot}$: 22%

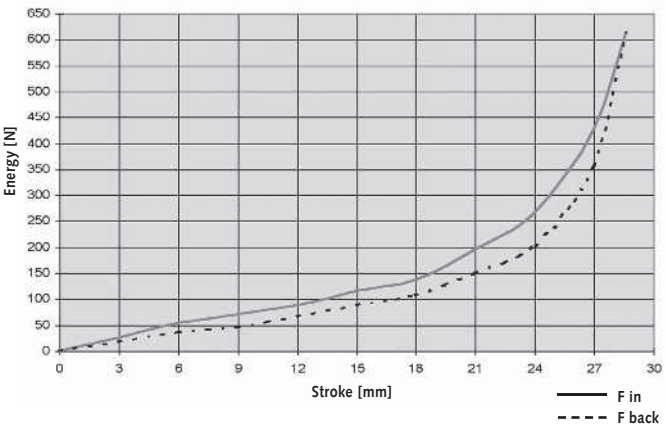


**Force-Stroke and Energy Stroke Characteristic** (dynamic)
$E_{tot}$: 6.1 Nm $E_{abs}$: 2.1 Nm $E_{abs/tot}$: 35%

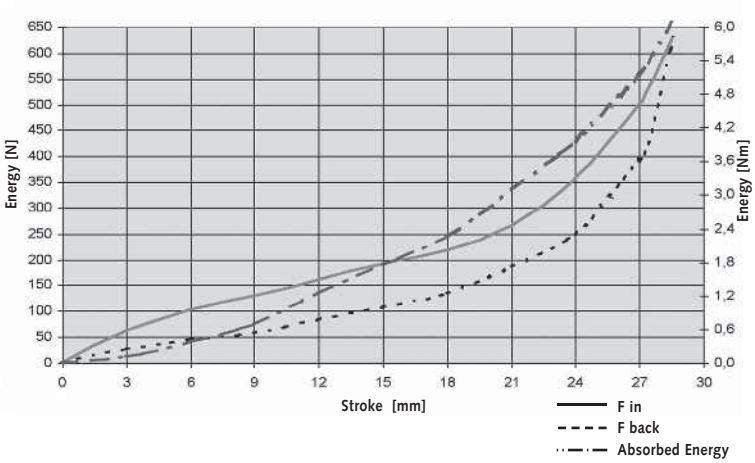


With aid of the characteristics curves above you can determine the amount of energy that will be absorbed.
Example: Energy to be absorbed 3 Nm = stroke needed 21 mm see chart energy-stroke characteristic. The energy stroke chart serves to determine the absorbed or rebound energy at a given stroke length.
**Dynamic (v>0.5 m/s) and static (v≤0.5 m/s) characteristics for all types available on request.**

## Profile Dampers TA Axial Damping

**Material:** Co-Polyester Elastomer.

Maintenance-free, self-contained damping elements. Due to the degressive damping characteristics it provides a very high energy absorption at the beginning of the stroke. The excellent temperature characteristic of the material provides consistent damping performance over a temperature range of -40°C to +90°C.

The low installed weight, the economic price and the long operating life of up to 1 million cycles makes this an attractive alternative to hydraulic end position damping, if the moving mass does not need to stop in an exact datum position and it is not necessary to absorb 100% of the incoming energy. The space-saving, compact shape has been realized in all sizes ranging from Ø12 mm up to Ø80 mm and is installed very simply and quickly with the supplied, specially shaped mounting bolt. The TA Series has been specially developed to provide maximum stroke at a minimum mounting space in the capacity range from 2 Nm up to 280 Nm.

The life cycle is up to 20 times longer than for urethene dampers, up to ten times longer than for rubber and up to five times longer than for steel springs.

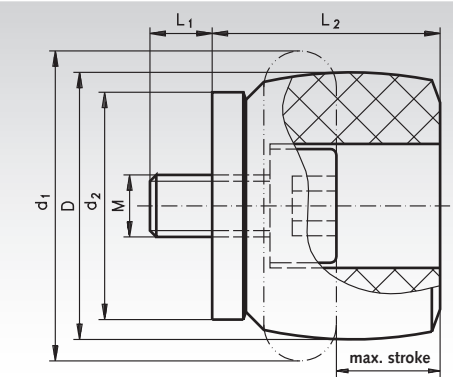

**Overload Capacity:** For one cycle it is possible to exceed the $W_3$ rating by 40%.

**Environment:** Resistant to oil, grease seawater and to microbe or chemical attack. Excellent UV and ozone resistance. Material does not absorb water or swell.

**Dynamic Force Range:**
980 N to 23500 N.

**Temperature Range:**
-40°C to +90°C.

**Energy Absorption:** 40% to 59%.

**Material Hardness:** Shore 55D

**Mounting:** in any position

**Impact Velocity range:** up to max. 5 m/s

**Mounting Bolt Torque:**

| | |
|---|---|
| M3: | 2 Nm |
| M4: | 4 Nm |
| M5: | 6 Nm |
| M6: | 10 Nm |
| M8: | 25 Nm |
| M12: | 85 Nm |
| M16: | 210 Nm |

**On request: special strokes, characteristics, spring rates, sizes and materials.**

| Product No. | Type | $W_3$* Nm/Stroke | Max. Stroke mm | D** mm | $L_1$ mm | M Thread | $L_2$** mm | $d_1$** mm | $d_2$** mm | Weight g |
|---|---|---|---|---|---|---|---|---|---|---|
| **691 012 00** | 12-5 | 2 | 5 | 12 | 3 | M3 | 10,5 | 15 | 11 | 3 |
| **691 017 00** | 17-7 | 6 | 7 | 17 | 4 | M4 | 16 | 22 | 15 | 4 |
| **691 021 00** | 21-9 | 10 | 9 | 20 | 5 | M5 | 18,5 | 26 | 18 | 5 |
| **691 022 00** | 22-10 | 15 | 10 | 20 | 6 | M6 | 19,5 | 27 | 19 | 5 |
| **691 028 00** | 28-12 | 30 | 12 | 28 | 6 | M6 | 26 | 36 | 25 | 10 |
| **691 034 00** | 34-14 | 50 | 14 | 34 | 6 | M6 | 30 | 43 | 30 | 20 |
| **691 037 00** | 37-16 | 65 | 16 | 34 | 6 | M6 | 33 | 48 | 33 | 25 |
| **691 043 00** | 43-18 | 100 | 18 | 43 | 8 | M8 | 38 | 55 | 38 | 40 |
| **691 047 00** | 47-20 | 130 | 20 | 45 | 12 | M12 | 41 | 60 | 41 | 50 |
| **691 050 00** | 50-22 | 160 | 22 | 50 | 12 | M12 | 45 | 64 | 44 | 60 |
| **691 054 00** | 54-22 | 190 | 22 | 52 | 12 | M12 | 47 | 68 | 47 | 65 |
| **691 057 00** | 57-24 | 230 | 24 | 57 | 12 | M12 | 52 | 73 | 50 | 90 |
| **691 062 00** | 62-25 | 280 | 25 | 59 | 12 | M12 | 54 | 78 | 53 | 105 |
| **691 065 00** | 65-27 | 350 | 27 | 65 | 12 | M12 | 58 | 82 | 57 | 130 |
| **691 080 00** | 80-32 | 600 | 32 | 80 | 16 | M16 | 69 | 100 | 69 | 225 |

* Max. energy capacity per cycle for continuous use. For a single cycle it is possible to exceed this rating by +40% ** Approx. dimensions.

## Characteristics of Product No. 691 037 00

**Force-Stroke Characteristics** (static)

$E_{tot}$: 25.9 Nm $E_{abs}$: 12.0 Nm $E_{abs/tot}$: 46%

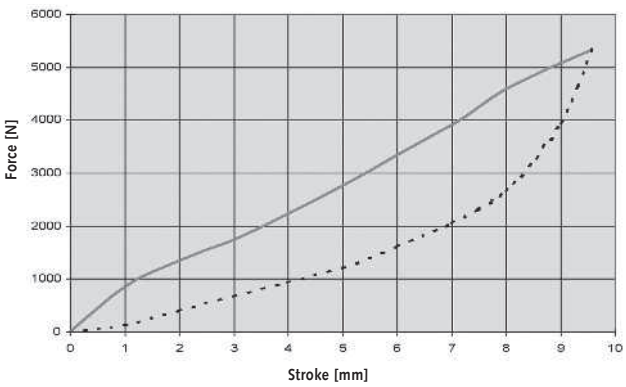


**Force-Stroke and Energy-Stroke Characteristics** (dynamic)

$E_{tot}$: 62.6 Nm $E_{abs}$: 40.3 Nm $E_{abs/tot}$: 64%

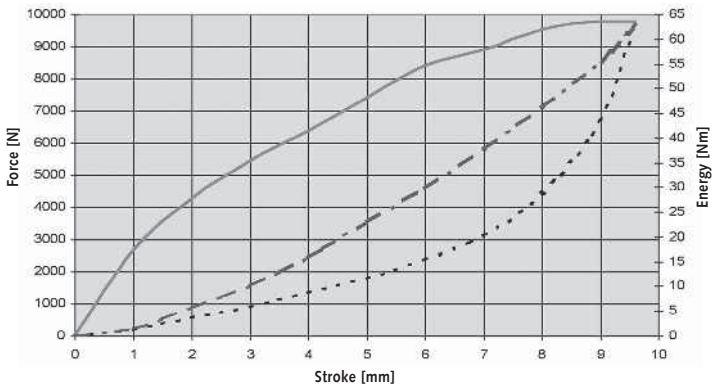


With aid of the characteristics curves above you can determine the amount of the energy that will be absorbed.
Example: Energy to be absorbed 50 Nm = stroke needed 8.8 mm see chart energy-stroke characteristic. The energy stroke chart serves to determine the absorbed or rebound energy at a given stroke length.
**Dynamic (v>0.5 m/s) and static (v≤0.5 m/s) characteristics for all types available on request.**

## Profile Dampers TS, Axial, Soft Damping

**Material:** Co-Polyester Elastomer.

Maintenance free, self-contained damping elements. Due to the almost linear damping characteristics it provides very smooth energy absorption along with minimum reaction loads on the machine. The excellent temperature characteristic of the material provides consistent damping performance over a temperature range of -40°C to +90°C.

The low installed weight, the economic price and the long operating life of up to 1 million cycles makes this an attractive alternative to hydraulic end position damping, if the moving mass does not need to stop in an exact datum position and it is not necessary to absorb 100% of the incoming energy. The space-saving compact shape has been realised in all size ranges from Ø14 mm up to Ø64 mm and is very simply and quickly installed with the supplied, specially shaped mounting bolt. The TS Series has been specially developed to provide maximum energy absorption for the minimum overall height in the capacity range from 2 Nm to 65 Nm.

The life cycle is up to 20 times longer than the urethane dampers, up to 10 times longer than for rubber and up to 5 times longer than for steel springs.

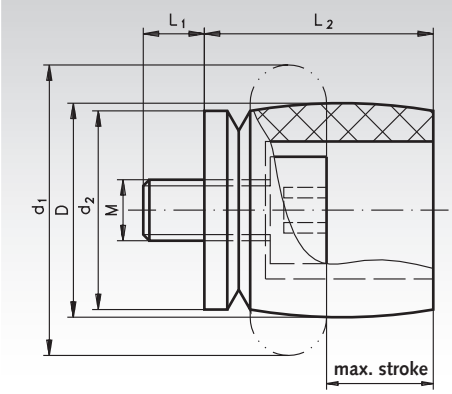

**Overload Capacity:** For one cycle it is possible to exceed the W3 rating by 40%.

**Environment:** Resistant to microbes, seawater, chemicals and exhibits excellent UV and ozone resistance.
Material does not absorb water and swell.

**Dynamic Force Range:**
670 N to 5800 N.

**Permissible temperature range:**
-40°C to +90°C.

**Energy absorption:** 26% to 45%.

**Material hardness:** Shore 40D

**Mounting position:** optional

**Impact velocity range:** up to max. 5 m/s

**Tightening torque:**
M4: 4 Nm
M5: 6 Nm
M6: 10 Nm
M12: 85 Nm
M16: 210 Nm

**Special strokes, characteristics, spring rates, sizes and materials on request.**

**Ordering Details: e.g.: Product No. 691 114 00, Damper TS, Ø 14 mm.**

| Product No. | Type | $W_3$* Nm/Stroke | Max. stroke mm | D** mm | $L_1$ mm | M Thread | $L_2$** mm | $d_1$** mm | $d_2$** mm | Weight g |
|---|---|---|---|---|---|---|---|---|---|---|
| **691 114 00** | 14-7 | 2 | 7 | 14 | 4 | M4 | 15 | 19 | 13 | 3 |
| **691 118 00** | 18-9 | 4 | 9 | 17 | 5 | M5 | 18,5 | 24 | 16 | 4 |
| **691 120 00** | 20-10 | 6 | 10 | 19,5 | 6 | M6 | 21 | 27 | 19 | 5 |
| **691 126 00** | 26-15 | 15 | 15 | 26 | 6 | M6 | 28 | 37 | 25 | 10 |
| **691 132 00** | 32-16 | 25 | 16 | 31 | 6 | M6 | 33 | 44 | 30 | 15 |
| **691 135 00** | 35-19 | 30 | 19 | 33,5 | 6 | M6 | 36,5 | 48 | 33 | 25 |
| **691 140 00** | 40-19 | 35 | 19 | 36,5 | 6 | M6 | 37,5 | 51 | 34 | 30 |
| **691 141 00** | 41-21 | 45 | 21 | 39,5 | 12 | M12 | 41,5 | 55 | 38 | 40 |
| **691 144 00** | 44-23 | 65 | 23 | 42 | 12 | M12 | 44,5 | 60 | 40 | 45 |
| **691 148 00** | 48-25 | 80 | 25 | 48 | 12 | M12 | 49 | 64 | 44 | 60 |
| **691 151 00** | 51-27 | 90 | 27 | 51 | 12 | M12 | 52 | 69 | 47 | 70 |
| **691 154 00** | 54-29 | 115 | 29 | 54 | 12 | M12 | 55 | 73 | 50 | 80 |
| **691 158 00** | 58-30 | 135 | 30 | 58 | 12 | M12 | 59 | 78 | 53 | 100 |
| **691 161 00** | 61-32 | 160 | 32 | 61 | 16 | M16 | 62 | 83 | 56 | 120 |
| **691 164 00** | 64-34 | 195 | 34 | 64 | 16 | M16 | 66 | 87 | 60 | 145 |

* Max. energy absorption per stroke for continuous use. For a single cycle it is possible to exceed this rating by +40%. ** Approx. dimensions.

## Characteristics for Product No. 691 144 00

**Force-Stroke Characteristics** (static)

$E_{tot}$: 32,7 Nm $E_{abs}$: 10,1 Nm $E_{abs/tot}$: 31%

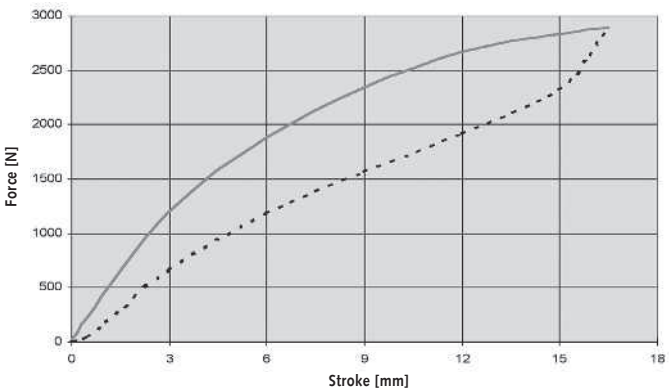


**Force-Stroke and Energy-Stroke Characteristics** (dynamic)

$E_{tot}$: 64,1 Nm $E_{abs}$: 29,2 Nm $E_{abs/tot}$: 45%

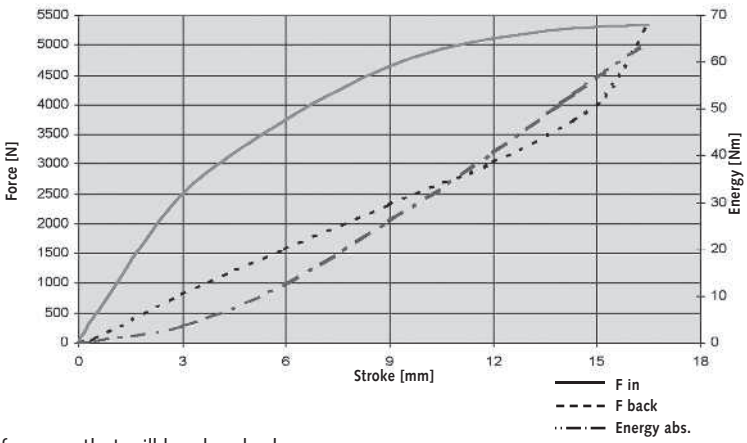


With aid of the characteristic curves, you can determine the amount of energy that will be absorbed.
For example: Energy to be absorbed 50 Nm = stroke needed 14 mm see chart of energy-stroke characteristic. The energy-stroke chart serves to determine the absorbed or rebound energy at a given stroke length.
**Dynamic (v>0.5 m/s) and static (v≤0.5 m/s) characteristics for all types available on request.**

## Miniature Shock Absorbers

**Material:** Shock absorber and accessories: Stahl burnished. Button: hardened. Piston rod: hardened, stainless steel.

Miniature shock absorbers are maintenance-free, self-contained hydraulic elements. The adjustable miniature shock absorbers can be perfectly set up for the respective application. They include an integrated mechanical stop. Due to the long stroke length, the unit offers smooth deceleration and low reaction forces.

These shock absorbers are ideal for absorbing fast movements in small linear units, handling modules, robotics systems and other applications.

**Adjustment:** by turning the adjustment screw. After installation, cycle the machine a few times, turning the adjustment screw until optimum deceleration is achieved.

**Impact velocity range:** 0.3 to 3.6 m/s.

**Exceeding $W_4$** (max. energy absorption per hour) is possible, if the unit is turned off from time to time or the shock absorber is cooled with the cylinder exhaust air.

**Mounting position:** optional.

**Permissible temperature range:** 0°C to 66°C.

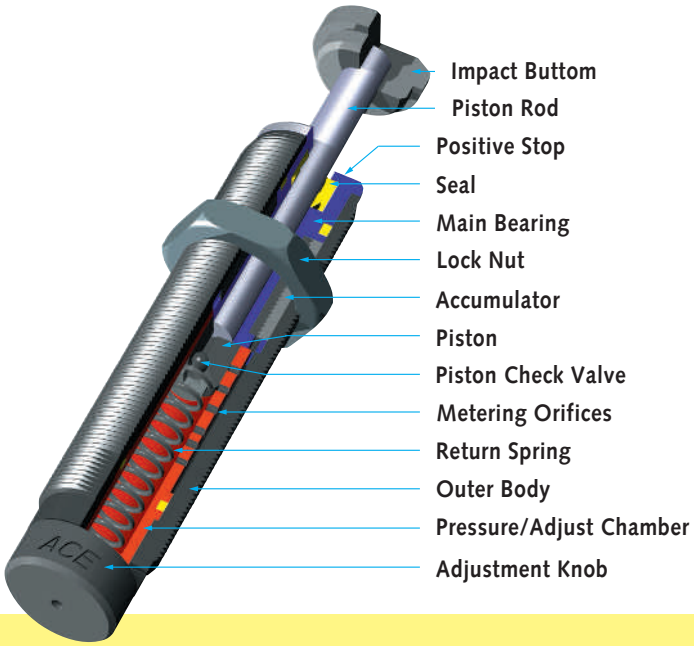


## Capacity Chart

| Product No. | Max. Energy Capacity per Cycle $W_3$ Nm | per hour $W_4$ Nm | Effective Weight me adjustable min. kg | max. kg | Return Force N | Rod Reset Time s | Max. Side Load Angle Degrees |
|---|---|---|---|---|---|---|---|
| **690 030 00** | 3,5 | 5650 | 0,23 | 15 | 1 - 5 | 0,3 | 2 |
| **690 050 00** | 5,5 | 5100 | 4,5 | 20 | 3 - 6 | 0,3 | 2 |
| **690 035 00** | 4 | 6000 | 5,9 | 57 | 5 - 11 | 0,2 | 2 |
| **690 150 00** | 22 | 35000 | 1,0 | 109 | 3 - 5 | 0,4 | 5* |
| **690 225 00** | 25 | 45000 | 2,3 | 226 | 5 - 10 | 0,1 | 2* |
| **690 600 00** | 68 | 68000 | 9,0 | 1360 | 10 - 30 | 0,2 | 2* |
| **690 900 00** | 100 | 90000 | 14 | 2040 | 10 - 35 | 0,4 | 1 |

* For higher side load angles consider using the Side Load Adaptor (on request).

## Dimensions

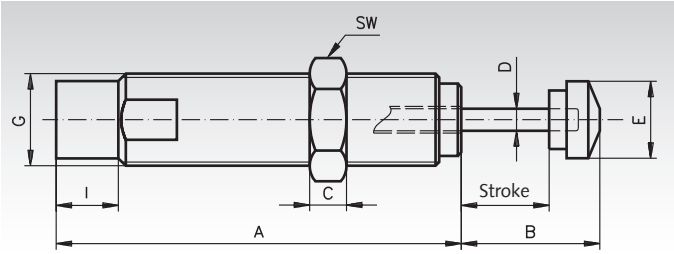


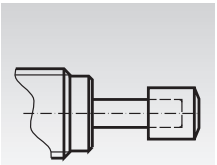

Type of Button A

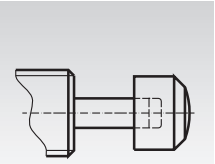

Type of Button B

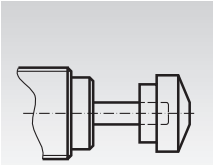

Type of Button C

**Ordering Details: e.g.: Product No. 690 030 00, Miniature Shock Absorbers, Stroke 8 mm**

| Product No. Miniature Shock Absorber | A mm | B mm | C mm | stroke mm | I mm | D Ø mm | E Ø mm | G Thread | Width Across Flats SW mm | Type of Buttom | Weight g | Product No. additional lock nut | Weight Lock nut g |
|---|---|---|---|---|---|---|---|---|---|---|---|---|---|
| **690 030 00** | 48 | 13,1 | 3 | 8 | 4,1 | 3,2 | 6,4 | M8x1 | 10 | A | 25 | **690 030 04** | 0,8 |
| **690 050 00** | 50 | 14,9 | 4 | 7 | 5,1 | 3,2 | 7,7 | M10x1 | 12 | A | 30 | **690 050 04** | 1,4 |
| **690 035 00** | 66 | 18 | 5 | 10 | 5 | 3,2 | 7,7 | M12x1 | 14 | A | 43 | **690 035 04** | 2,4 |
| **690 150 00** | 70 | 22,5 | 6 | 12,5 | 7,5 | 4,8 | 12 | M14x1,5 | 17 | B | 60 | **690 150 04** | 4,8 |
| **690 225 00** | 88 | 30 | 8 | 19 | 13,5 | 4,8 | 17 | M20x1,5 | 23 | C | 130 | **690 225 04** | 8 |
| **690 600 00** | 106,6 | 36,4 | 10 | 25,4 | 16,5 | 6,3 | 23 | M25x1,5 | 30 | C | 310 | **690 600 04** | 18 |
| **690 900 00** | 138 | 51 | 10 | 40 | 16,5 | 6,3 | 23 | M25x1,5 | 30 | C | 400 | **690 600 04** | 18 |

## Mounting Blocks

**Material:** Steel burnished.

When mounting blocks are used, the shock absorber has to be secured with a lock nut.
2 socket-head screws DIN 912 are included.

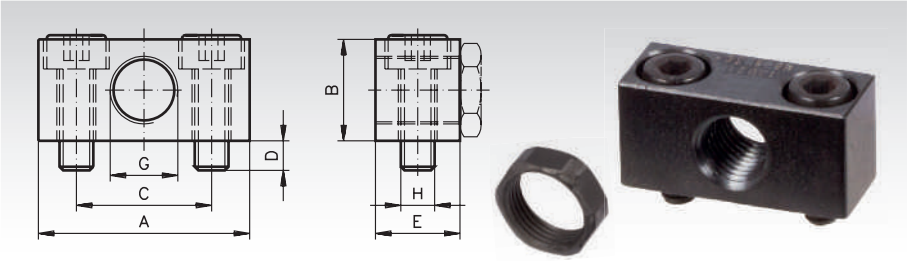


**Ordering Details: e.g.:**
**Product No. 690 030 01, Mounting Block M8x1**

| Product No. Mounting Block | for Product No. Shock absorbers | A mm | B mm | C mm | D mm | E mm | G Thread | H Thread | Tighten.Torque Nm | Weight g | Product No. Lock Nut | Weight g |
|---|---|---|---|---|---|---|---|---|---|---|---|---|
| **690 030 01** | 690 030 00 | 25 | 12 | 16 | 3,5 | 10 | M8x1 | M4x12 | 4 | 15 | **690 030 04** | 0,8 |
| **690 050 01** | 690 050 00 | 25 | 14 | 16 | 3,5 | 10 | M10x1 | M4x16 | 4 | 20 | **690 050 04** | 1,4 |

## Clamp Mounts

**Material:** Steel burnished.

When using the clamp mount, no lock nut is required. Fine adjustment can be carried out before the clamping.
2 socket-head screws DIN 912 are included.

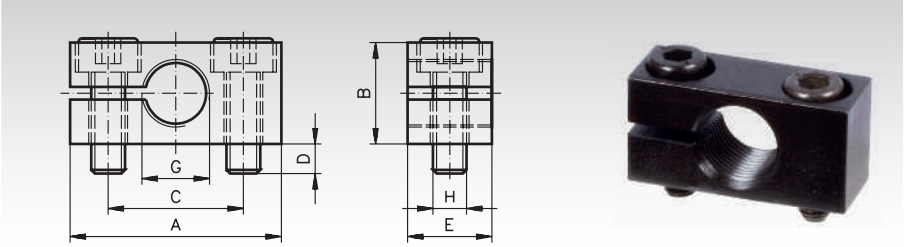


**Ordering Details: e.g.:**
**Product No. 690 035 02, Clamp Mount M12x1**

| Product No. Clamp Mount | for Product No. Shock absorbers | A mm | B mm | C mm | D mm | E mm | G Thread | H Thread | Tighten. Torque Nm | Weight g |
|---|---|---|---|---|---|---|---|---|---|---|
| **690 035 02** | 690 035 00 | 32 | 16 | 20 | 4,5 | 12 | M12x1 | M5x16 | 6 | 35 |
| **690 150 02** | 690 150 00 | 32 | 20 | 20 | 4,5 | 12 | M14x1,5 | M5x20 | 6 | 40 |
| **690 225 02** | 690 225 00 | 40 | 25 | 28 | 6 | 20 | M20x1,5 | M6x25 | 11 | 89 |
| **690 600 02** | 690 600 00 / 690 900 00 | 46 | 32 | 34 | 6 | 25 | M25x1,5 | M6x30 | 11 | 185 |

## Rectangular Flanges

**Material:** Steel burnished.

The rectangular flange allows front-end mounting without using an additional lock nut. The low and compact design allows space-saving constructions.
2 socket-head screws DIN 912 are included.

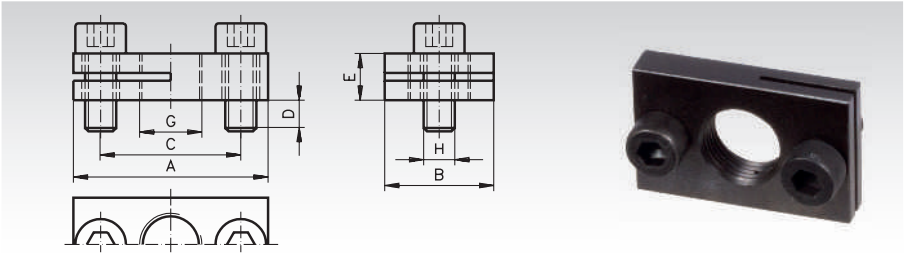


**Ordering Details: e.g.:**
**Product No. 690 030 03, Rectangular Flange M8x1**

| Product No. Rectangular Flange | for Product No. Shock absorbers | A mm | B mm | C mm | E mm | G Thread | H Thread | Tighten. Torque Nm | Weight g |
|---|---|---|---|---|---|---|---|---|---|
| **690 030 03** | 690 030 00 | 25 | 14 | 18 | 6 | M8x1 | M4x10 | 4 | 15 |
| **690 050 03** | 690 050 00 | 28 | 14 | 20 | 6 | M10x1 | M4x10 | 4 | 15 |
| **690 035 03** | 690 035 00 | 32 | 20 | 24 | 6 | M12x1 | M5x12 | 6 | 25 |
| **690 150 03** | 690 150 00 | 34 | 20 | 26 | 6 | M14x1,5 | M5x12 | 6 | 25 |
| **690 225 03** | 690 225 00 | 46 | 32 | 36 | 8 | M20x1,5 | M6x14 | 11 | 89 |
| **690 600 03** | 690 600 00 / 690 900 00 | 52 | 32 | 42 | 8 | M25x1,5 | M6x14 | 11 | 185 |

# Qualitiy Management DIN EN ISO 9001

## MÄDLER GmbH maintains a quality management system according to DIN EN ISO 9001 and was certified the first time in 1995.

On the iternet at **www. maedler.de** in the section **Downloads** you find:

- PDF catalogues in several languages.
- Operating instructions.
- Safety data sheets.
- Excel-Pricelist for customers in Germany.
- Certificates of conformity.
- Quality management certificate DIN 9001.
- Certificate AEO.
- Company profile.
- CAD files.

**MÄDLER®** meets even the highest quality requirements:Top quality, precision and reliability.

## Pneumatic-Elements Overview

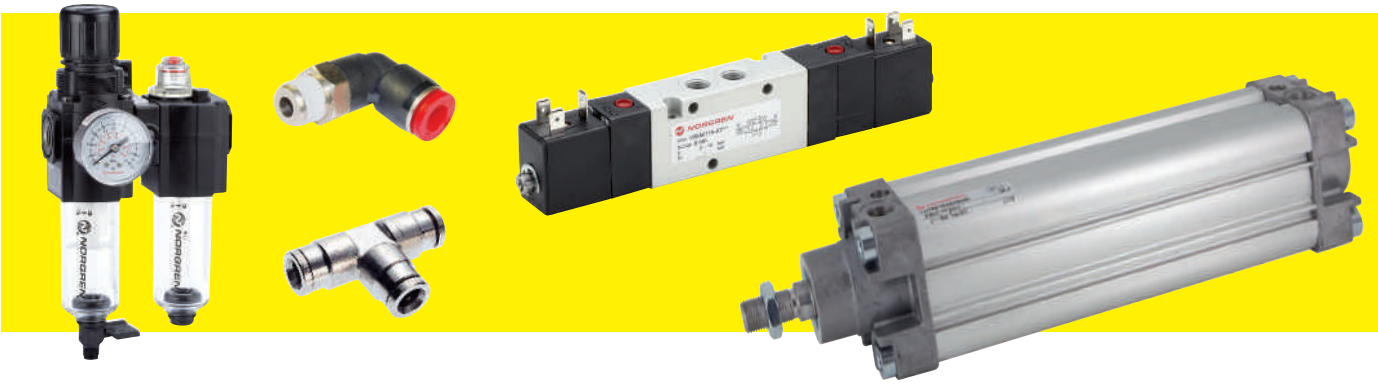

## Contents

Standard Cylinder
Diameter 32 - 80 mm.....Page 614

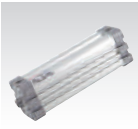

Compact Cylinder
Diameter 20 - 40 mm.....Page 616

Round-Line Cylinder
Diameter 10 - 25 mm.....Page 618

Mounting Elements for
Cylinders.....Page 620

Magnetic Switches for
Cylinders.....Page 627

Solenoid Valves for
Gases and Liquids .....Page 629

Solenoid Valves for Compressed Air
(Pneumatic Valves) .....Page 631

Air Preparation Equipment
and Accessories.....Page 634

Push-in and
Compression Fittings.....Page 638

Ball Valves, Manually Operated.....Page 644

Filters, Silencers, Flow Regulators,
Exhaust Valves, Non-Return and
Stop Valves, Tools.....Page 645

Tubing.....Page 648

Blow Guns and Accessories.....Page 649

## Double-Acting Standard Cylinder According to ISO 6431 and VDMA 24562 with Magnetic Piston

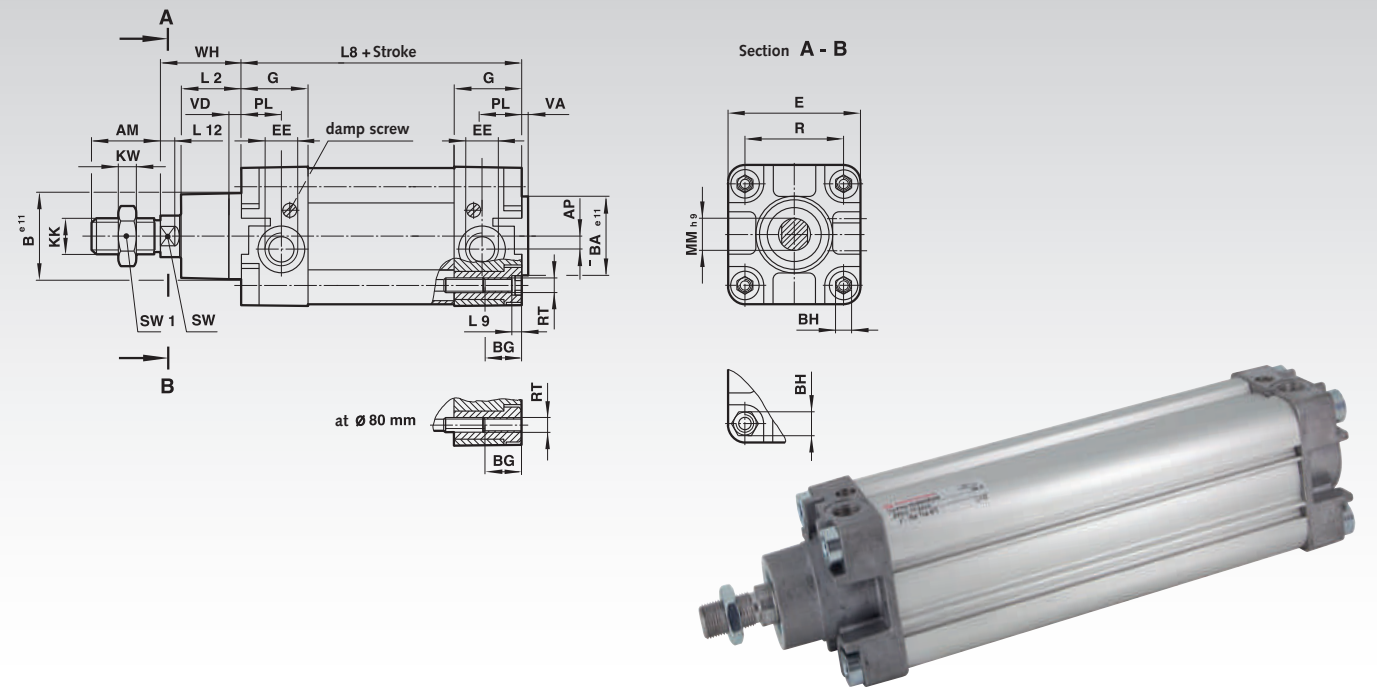


**Materials:** Profile barrel: Anodised aluminium. End covers: Aluminium die-cast. Piston rod: Stainless steel (ferritic), Piston and piston rod seals: Polyurethane. O-ring seals: Nitrile rubber.

Medium: Compressed air, filtered, lubricated or non-lubricated.
Standard: ISO 6431, VDMA 24562, NFE 49-003-1.
Mode of operation: Double-acting with magnetic piston and adjustable end-of-stroke cushioning.
Operating pressure:1 to 16 bar.
Operating temperature: -20°C to +80°C.
Below +2°C please consider the air quality.

| Cylinder Ø mm | Theoretical Forces (N) at 6 bar Thrust | Pull | Cushion Length mm | Initial Cushion Volume cm³ |
|---|---|---|---|---|
| **32** | 482 | 414 | 19 | 12,3 |
| **40** | 754 | 633 | 22 | 20,7 |
| **50** | 1178 | 990 | 24 | 36 |
| **63** | 1870 | 1680 | 24 | 64 |
| **80** | 3016 | 2722 | 27 | 116 |

**Ordering details: e.g.: Product No. 801 320 25, Double-Acting Standard Cylinder According to ISO 6431 with Magnetic Piston, Cylinder Ø 32 mm, Stroke 25 mm**

Symbol

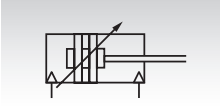

| Product No. 25 mm | 50 mm | 80 mm | 100 mm | 125 mm | 160 mm | 200 mm | 250 mm | Cylinder-Ø mm | Connection |
|---|---|---|---|---|---|---|---|---|---|
| | | | Standard Strokes | | | | | | |
| **801 320 25** | **801 320 50** | **801 320 80** | **801 321 00** | **801 321 25** | **801 321 60** | **801 322 00** | **801 322 50** | 32 | G1/8 |
| **801 400 25** | **801 400 50** | **801 400 80** | **801 401 00** | **801 401 25** | **801 401 60** | **801 402 00** | **801 402 50** | 40 | G1/4 |
| **801 500 25** | **801 500 50** | **801 500 80** | **801 501 00** | **801 501 25** | **801 501 60** | **801 502 00** | **801 502 50** | 50 | G1/4 |
| **801 630 25** | **801 630 50** | **801 630 80** | **801 631 00** | **801 631 25** | **801 631 60** | **801 632 00** | **801 632 50** | 63 | G3/8 |
| **801 800 25** | **801 800 50** | **801 800 80** | **801 801 00** | **801 801 25** | **801 801 60** | **801 802 00** | **801 802 50** | 80 | G3/8 |

| Cyl. Ø mm | AM mm | AP mm | ØB$^{e11}$ mm | ØBA$^{e11}$ mm | BG mm | BH mm | E mm | EE | G mm | KK mm | SW1 mm | KW mm | L2 mm |
|---|---|---|---|---|---|---|---|---|---|---|---|---|---|
| **32** | 22 | 3,5 | 30 | 30 | 18 | 6 | 47 | G1/8 | 27,5 | M10x1,25 | 17 | 5 | 20 |
| **40** | 24 | 4,5 | 35 | 35 | 18 | 6 | 53 | G1/4 | 32 | M12x1,25 | 19 | 6 | 22 |
| **50** | 32 | 6 | 40 | 40 | 18 | 8 | 65 | G1/4 | 31 | M16x1,5 | 24 | 8 | 27 |
| **63** | 32 | 10 | 45 | 45 | 17,5 | 8 | 75 | G3/8 | 33 | M16x1,5 | 24 | 8 | 29 |
| **80** | 40 | 8,5 | 45 | 45 | 21,5 | 19 | 95 | G3/8 | 33 | M20x1,5 | 30 | 10 | 33 |

| Cyl. Ø mm | L8 mm | L9 mm | L12 mm | MM$^{h9}$ mm | PL mm | R mm | RT mm | SW mm | VA mm | VD mm | WH mm | Weight in kg at 0 mm | per 25 mm |
|---|---|---|---|---|---|---|---|---|---|---|---|---|---|
| **32** | 94 | 4 | 6 | 12 | 13 | 32,5 | M 6 | 10 | 3 | 6 | 26 | 0,51 | 0,06 |
| **40** | 105 | 4 | 6,5 | 16 | 15 | 38 | M 6 | 13 | 3,5 | 6 | 30 | 0,80 | 0,08 |
| **50** | 106 | 5 | 8 | 20 | 18,5 | 46,5 | M 8 | 17 | 3,5 | 6 | 37 | 1,33 | 0,12 |
| **63** | 121 | 5 | 8 | 20 | 19 | 56,5 | M 8 | 17 | 4 | 6 | 37 | 1,80 | 0,13 |
| **80** | 128 | - | 10 | 25 | 19 | 72 | M 10 | 22 | 4 | 6 | 46 | 3,25 | 0,20 |

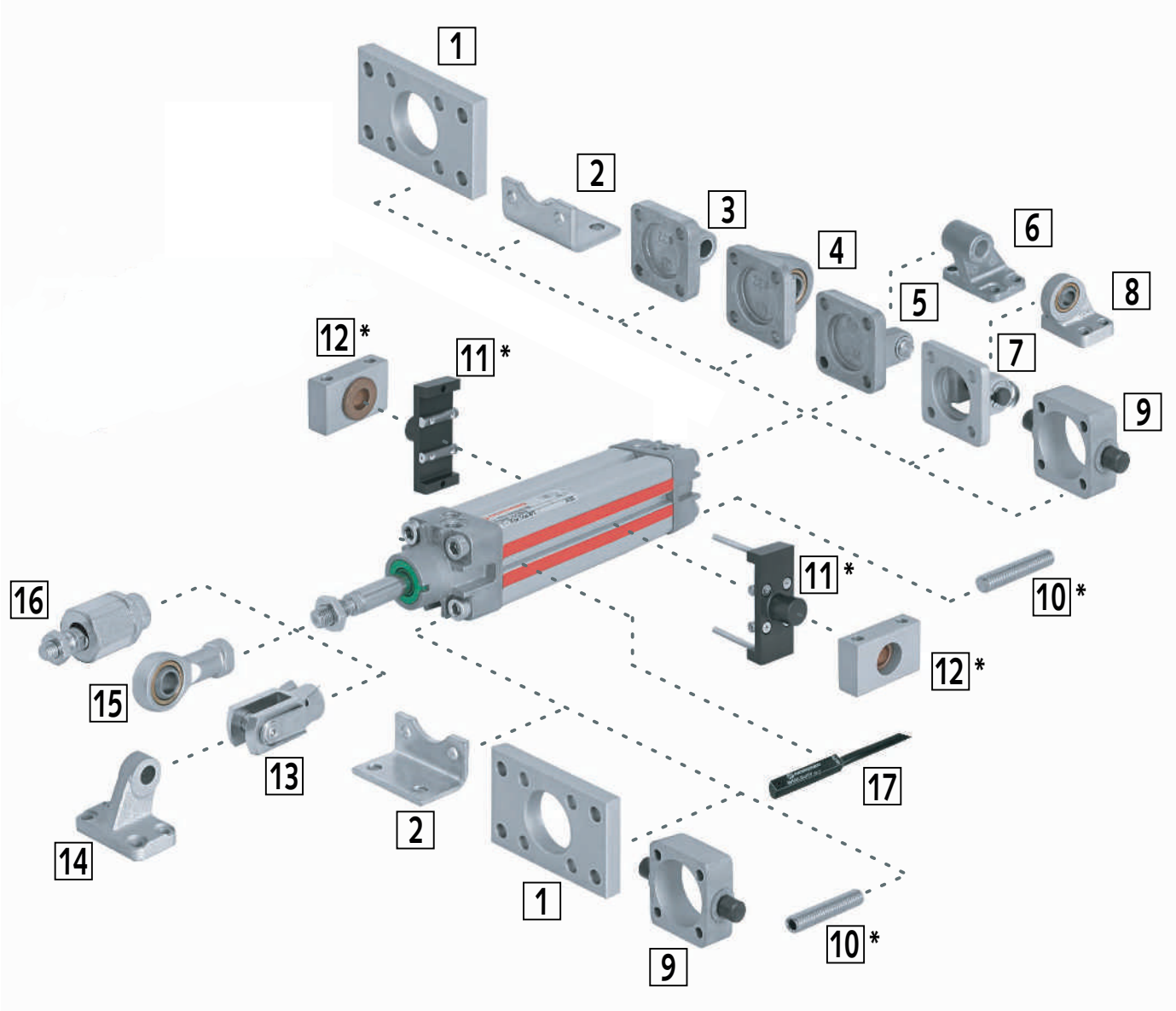


| No. | Designation | Cylinder Ø 32mm Product No. | Cylinder Ø 40mm Product No. | Cylinder Ø 50mm Product No. | Cylinder Ø 63mm Product No. | Cylinder Ø 80mm Product No. | Dim. Page* |
|---|---|---|---|---|---|---|---|
| 1 | Rear Flange, Front Flange | 810 001 32 | 810 001 40 | 810 001 50 | 810 001 63 | 810 001 80 | 620 |
| 2 | Foot Plate Mounting | 810 002 32 | 810 002 40 | 810 002 50 | 810 002 63 | 810 002 80 | 620 |
| 3 | Rear Eye Mounting | 810 004 32 | 810 004 40 | 810 004 50 | 810 004 63 | 810 004 80 | 620 |
| 4 | Rear Eye Mounting with Spherical Bearing | 810 012 32 | 810 012 40 | 810 012 50 | 810 012 63 | 810 012 80 | 621 |
| 5 | Rear Clevis Mounting Slim | 810 007 32 | 810 007 40 | 810 007 50 | 810 007 63 | 810 007 80 | 621 |
| 6 | Bracket Hinge Mounting, Rigid, Wide for No. 5 | 810 010 32 | 810 010 40 | 810 010 50 | 810 010 63 | 810 010 80 | 621 |
| 7 | Rear Clevis Mounting Slim | 810 008 32 | 810 008 40 | 810 008 50 | 810 008 63 | 810 008 80 | 622 |
| 8 | Bracket Hinge Mounting with Spherical Bearing No. 7 | 810 011 32 | 810 011 40 | 810 011 50 | 810 011 63 | 810 011 80 | 622 |
| 9 | Trunnion Mounting | 810 013 32 | 810 013 40 | 810 013 50 | 810 013 63 | 810 013 80 | 622 |
| 10 | Front or Rear Stud Mounting * | 810 006 32* | 810 006 32* | 810 006 50* | 810 006 50* | 810 006 80* | - |
| 11 | Adjustable Trunnion Mounting * | 810 014 32* | 810 014 40* | 810 014 50* | 810 014 63* | 810 014 80* | - |
| 12 | Swivel Bearings for No.9 oder No.11 | 810 015 32 | 810 015 40 | 810 015 40 | 810 015 63 | 810 015 63 | 623 |
| 13 | Clevis | 810 003 25 | 810 003 40 | 810 003 50 | 810 003 50 | 810 003 80 | 623 |
| 14 | Bracket Hinge Mounting, Rigid, Slim, for No.13 | 810 009 32 | 810 009 40 | 810 009 50 | 810 009 63 | 810 009 80 | 623 |
| 15 | Rod End | 810 005 25 | 810 005 40 | 810 005 50 | 810 005 50 | 810 005 80 | 623 |
| 16 | Piston Rod Swivel Mounting | 810 000 25 | 810 000 40 | 810 000 50 | 810 000 50 | 810 000 80 | 623 |

* Discontinued item.

No. 17: Magnetic switches 810 000 01 to 810 000 07 (page 627) can be mounted straight on the keyways of the profile barrel, without further elements.

## Double-Acting Compact Cylinder with Magnetic Piston, According to ISO 21287

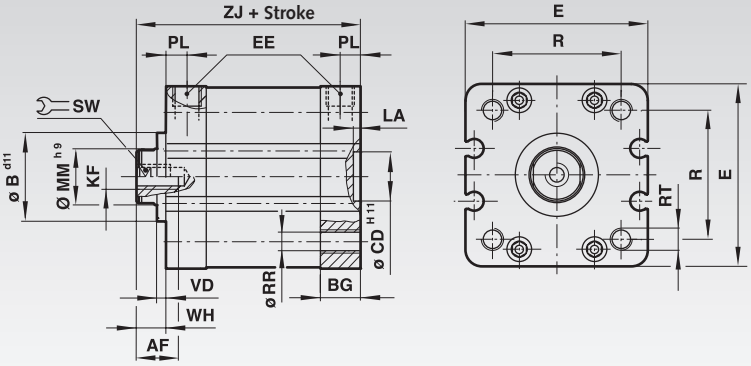

**Materials:**
Profile barrel: Anodised aluminium.
End covers: Aluminium die-cast.
Piston rod: Stainless steel (Ø 20 and 25 mm austenitic, Ø 32 and 40 mm ferritic).
Piston rod seal: Polyurethane.
Piston seal: Nitrile rubber.
O-ring seals: Nitrile rubber.

Medium: Compressed air, filtered, lubricated or non-lubricated
Standard: ISO 21287.
Mode of operation: double-acting, magnetic piston, piston rod with internal thread, buffer cushioning.
Operating pressure: 1 to 10 bar.
Operating temperature: -5°C* to +80°C.
* With temperatures below +2°C please consider the air quality.

On request also available with external thread.

| Cylinder Ø mm | Theoretical Forces at 6 bar (N) Thrust | Pull |
|---|---|---|
| **20** | 188 | 141 |
| **25** | 294 | 247 |
| **32** | 482 | 414 |
| **40** | 754 | 633 |

**Ordering details: e.g.: Product No. 803 200 10, Double-Acting Compact Cylinders with Magnetic Piston, Cylinder Ø 20 mm, Stroke 10 mm**

| Symbol | Product No. Standard Strokes 10 mm | 25 mm | 50 mm | Cyl. Ø mm | Connection |
|---|---|---|---|---|---|
| 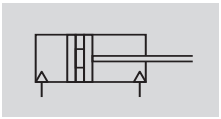 | **803 200 10** | **803 200 25** | **803 200 50** | 20 | M5 |
| | **803 250 10** | **803 250 25** | **803 250 50** | 25 | M5 |
| | **803 320 10** | **803 320 25** | **803 320 50** | 32 | G1/8 |
| | **803 400 10** | **803 400 25** | **803 400 50** | 40 | G1/8 |

| Cyl. Ø mm | AF mm | BG mm | Ø CD$^{H11}$ mm | E mm | EE | KF | LA mm | Ø MM$^{h9}$ mm |
|---|---|---|---|---|---|---|---|---|
| **20** | 10 | 12 | 10 | 37 | M 5 | M 6 | 2,5 | 10 |
| **25** | 10 | 13 | 10 | 41 | M 5 | M 6 | 2,5 | 10 |
| **32** | 12 | 14,5 | 14 | 48 | G 1/8 | M 8 | 2,5 | 12 |
| **40** | 12 | 14,5 | 14 | 54,4 | G 1/8 | M 8 | 2,5 | 16 |

| Cyl. Ø mm | PL mm | R mm | Ø RR mm | RT mm | SW mm | WH mm | ZJ mm | Weight in kg at 0 mm | per 5 mm |
|---|---|---|---|---|---|---|---|---|---|
| **20** | 7 | 22 | 4,3 | M 5 | 8 | 6 | 43 | 0,12 | 0,01 |
| **25** | 7 | 26 | 4,3 | M 5 | 8 | 6 | 45 | 0,15 | 0,01 |
| **32** | 7,5 | 32,5 | 5,3 | M 6 | 10 | 7 | 51 | 0,23 | 0,02 |
| **40** | 7,5 | 38 | 5,3 | M 6 | 13 | 7 | 52 | 0,30 | 0,02 |

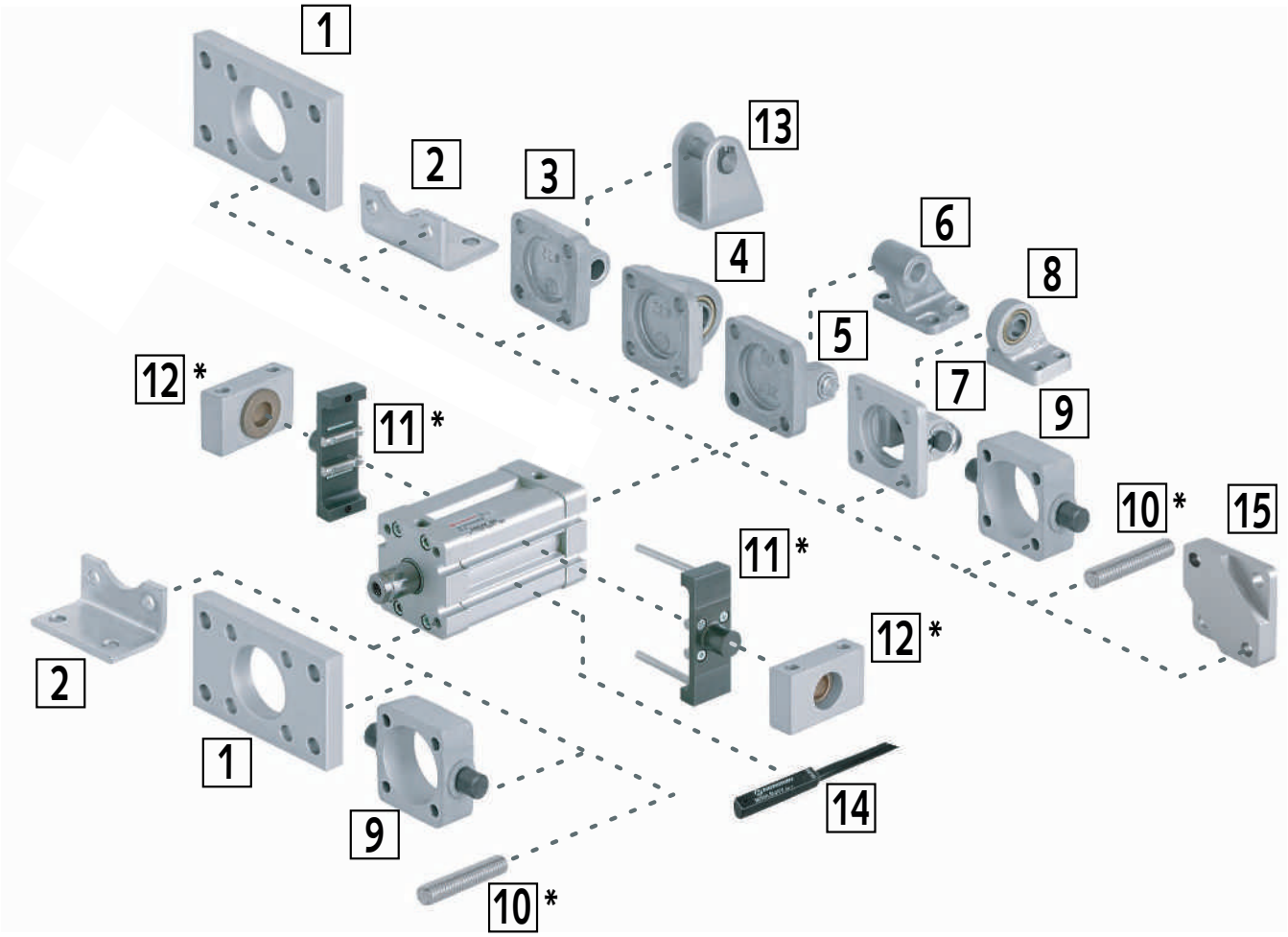


| No. | Designation | Cylinder Ø 20mm Product No. | Cylinder Ø 25mm Product No. | Cylinder Ø 32mm Product No. | Cylinder Ø 40mm Product No. | Dim. Page |
|---|---|---|---|---|---|---|
| 1 | Rear Flange, Front Flange | **810 001 20** | **810 001 25** | **810 001 32** | **810 001 40** | 620 |
| 2 | Foot Plate Mounting | **810 002 20** | **810 002 25** | **810 002 32** | **810 002 40** | 620 |
| 3 | Rear Eye Mounting | **810 004 20** | **810 004 25** | **810 004 32** | **810 004 40** | 620 |
| 4 | Rear Eye Mounting with Spherical Bearing | – | – | **810 012 32** | **810 012 40** | 621 |
| 5 | Rear Clevis Mounting, Wide | – | – | **810 007 32** | **810 007 40** | 621 |
| 6 | Bracket Hinge Mounting, Rigid, Wide for No. 5 | – | – | **810 010 32** | **810 010 40** | 621 |
| 7 | Rear Clevis Mounting Slim | – | – | **810 008 32** | **810 008 40** | 621 |
| 8 | Bracket Hinge Mounting with Spherical Bearing No. 7 | – | – | **810 011 32** | **810 011 40** | 622 |
| 9 | Trunnion Mounting | – | – | **810 013 32** | **810 013 40** | 622 |
| 10 | Front or Rear Stud Mounting * | – | – | **810 006 32*** | **810 006 32*** | - |
| 11 | Adjustable Trunnion Mounting * | – | – | **810 014 32*** | **810 014 40*** | - |
| 12 | Swivel Bearings for No.9 oder No.11 | – | – | **810 015 32** | **810 015 40** | 623 |
| 13 | Bracket Hinge Mounting | **810 023 20** | **810 023 20** | – | – | 624 |

* Discontinued item.

No. 14: Magnetic switches 810 000 01 to 810 000 07 (page 627) can be mounted straight on the keyways of the profile barrel, without further elements.

## Double-Acting Round-Line Cylinders According to ISO 6432 with Magnetic Piston (Buffer Cushioning)

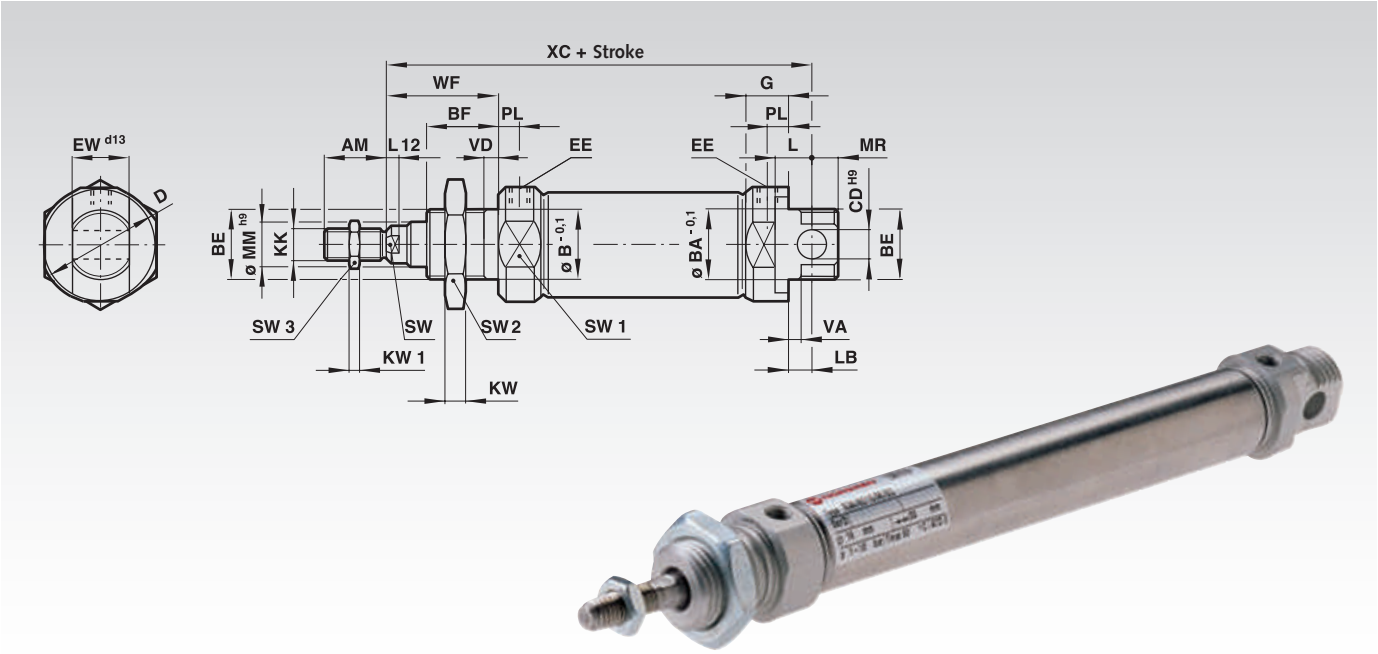


**Materials:** Profile Barrel: Stainless Steel (austenitic).
End Covers: Anodised Aluminium, Piston Rod: Stainless Steel (austenitic), Wiper: Polyurethane, Buffer cushioning: Polyurethane, Seals: Nitrile Rubber.

Medium: Compressed air, filtered, lubricated or non-lubricated.
Standard: ISO 6432.
Mode of Operation: Double-acting with magnetic piston and buffer cushioning.
Operating pressure: 1 to 10 bar.
Operating temperature: max. +80 °C.

**Ordering Details: e.g.: Product No. 805 100 10, Double-Acting Round-Line Cylinder according to ISO 6431 with Magnet Piston, Cylinder Ø 10 mm, Stroke 10 mm**

| Cylinder Ø mm | Theoretical Forces at 6 bar (N) Thrust | Pull |
|---|---|---|
| **10** | 47,1 | 39,6 |
| **12** | 67,8 | 51 |
| **16** | 120 | 104 |
| **20** | 188 | 158 |
| **25** | 294 | 247 |

Symbol

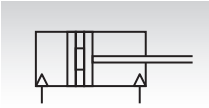

| Product No. Standard Strokes 10 mm | 25 mm | 50 mm | 80 mm | 100 mm | 125 mm | 160 mm | 200 mm | Cylinder Ø mm | Connection |
|---|---|---|---|---|---|---|---|---|---|
| 805 100 10 | 805 100 25 | - | - | - | - | - | - | 10 | M5 |
| 805 120 10 | 805 120 25 | - | - | - | - | - | - | 12 | M5 |
| 805 160 10 | 805 160 25 | 805 160 50 | - | - | - | - | - | 16 | M5 |
| 805 200 10 | 805 200 25 | 805 200 50 | 805 200 80 | 805 201 00 | 805 201 25 | 805 201 60 | 805 202 00 | 20 | G1/8 |
| 805 250 10 | 805 250 25 | 805 250 50 | 805 250 80 | 805 251 00 | 805 251 25 | 805 251 60 | 805 252 00 | 25 | G1/8 |

| Cyl. Ø mm | AM mm | Ø B/BA-0,1 mm | BE | BF mm | ØCDH9 mm | Ø D mm | EE | EW-0,1 mm | G mm | KK | SW2 mm | SW3 mm | KW mm | KW1 mm |
|---|---|---|---|---|---|---|---|---|---|---|---|---|---|---|
| **10** | 12 | 12 | M12x1,25 | 12 | 4 | 16,5 | M5 | 7,9 | 9 | M4 | 19 | 7 | 6 | 2 |
| **12** | 16 | 16 | M16x1,5 | 17 | 6 | 21 | M5 | 11,9 | 9,5 | M6 | 22 | 10 | 5 | 3 |
| **16** | 16 | 16 | M16x1,5 | 17 | 6 | 21 | M5 | 11,9 | 9,5 | M6 | 22 | 10 | 5 | 3 |
| **20** | 20 | 22 | M22x1,5 | 20 | 8 | 30 | G1/8 | 15,9 | 15 | M8 | 27 | 13 | 8 | 4 |
| **25** | 22 | 22 | M22x1,5 | 22 | 8 | 30 | G1/8 | 15,9 | 15 | M10x1,25 | 27 | 17 | 8 | 5 |

| Cyl. Ø mm | L mm | L12 mm | LB mm | ØMMh9 mm | MR mm | PL mm | SW mm | SW1 mm | WF mm | VA/VD mm | XC mm | Weight in kg at 0 mm | per 25 mm |
|---|---|---|---|---|---|---|---|---|---|---|---|---|---|
| **10** | 6 | - | 2 | 4 | 8 | 5,5 | - | 14 | 16 | 1,5 | 64 | 0,034 | 0,007 |
| **12** | 9 | 3 | 3 | 6 | 8 | 5,5 | 5 | 19 | 22 | 2 | 75 | 0,058 | 0,011 |
| **16** | 9 | 3 | 4 | 6 | 7 | 5,5 | 5 | 19 | 22 | 2 | 82 | 0,070 | 0,012 |
| **20** | 12 | 3 | 3 | 8 | 11 | 8 | 7 | 27 | 24 | 2 | 95 | 0,145 | 0,018 |
| **25** | 12 | 4 | 7 | 10 | 9 | 8 | 9 | 27 | 28 | 2 | 104 | 0,200 | 0,028 |

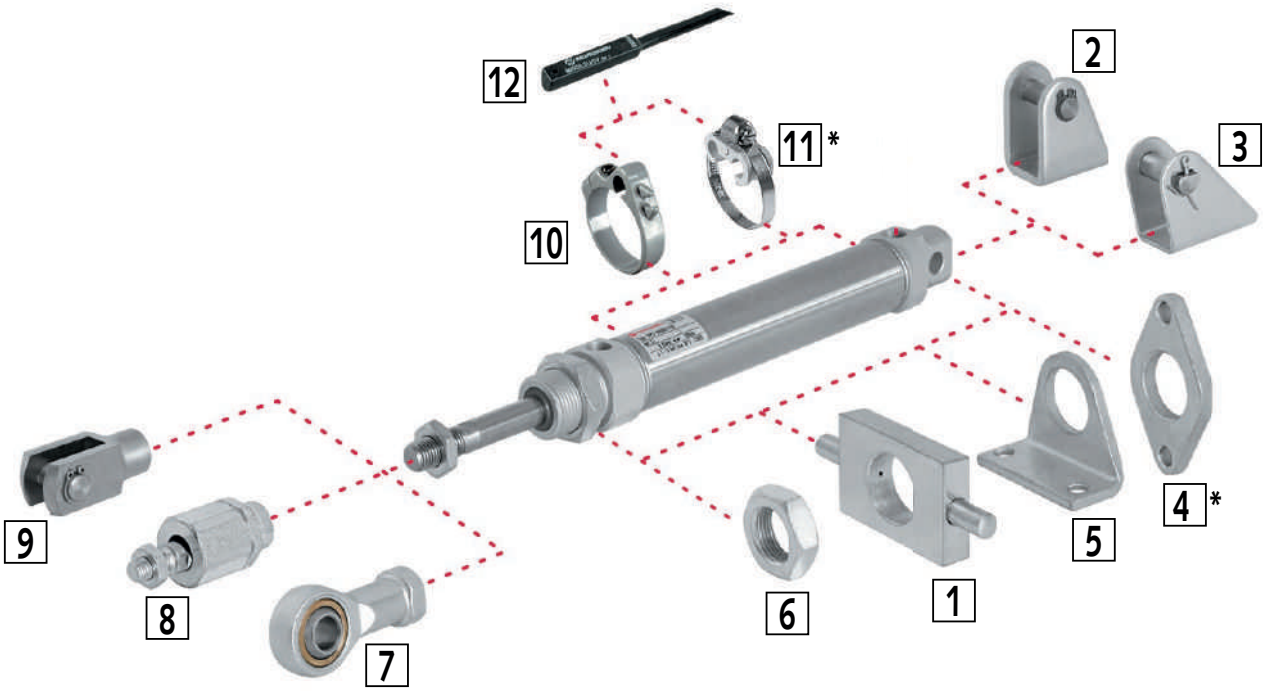


| No. | Designation | Cylinder Ø 10mm Product No. | Cylinder Ø 12mm Product No. | Cylinder Ø 16mm Product No. | Cylinder Ø 20mm Product No. | Cylinder Ø 25mm Product No | Dim. Page* |
|---|---|---|---|---|---|---|---|
| 1 | Trunnion Mounting | – | 810 021 12 | 810 021 12 | 810 021 20 | 810 021 20 | 624 |
| 2 | Bracket Hinge Mounting with Circlip | 810 023 10 | 810 023 12 | 810 023 12 | 810 023 20 | 810 023 20 | 626 |
| 3 | Bracket Hinge Mounting with Split Pin | 810 022 10 | 810 022 12 | 810 022 12 | 810 022 20 | 810 022 20 | 626 |
| 4 | Rear Flange, front Flange* | 810 019 10* | 810 019 12* | 810 019 12* | 810 019 20* | 810 019 20* | - |
| 5 | Foot Plate Mounting | 810 020 10 | 810 020 12 | 810 020 12 | 810 020 20 | 810 020 20 | 625 |
| 6 | Piston Rod Lock Nut | 810 024 10 | 810 024 12 | 810 024 12 | 810 024 20 | 810 024 20 | 625 |
| 7 | Universal Piston Rod Mounting with Spherical Bearing | 810 005 10 | 810 005 12 | 810 005 12 | 810 005 20 | 810 005 25 | 624 |
| 8 | Piston Rod Swivel Mounting | 810 000 10 | 810 000 12 | 810 000 12 | 810 000 20 | 810 000 25 | 624 |
| 9 | Clevis | 810 003 10 | 810 003 12 | 810 003 12 | 810 003 20 | 810 003 25 | 623 |
| 10 | Mounting Bracket for Magnetic Switches ≥ 15mm Stroke | 810 017 10 | 810 017 12 | 810 017 16 | 810 017 20 | 810 017 25 | 625 |
| 11 | Mounting Bracket for Magnetic Switches < 15mm Stroke* | 810 018 10* | 810 018 12* | 810 018 16* | 810 018 20* | 810 018 25* | - |

* Discontinued item.

No. 12: The magnetic switch (product no. 810 000 01 to 810 000 07, page 627) requires the mounting bracket no. 10.

## Rear Flanges, Front Flanges

**Materials:**
Flange: Anodised Aluminium.
Screws: Steel, zinc-plated.

Mounting element at the bearing or end cover.

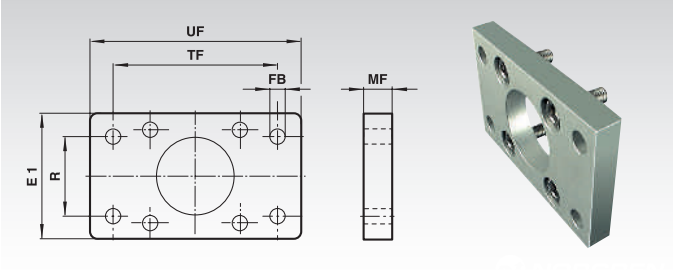


**Ordering Details: e.g.: Product-No. 810 001 20, Rear and Front Flange for Cylinder Ø 20 mm**

| Product No. | Cyl. Ø mm | E1 mm | Ø FB mm | MF mm | R mm | TF mm | UF mm | Weight g |
|---|---|---|---|---|---|---|---|---|
| **810 001 20** | 20 | 36 | 6,6 | 8 | 0* | 55 | 70 | 160 |
| **810 001 25** | 25 | 40 | 6,6 | 8 | 0* | 60 | 76 | 200 |
| **810 001 32** | 32 | 50 | 7 | 10 | 32 | 64 | 80 | 250 |
| **810 001 40** | 40 | 55 | 9 | 10 | 36 | 72 | 90 | 350 |
| **810 001 50** | 50 | 65 | 9 | 12 | 45 | 90 | 110 | 700 |
| **810 001 63** | 63 | 75 | 9 | 12 | 50 | 100 | 125 | 800 |
| **810 001 80** | 80 | 100 | 12 | 16 | 63 | 126 | 154 | 1350 |

* 2 bores on the centre line at a distance TF.

## Foot Plate Mountings

**Materials:**
Mounting: Steel, zinc-plated.
Screws: Steel, zinc-plated.

Mounting element at the bearing and end cover.

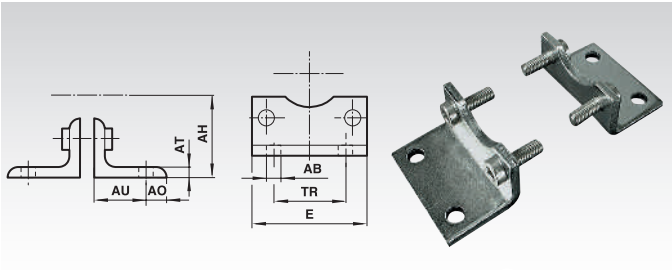


**Ordering Details: e.g.: Product-No. 810 002 20, Foot Plate Mounting for Cylinder Ø 20 mm**

| Product No. | Cyl. Ø mm | Ø AB mm | AH mm | AO mm | AT mm | AU mm | E mm | TR mm | Weight g |
|---|---|---|---|---|---|---|---|---|---|
| **810 002 20** | 20 | 7 | 27 | 6 | 4 | 16 | 36 | 22 | 30 |
| **810 002 25** | 25 | 7 | 29 | 7 | 4 | 16 | 40 | 26 | 40 |
| **810 002 32** | 32 | 7 | 32 | 8 | 4 | 24 | 48 | 32 | 150 |
| **810 002 40** | 40 | 9 | 36 | 9 | 4 | 28 | 53 | 36 | 180 |
| **810 002 50** | 50 | 9 | 45 | 10 | 5 | 32 | 64 | 45 | 300 |
| **810 002 63** | 63 | 9 | 50 | 12 | 5 | 32 | 74 | 50 | 390 |
| **810 002 80** | 80 | 12 | 63 | 19 | 5 | 41 | 98 | 63 | 800 |

## Rear Eye Mountings

**Materials:**
Mounting: Aluminium, die-cast.
Screws: Steel, zinc-plated.

Mounting element at the end cover.

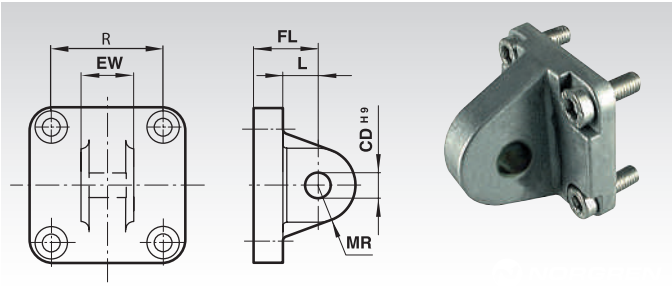


**Ordering Details: e.g.: Product-No. 810 004 20, Rear Eye Mounting for Cylinder Ø 20 mm**

| Product No. | Cyl. Ø mm | Ø CD$^{H9}$ mm | EW mm | FL mm | L mm | MR mm | R mm | Weight g |
|---|---|---|---|---|---|---|---|---|
| **810 004 20** | 20 | 8 | 15,8 | 20 | 14 | 8 | 22 | 20 |
| **810 004 25** | 25 | 8 | 15,8 | 20 | 14 | 8 | 26 | 30 |
| **810 004 32** | 32 | 10 | 25,8 | 22 | 13 | 9 | 32,5 | 90 |
| **810 004 40** | 40 | 12 | 27,8 | 25 | 16 | 12 | 38 | 110 |
| **810 004 50** | 50 | 12 | 31,7 | 27 | 17 | 12 | 46,5 | 170 |
| **810 004 63** | 63 | 16 | 39,7 | 32 | 22 | 15 | 56,5 | 240 |
| **810 004 80** | 80 | 16 | 49,7 | 36 | 22 | 15 | 72 | 370 |

## Rear Eye Mountings with Spherical Bearing

**Materials:**
Mounting: Aluminium, die-cast.
Screws: Steel, zinc-plated
Inner ring: Roller bearing steel, hardened
Outer ring: Steel.

Mounting element at the end cover.

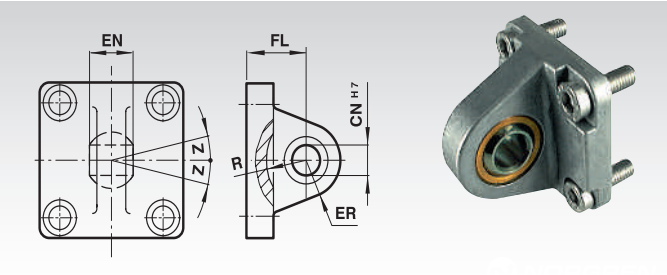


**Ordering Details: e.g.: Product No. 810 012 32, Rear Eye Mounting with Spherical Bearing for Cylinder Ø 32 mm**

| Product No. | Cyl. Ø mm | CN$^{H7}$ mm | EN mm | ER mm | FL mm | R mm | Z Degrees | Weight g |
|---|---|---|---|---|---|---|---|---|
| **810 012 32** | 32 | 10 | 14 | 16 | 22 | 14,5 | 13° | 170 |
| **810 012 40** | 40 | 12 | 16 | 19 | 25 | 18 | 13° | 250 |
| **810 012 50** | 50 | 16 | 21 | 21 | 27 | 19 | 13° | 400 |
| **810 012 63** | 63 | 16 | 21 | 24 | 32 | 24 | 15° | 550 |
| **810 012 80** | 80 | 20 | 25 | 28 | 36 | 24 | 15° | 900 |

## Rear Clevis Mountings, Wide Clevis

**Materials:**
Mounting: Aluminium, die-cast.
Screws: Steel, zinc-plated
Bolts: Stainless Steel.

Mounting element at the end cover.

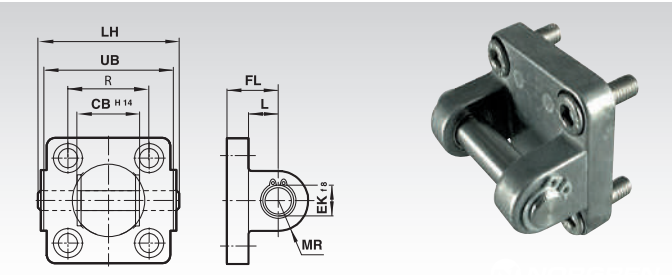


**Ordering Details: e.g.: Product No. 810 007 32, Rear Clevis Mounting Made from Aluminium for Cylinder Ø 32 mm**

| Product No. | Cyl. Ø mm | CB$^{H14}$ mm | EK$^{f8}$ mm | FL mm | L mm | LH mm | MR mm | UB mm | R mm | Weight g |
|---|---|---|---|---|---|---|---|---|---|---|
| **810 007 32** | 32 | 26 | 10 | 22 | 13 | 52 | 9 | 32,5 | 45 | 110 |
| **810 007 40** | 40 | 28 | 12 | 25 | 16 | 60 | 12 | 38 | 52 | 160 |
| **810 007 50** | 50 | 32 | 12 | 27 | 17 | 68 | 12 | 46,5 | 60 | 220 |
| **810 007 63** | 63 | 40 | 16 | 32 | 22 | 79 | 15 | 56,5 | 70 | 340 |
| **810 007 80** | 80 | 50 | 16 | 36 | 22 | 99 | 15 | 72 | 90 | 540 |

## Bracket Hinge Mountings, Rigid, Wide Design (Aluminium), Mating Piece for Clevis Mounting

**Material:**
Aluminium, die-cast.

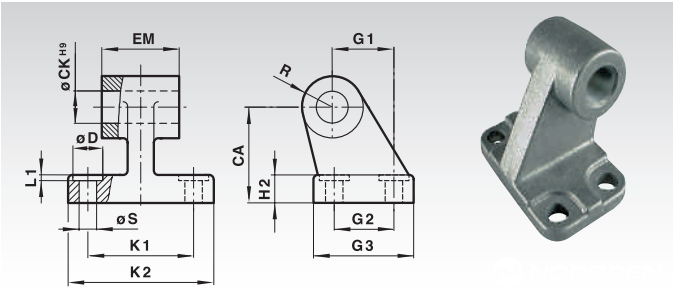


**Ordering Details: e.g.: Product No. 810 010 32, Bracket Hinge Mounting, Rigid, Wide Design, for Cylinder Ø 32 mm**

| Product No. | Cyl. Ø mm | CA mm | CK$^{H7}$ mm | Ø D mm | EM mm | G1 mm | G2 mm | G3 mm | H2 mm | K1 mm | K2 mm | L1 mm | R mm | Ø S mm | Z Degrees | Weight g |
|---|---|---|---|---|---|---|---|---|---|---|---|---|---|---|---|---|
| **810 010 32** | 32 | 32 | 10 | 11 | 26 | 21 | 18 | 31 | 8 | 38 | 51 | 1,6 | 10 | 6,6 | 13° | 150 |
| **810 010 40** | 40 | 36 | 12 | 11 | 28 | 24 | 22 | 35 | 10 | 41 | 54 | 1,6 | 11 | 6,6 | 13° | 200 |
| **810 010 50** | 50 | 45 | 12 | 15 | 32 | 33 | 30 | 45 | 12 | 50 | 65 | 1,6 | 13 | 9 | 13° | 480 |
| **810 010 63** | 63 | 50 | 16 | 15 | 40 | 37 | 35 | 50 | 12 | 52 | 67 | 1,6 | 15 | 9 | 15° | 500 |
| **810 010 80** | 80 | 63 | 16 | 18 | 50 | 47 | 40 | 60 | 14 | 66 | 86 | 2,5 | 15 | 11 | 15° | 750 |

## Rear Clevis Mountings, Slim Clevis

**Materials:**
Mounting: Aluminium.
Screws: Steel, zinc-plated.
Bolts: Stainless Steel.

Mounting element at the end cover.

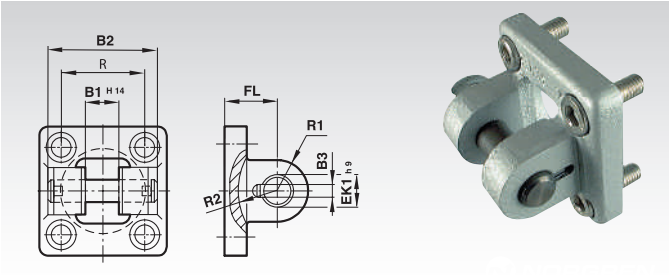


**Ordering Details: e.g.: Product No. 810 008 32, Rear Clevis Mounting for Cylinder Ø 32 mm**

| Product No. | Cyl. Ø mm | $B1^{H14}$ mm | B2 mm | B3 mm | $EK1^{h9}$ mm | FL mm | R mm | R1 mm | R2 mm | Weight g |
|---|---|---|---|---|---|---|---|---|---|---|
| **810 008 32** | 32 | 14 | 34 | 3,3 | 10 | 22 | 32,5 | 11 | 17 | 200 |
| **810 008 40** | 40 | 16 | 40 | 4,3 | 12 | 25 | 38 | 12 | 20 | 230 |
| **810 008 50** | 50 | 21 | 45 | 4,3 | 16 | 27 | 46,5 | 14,5 | 22 | 360 |
| **810 008 63** | 63 | 21 | 51 | 4,3 | 16 | 32 | 56,5 | 18 | 25 | 550 |
| **810 008 80** | 80 | 25 | 65 | 4,3 | 20 | 36 | 72 | 22 | 30 | 900 |

## Bracket Hinge Mountings with Spherical Bearing (Steel) for Slim Clevis

**Materials:**
Bracket hinge: Grey cast iron, coated.
Inner ring: Roller bearing steel, hardened.
Outer ring: Steel.

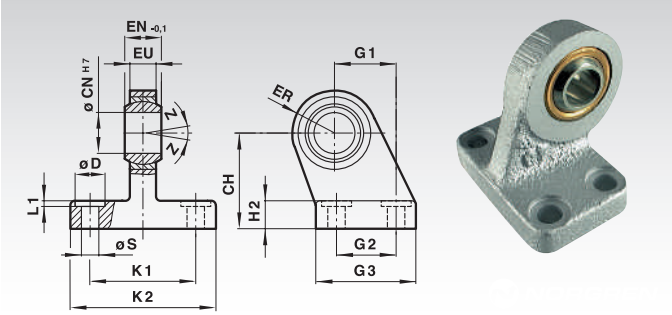


**Ordering Details: e.g.: Product No. 810 011 32, Bracket Hinge Mounting, with Spherical Bearing, for Cylinder Ø 32 mm**

| Product No. | Cyl. Ø mm | CH mm | $CN^{H7}$ mm | Ø D mm | $EN^{-0.1}$ mm | ER mm | EU mm | G1 mm | G2 mm | G3 mm | H2 mm | K1 mm | K2 mm | L1 mm | Ø S mm | Z Degrees | Weight g |
|---|---|---|---|---|---|---|---|---|---|---|---|---|---|---|---|---|---|
| **810 011 32** | 32 | 32 | 10 | 11 | 14 | 16 | 10,5 | 21 | 18 | 31 | 8 | 38 | 51 | 1,6 | 6,6 | 13° | 190 |
| **810 011 40** | 40 | 36 | 12 | 11 | 16 | 18 | 12 | 24 | 22 | 35 | 10 | 41 | 54 | 1,6 | 6,6 | 13° | 240 |
| **810 011 50** | 50 | 45 | 16 | 15 | 21 | 21 | 15 | 33 | 30 | 45 | 12 | 50 | 65 | 1,6 | 9 | 13° | 460 |
| **810 011 63** | 63 | 50 | 16 | 15 | 21 | 23 | 15 | 37 | 35 | 50 | 12 | 52 | 67 | 1,6 | 9 | 15° | 590 |
| **810 011 80** | 80 | 63 | 20 | 18 | 25 | 28 | 18 | 47 | 40 | 60 | 14 | 66 | 86 | 2,5 | 11 | 15° | 1030 |

## Trunnion Mountings (front or rear)

**Materials:**
Mounting: Grey cast iron.
Screws: Steel, zinc-plated.

Mounting element at the bearing or end cover.

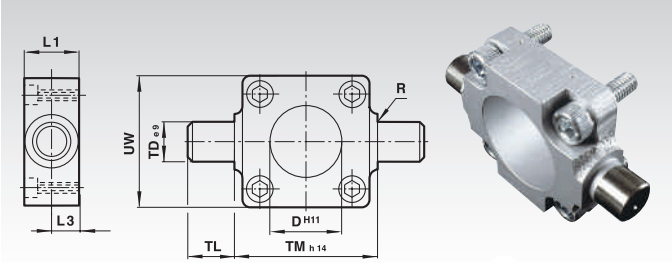


**Ordering Details: e.g.: Product No. 810 013 32, Trunnion Mounting for Cylinder Ø 32 mm**

| Product No. | Cyl. Ø mm | $ØD^{H11}$ mm | L1 mm | L3 mm | R mm | $ØTD^{e9}$ mm | TL mm | $TM^{h14}$ mm | UW1 mm | Weight g |
|---|---|---|---|---|---|---|---|---|---|---|
| **810 013 32** | 32 | 30 | 16 | 8 | 1,0 | 12 | 12 | 50 | 50 | 200 |
| **810 013 40** | 40 | 35 | 20 | 10 | 1,6 | 16 | 16 | 63 | 55 | 380 |
| **810 013 50** | 50 | 40 | 24 | 12 | 1,6 | 16 | 16 | 75 | 65 | 600 |
| **810 013 63** | 63 | 45 | 24 | 12 | 1,6 | 20 | 20 | 90 | 75 | 1100 |
| **810 013 80** | 80 | 45 | 28 | 14 | 1,6 | 20 | 20 | 110 | 100 | 1900 |

## Swivel Bearings

**Materials:**
Mounting: Steel.
Bearing: Sintered bronze.

Mounting Element for Trunnion Mounting.
2 bearings included in the delivery.

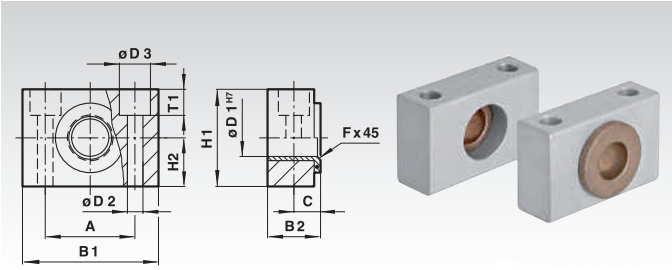


**Ordering Details: e.g.: Product No. 810,015 32, Swivel Bearing for Trunnion Mounting for Cylinder Ø 32 mm**

| Product No. | Cyl. Ø mm | A mm | B1 mm | B2 mm | C mm | Ø D1 mm | Ø D2 mm | Ø D3 mm | fx45° mm | H1 mm | H2 mm | T1 mm | Weight g |
|---|---|---|---|---|---|---|---|---|---|---|---|---|---|
| **810 015 32** | 32 | 32 | 46 | 18 | 10,5 | 12 | 6,6 | 11 | 1,0 | 30 | 15 | 6,8 | 110 |
| **810 015 40** | 40/50 | 36 | 55 | 21 | 12 | 16 | 9 | 15 | 1,6 | 36 | 18 | 9 | 160 |
| **810 015 63** | 63/80 | 42 | 65 | 23 | 13 | 20 | 11 | 18 | 1,6 | 40 | 20 | 11 | 230 |

## Clevises

**Materials::**
Mounting: Steel, zinc-plated.
Bolts: Steel, zinc-plated.

Mounting element at the piston rod.

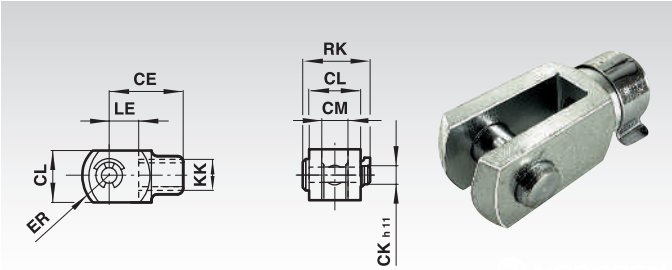


**Ordering Details: e.g.: Product-No. 810 003 10, Clevis for Cylinder Ø 10 mm**

| Product No. | Cyl. Ø mm | Thread KK | CE mm | CK$^{h11}$ mm | CL mm | CM mm | ER mm | LE mm | RK mm | Weight g |
|---|---|---|---|---|---|---|---|---|---|---|
| **810 003 10** | 10 | M4 | 16 | 4 | 8 | 4 | 6,5 | 8 | 11,5 | 10 |
| **810 003 12** | 12/16 | M6 | 24 | 6 | 12 | 6 | 9,5 | 12 | 17,5 | 20 |
| **810 003 20** | 20 | M8 | 32 | 8 | 16 | 8 | 13 | 16 | 22 | 60 |
| **810 003 25** | 25/32 | M10x1,25 | 40 | 10 | 20 | 10 | 16 | 20 | 28 | 100 |
| **810 003 40** | 40 | M12x1,25 | 48 | 12 | 24 | 12 | 19 | 24 | 32 | 30 |
| **810 003 50** | 50/63 | M16x1,5 | 64 | 16 | 32 | 16 | 25 | 32 | 41,5 | 330 |
| **810 003 80** | 80 | M20x1,5 | 80 | 20 | 40 | 20 | 32 | 40 | 50 | 670 |

## Bracket Hinge Mounting, Rigid, Slim (Cast), Mating Piece for Clevis Mounting

**Material:**
Grey cast iron, coated.

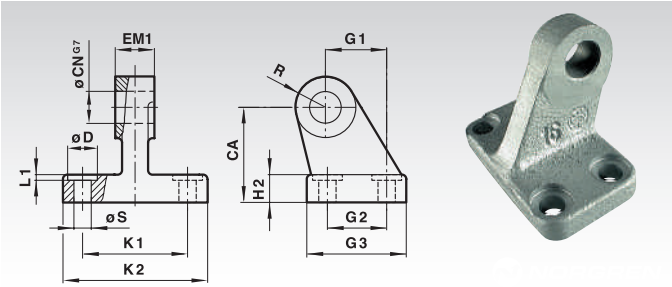


**Ordering Details: e.g.: Product No. 810 009 32, Bracket Hinge Mounting, Rigid, Slim Design, for Cylinder Ø 32 mm**

| Product No. | Cyl. Ø mm | CA mm | CN$^{G7}$ mm | Ø D mm | EM1 mm | G1 mm | G2 mm | G3 mm | H2 mm | K1 mm | K2 mm | L1 mm | R mm | Ø S mm | Z Degrees | Weight g |
|---|---|---|---|---|---|---|---|---|---|---|---|---|---|---|---|---|
| **810 009 32** | 32 | 32 | 10 | 11 | 10 | 21 | 18 | 31 | 8 | 38 | 51 | 1,6 | 10 | 6,6 | 13° | 50 |
| **810 009 40** | 40 | 36 | 12 | 11 | 12 | 24 | 22 | 35 | 10 | 41 | 54 | 1,6 | 11 | 6,6 | 13° | 70 |
| **810 009 50** | 50 | 45 | 16 | 15 | 16 | 33 | 30 | 45 | 12 | 50 | 65 | 1,6 | 13 | 9 | 13° | 140 |
| **810 009 63** | 63 | 50 | 16 | 15 | 16 | 37 | 35 | 50 | 12 | 52 | 67 | 1,6 | 15 | 9 | 15° | 180 |
| **810 009 80** | 80 | 63 | 20 | 18 | 20 | 47 | 40 | 60 | 14 | 66 | 86 | 2,5 | 15 | 11 | 15° | 280 |

## Universal Piston Rod Mountings with Spherical Bearing

**Materials:**
Mounting: Steel, zinc-plated.
Inner ring: Roller bearing steel, hardened.
Outer ring: Brass.

Mounting element at the piston rod.

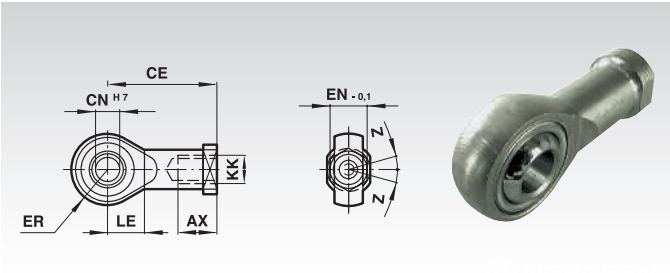


**Ordering Details: e.g.: Product-No. 810 005 10, Universal Piston Rod Mounting for Cylinder Ø 10 mm**

| Product No. | Cyl. Ø mm | Thread KK | AX mm | CE mm | CN$^{H7}$ mm | EN$^{-0.1}$ mm | ER mm | LE mm | Z Degrees | Weight g |
|---|---|---|---|---|---|---|---|---|---|---|
| **810 005 10** | 10 | M4 | 14 | 27 | 5 | 8 | 6,5 | 10 | 5° | 20 |
| **810 005 12** | 12/16 | M6 | 14 | 30 | 6 | 9 | 9,5 | 11 | 5° | 20 |
| **810 005 20** | 20 | M8 | 16 | 36 | 8 | 12 | 11 | 13 | 5° | 50 |
| **810 005 25** | 25/32 | M10x1,25 | 20 | 43 | 10 | 14 | 14 | 15 | 13° | 90 |
| **810 005 40** | 40 | M12x1,25 | 22 | 50 | 12 | 16 | 16 | 17 | 13° | 130 |
| **810 005 50** | 50/63 | M16x1,5 | 28 | 64 | 16 | 21 | 21 | 22 | 15° | 330 |
| **810 005 80** | 80 | M20x1,5 | 33 | 77 | 20 | 25 | 25 | 26 | 15° | 670 |

## Piston Rod Swivel Mountings

**Materials:**
Housing: Steel, zinc-plated.
Bolt: Steel, hardened.
Nut: Steel, zinc-plated.

Mounting element at the piston rod.

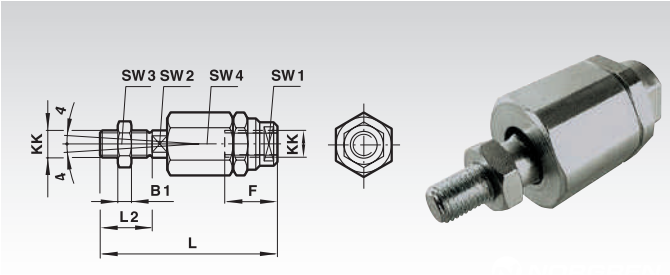


**Ordering Details: e.g.: Product-No. 810 000 10, Piston Rod Swivel Mounting for Cylinder Ø 10 mm, Thread M4**

| Product No. | Cyl. Ø mm | Thread KK | B1 mm | F mm | L mm | L2 mm | SW1 mm | SW2 mm | SW3 mm | SW4 mm | Weight g |
|---|---|---|---|---|---|---|---|---|---|---|---|
| **810 000 10** | 10 | M4 | 2 | 12,5 | 33 | 8 | 11 | 3,2 | 7 | 11 | 15 |
| **810 000 12** | 12/16 | M6 | 3 | 14 | 39 | 12 | 7 | 5 | 10 | 13 | 24 |
| **810 000 20** | 20 | M8 | 4 | 18 | 55 | 16 | 10 | 7 | 13 | 17 | 54 |
| **810 000 25** | 25/32 | M10x1,25 | 5 | 26 | 73 | 20 | 19 | 12 | 17 | 30 | 233 |
| **810 000 40** | 40 | M12x1,25 | 6 | 26 | 77 | 24 | 19 | 12 | 19 | 30 | 200 |
| **810 000 50** | 50/63 | M16x1,5 | 8 | 34 | 106 | 32 | 30 | 19 | 24 | 42 | 650 |
| **810 000 80** | 80 | M20x1,5 | 10 | 42 | 122 | 40 | 30 | 19 | 30 | 42 | 720 |

## Trunnion Mountings

**Materials:**
Mounting: Steel, zinc-plated.
Bolts: Steel, zinc-plated.

Mounting element at the bearing or end cover.

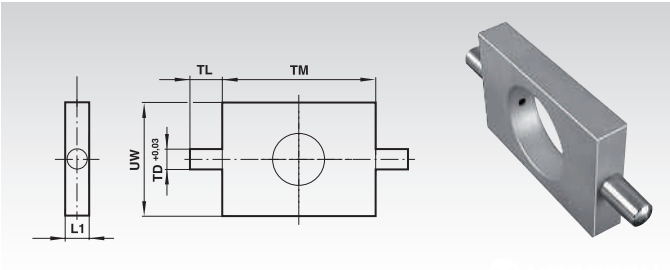


**Ordering Details: e.g.: Product-No. 810 021 12, Trunnion Mounting for Cylinder Ø 12/16 mm**

| Product No. | Cyl. Ø mm | L1 mm | TD$^{+0,03}$ mm | TL mm | TM mm | UW mm | Weight g |
|---|---|---|---|---|---|---|---|
| **810 021 12** | 12/16 | 8 | 6 | 10 | 38 | 25 | 51 |
| **810 021 20** | 20/25 | 8 | 6 | 10 | 46 | 30 | 67 |

## Foot Plate Mountings

**Material:**
Steel, zinc-plated.

Mounting element at the bearing or end cover.

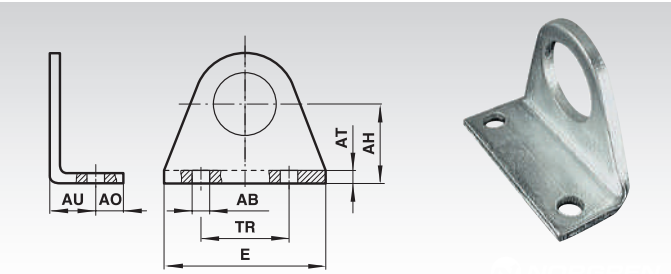


**Ordering Details: e.g.: Product-No. 810 020 10, Foot Plate Mounting for Cylinder Ø 10 mm**

| Product No. | Cyl. Ø mm | AB mm | AH mm | AO mm | AT mm | AU mm | E mm | TR mm | Weight g |
|---|---|---|---|---|---|---|---|---|---|
| **810 020 10** | 10 | 4,5 | 16 | 6 | 2 | 10 | 35 | 25 | 20 |
| **810 020 12** | 12/16 | 5,5 | 20 | 6 | 3 | 13 | 43 | 32 | 30 |
| **810 020 20** | 20/25 | 6,6 | 25 | 7,5 | 4 | 16 | 53 | 40 | 50 |

## Nuts for the Piston Rod Bearing

**Material:**
Steel, zinc-plated.

Mounting element at the bearing or end cover.

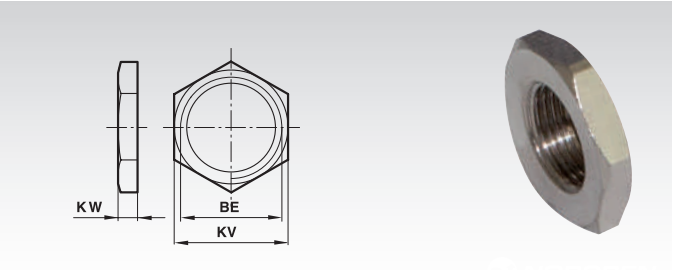


**Ordering Details: e.g.: Product-No. 810 024 10, Nut on Piston Rod Bearing for Cylinder Ø 10 mm**

| Product No. | Cyl. Ø mm | BE | KV mm | KW mm | Weight g |
|---|---|---|---|---|---|
| **810 024 10** | 10 | M12x1,25 | 19 | 6 | 10 |
| **810 024 12** | 12/16 | M16x1,5 | 22 | 5 | 9 |
| **810 024 20** | 20/25 | M22x1,5 | 27 | 8 | 17 |

## Mounting Elements for Magnetic Switch at Profile Barrel for ≥ 15 mm Stroke

**Materials:**
Mounting: Plastic.
Screw: Steel, zinc-plated.

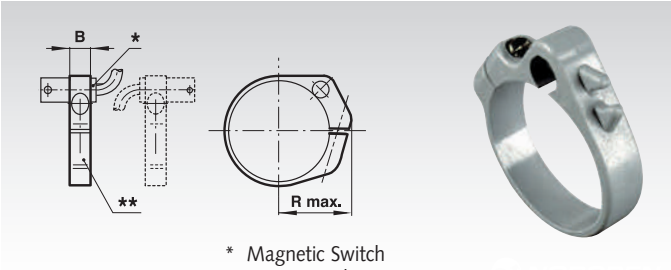


* Magnetic Switch
**Mounting Element

**Ordering Details: e.g.: Product No. 810 017 10, Mounting Elements for Magnetic Switch ≥ 15 mm Stroke for Cylinder Ø 10 mm**

| Product No. | Cyl. Ø mm | B mm | R max. mm | Weight g |
|---|---|---|---|---|
| **810 017 10** | 10 | 8 | 16 | 3 |
| **810 017 12** | 12 | 8 | 18 | 4 |
| **810 017 16** | 16 | 10 | 20 | 6 |
| **810 017 20** | 20 | 10 | 22 | 6 |
| **810 017 25** | 25 | 10 | 24 | 7 |

## Bracket Hinge Mountings with Circlip

**Materials:**
Mounting: Steel, zinc-plated.
Bolts: Stainless Steel.

Mating bracket for rear end mounting.

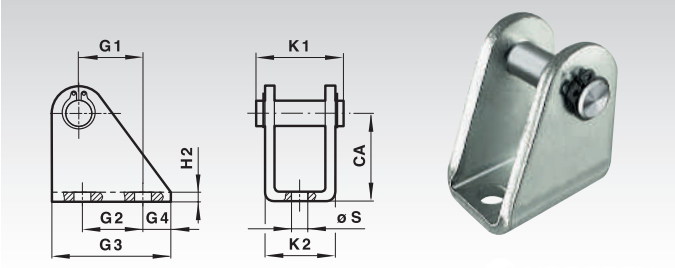


**Ordering Details: e.g.: Product No. 810,023 10, Bracket Hinge, Rear with Circlip for Cylinder Ø 10 mm**

| Product No. | Cyl. Ø mm | Bolt Ø mm | CA mm | G1 mm | G2 mm | G3 mm | G4 mm | H2 mm | K1 mm | K2 mm | Ø S mm | Weight g |
|---|---|---|---|---|---|---|---|---|---|---|---|---|
| **810 023 10** | 10 | 4 | 24 | 11 | 12,5 | 20 | 4 | 2,5 | 17,5 | 13 | 4,5 | 18 |
| **810 023 12** | 12/16 | 6 | 27 | 13 | 15 | 25 | 5 | 3 | 23 | 18 | 5,5 | 35 |
| **810 023 20** | 20/25 | 8 | 30 | 16 | 20 | 32 | 6 | 4 | 29,5 | 24 | 6,6 | 77 |

## Bracket Hinge Mountings with Split Pin

**Materials:**
Mounting: Steel, zinc-plated.
Bolts: Stainless Steel.

Mating bracket for rear end mounting.

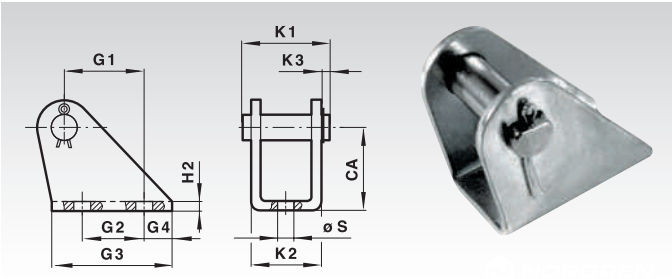


**Ordering Details: e.g.: Product No. 810 022 10, Bracket Hinge, Rear with Split Pin for Cylinder Ø 10 mm**

| product No. | Cyl. Ø mm | Bolt Ø mm | CA mm | G1 mm | G2 mm | G3 mm | G4 mm | H2 mm | K1 mm | K2 mm | K3 mm | Ø S mm | Weight g |
|---|---|---|---|---|---|---|---|---|---|---|---|---|---|
| **810 022 10** | 10 | 4 | 12 | 6,5 | - | 15 | 6 | 1 | 13,5 | 10,5 | 2 | 4,8 | 5 |
| **810 022 12** | 12/16 | 6 | 20 | 18,5 | 15 | 30 | 8 | 1,5 | 20 | 15 | 3 | 5,5 | 20 |
| **810 022 20** | 20/25 | 8 | 25 | 20 | 15 | 35 | 10 | 2 | 25 | 20,5 | 3 | 6,6 | 40 |

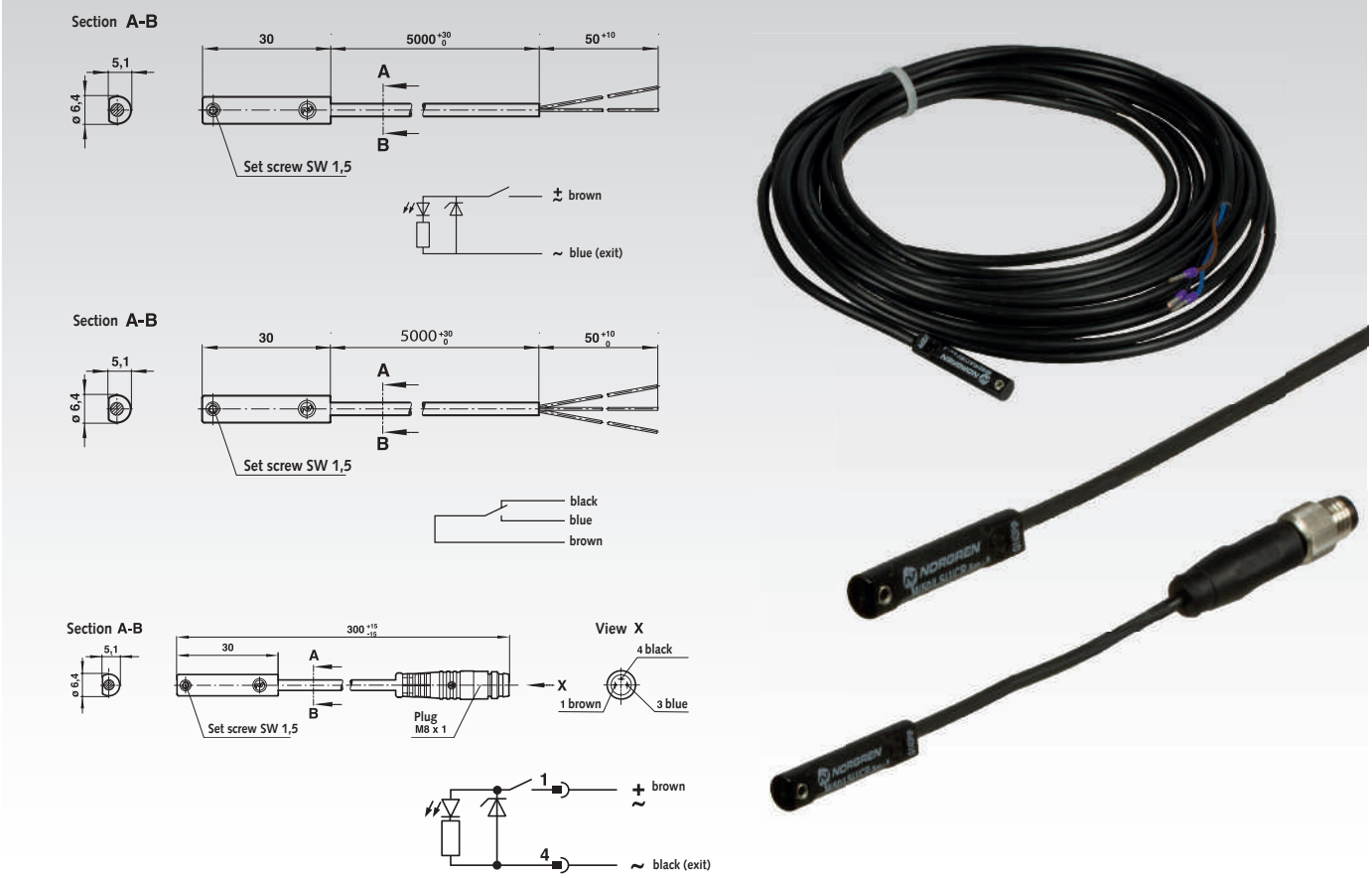


**Materials:**
Housing: Plastic. Cable: PVC 2 x 0.25, PVC 3 x 0.25.
Mode of operation: N/O with LED (yellow), change over contact without LED.
Switching Voltage (Ub):10 to 240 V AC/170 V DC.
Switching Voltage output: Ub - 2.7 V.
Switching current (see graph): 0.18 A max.
Switching power: 10 W/10 VA max.

Note: Switch life may be greatly reduced if the maximum values for contact load, switching current and switching voltage are exceeded.

Contact resistance: 150 mW.
Response time: 1.8 ms.
Operating temperature: -20°C to +80°C.
Protection rating: IP 66 (DIN 40050).
Shock resistance: 50 g (during 11 ms).
Vibration resistance: 35 g (at 2000 Hz).

**Ordering details: e.g.: Product No. 810 000 01, Magnetic Switch, N/O, 2 m cable**

| Product No. | Function | Cable Length m | Weight g |
|---|---|---|---|
| 810 000 01 | N/O, without Plug | 5 | 92 |
| 810 000 02 | Change-over, without Plug | 5 | 92 |
| 810 000 03 | N/O, with Plug | 0,3 | 16 |

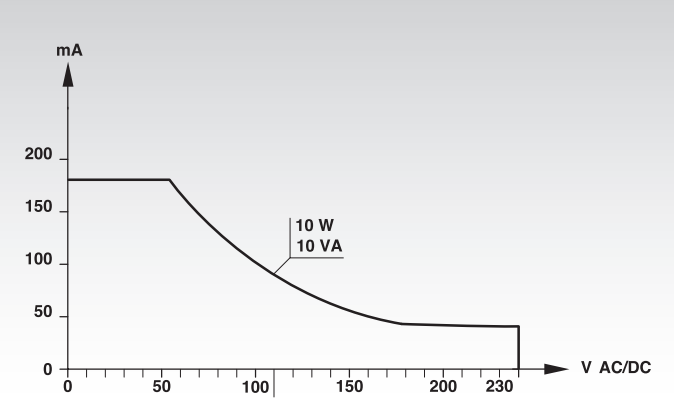

## Plug-In Connector Cable for Prod.-No. 810 000 03

**Material:** PVC 3 x 0.25.

| Product No. | Cable Length m | Weight g |
|---|---|---|
| 810 000 00 | 5 | 150 |

## Magnetic Switch, Solid State

### Product No. 810 000 04

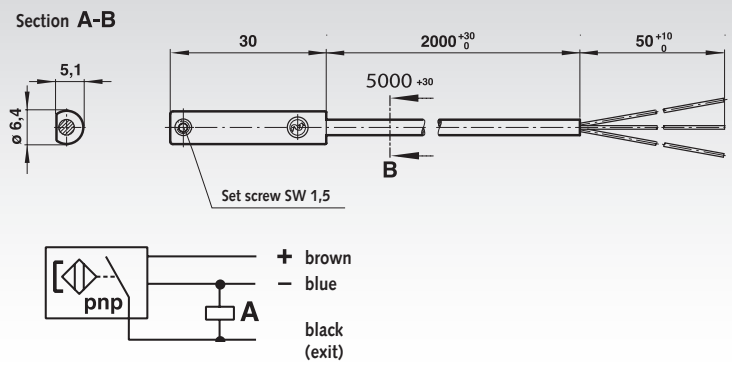

### Product No. 810 000 06

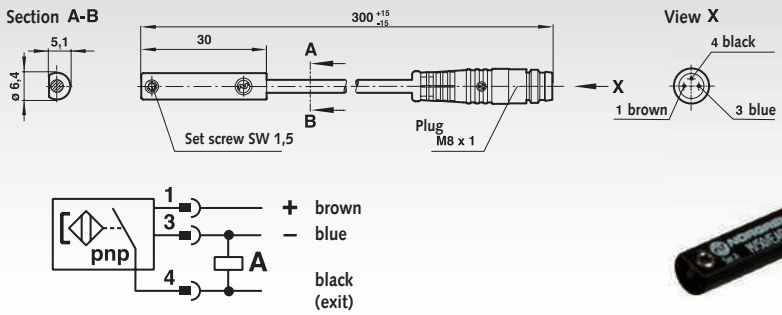

**Materials:**
Housing Plastic, EMC according to EN 60947-5-2.
Cable: PVC 3 x 0.25.

Mode of Operation: Output with LED (yellow).
Switching voltage (Ub): 10 to 30 V DC.
Switching voltage output: Ub - 2 V.
Induced voltage: 0.5 V.
Switching Current (see Graph): max. 150 mA.
Switching power: max. 4.5 W.
Response time: < 0.5 ms.
Operating frequency: 5 kHz.
Operating temperature: -20°C to +80°C.
Protection rating: IP 67 (DIN 40050).
Cable length: 2 m.

**Ordering Details: e.g.: Product No. 810 000 04, Magnetic Switch without plug**

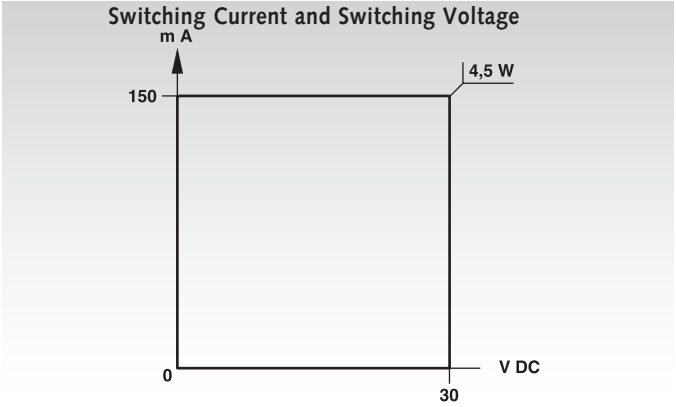


### Magnetic Switch

| Product No. | Function | Cable length m | Weight g |
|---|---|---|---|
| **810 000 04** | pnp, without plug | 5 | 92 |
| **810 000 06** | pnp, with plug | 0,3 | 16 |

### Plug-in connector cable for Prod.-No. 810 000 06 / 810 000 07

**Material:** PVC 3 x 0.25.

| Product No. | Cable length m | Weight g |
|---|---|---|
| **810 000 00** | 5 | 150 |

## 2/2 Solenoid Valves DN 10, Short Version, Nominal diameter 10 mm

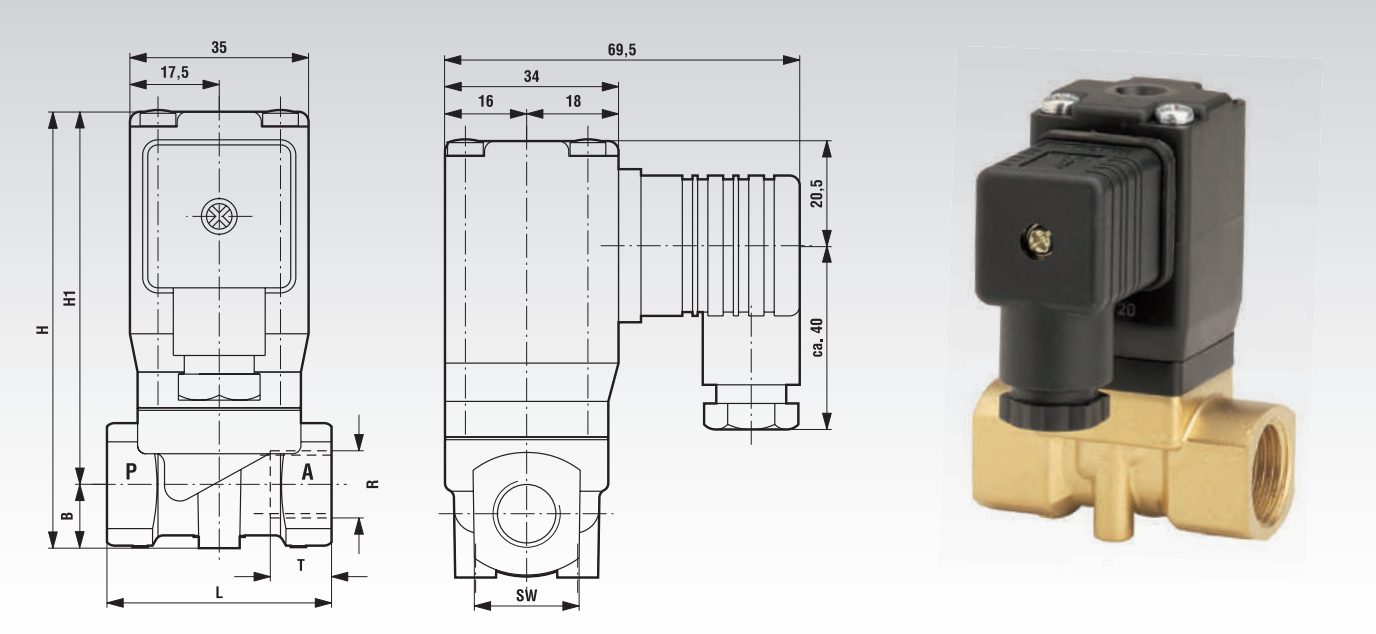


**Material:**
Housing: Brass, PA66.
Seat seal: NBR (Perbunan).
Internal parts: 1.4104, 1.4303, PVDF.

- For neutral gaseous and liquid fluids.
- Electromagnetically actuated valve, with forced valve lifting.
- Diaphragm valves.
- Connection internal thread G1/4 to G1/2.
- Operating pressure 0 to 10 bar (up to 25 $mm^2/s$ cSt).

For contaminated fluids insertion of a strainer is recommended.

**Description** (standard unit):
Solenoid valve for, e.g., air , water, oil.
Switching function: Normally closed.
Flow direction: determined.
Fluid temperature: -10°C to +90°C.
Ambient temperature: -10 °C to +50°C.
Mounting position: optional, preferably solenoid vertical on top.

**Features**
- Suitable for vacuum.
- Clear design.
- Compact solenoid with integrated core tube.
- Valve works without minimum pressure difference (Zero ΔP).
- Operating pressure 0 - 20 bar with alternating voltage and NBR seal.

Symbol

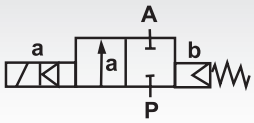


**Ordering details: e.g.: Product No., Voltage, Connection**

| Product No. | Voltage | Connection (Thread) | B mm | H mm | H1 mm | L mm | SW mm | T mm | kv-Value* Base $m^3/h$ | Weight kg |
|---|---|---|---|---|---|---|---|---|---|---|
| **851 114 11** | 24V DC | G1/4 | 14 | 87 | 73 | 44 | 21 | 12 | 1,5 | 0,5 |
| **851 114 12** | 230V 50/60Hz | G1/4 | 14 | 87 | 73 | 44 | 21 | 12 | 1,5 | 0,5 |
| **851 138 11** | 24V DC | G3/8 | 14 | 87 | 73 | 44 | 21 | 12 | 1,7 | 0,5 |
| **851 138 12** | 230V 50/60Hz | G3/8 | 14 | 87 | 73 | 44 | 21 | 12 | 1,7 | 0,5 |
| **851 112 11** | 24V DC | G1/2 | 14 | 90 | 74,5 | 60 | 27 | 15 | 1,7 | 0,6 |
| **851 112 12** | 230V 50/60Hz | G1/2 | 14 | 90 | 74,5 | 60 | 27 | 15 | 1,7 | 0,6 |

* Cv-Value (US) = kv-Value x 1.2.

### Power consumption

According to DIN VDE 0580 at a coil temperature of +20°C. At operating state temperature of the solenoid (DC) the power consumption decreases, for physical reasons by up to approx. 30%.

| DC | AC Inrush | AC Holding |
|---|---|---|
| 12 W | 20 VA | 16 VA |

### Magnet

Design according to VDE 0580.
Voltage range ±10%.
100% duty cycle.
Protection class acc. to EN 60529 IP65.
Socket acc. to DIN EN 175301-803 (in accessory box).

## 2/2 Solenoid Valves, DN 20 and DN 25, Standard Version

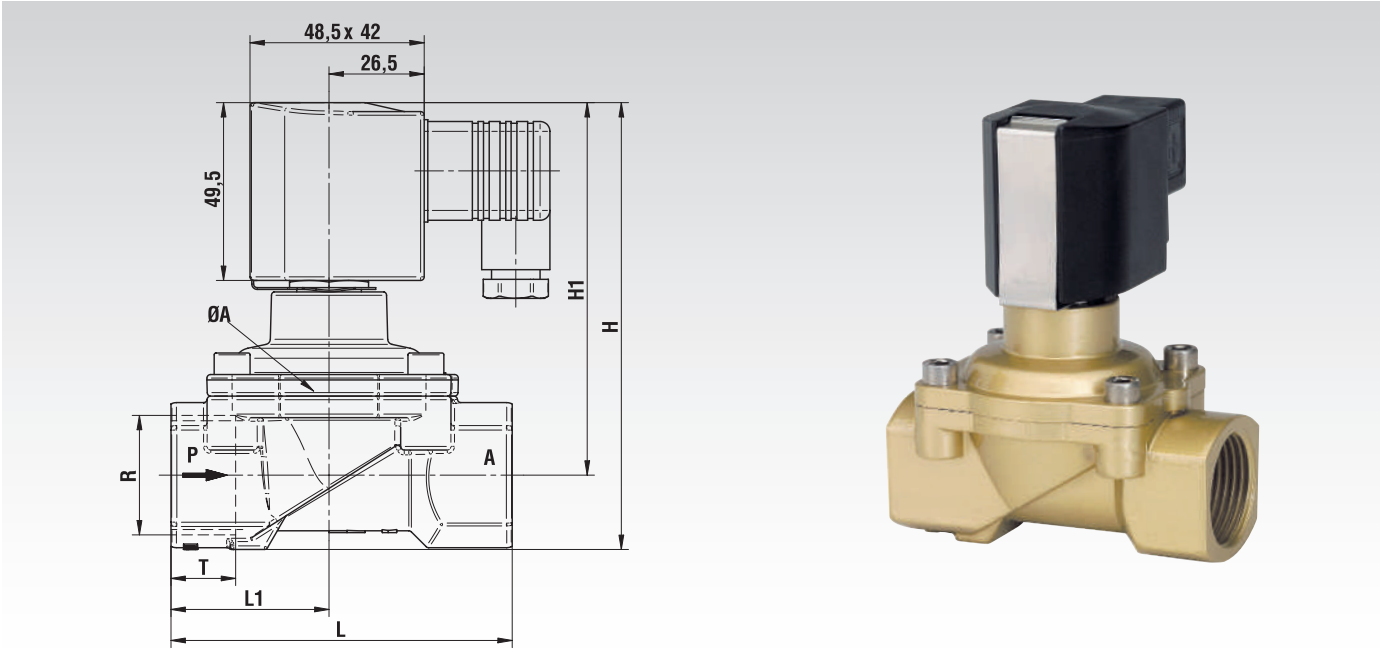


**Material:**
Housing: Brass.
Seat seal: NBR (Perbunan).
Internal parts: Stainless steel, PVDF, Brass.

- For neutral gaseous and liquid fluids.
- Electromagnetically actuated valve, with forced valve lifting.
- Diaphragm valves.
- Connection internal thread G3/4 and G1.
- Operating pressure 0 to 10 bar (up to 25 $mm^2/s$ cSt).

For contaminated fluids insertion of a strainer is recommended.

**Description (standard unit)**
Solenoid valve for, e.g., air , water, oil.
Switching function: Normally closed.
Flow direction: determined.
Fluid temperature: -10°C to max. +90°C.
Ambient temperature: -10°C to max. +50°C.
Mounting position: optional, preferably solenoid vertical on top.

**Features**
- High flow rate.
- For rugged applications.
- Damped operation.
- Suitable for vacuum.
- For systems with low or changing pressure difference.
- Valve works without minimum pressure difference (Zero ΔP).
- Solenoid can be replaced without tools.

Symbol

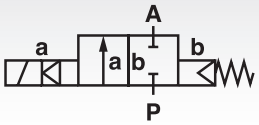


**Ordering details: e.g.: Product No., Voltage, Connection**

| Product No. | Voltage | Connection (Thread) | Nominal Ø mm | ØA mm | H mm | $H_1$ mm | L mm | $L_1$ mm | T mm | kv-Value* Base $m^3/h$ | Weight kg |
|---|---|---|---|---|---|---|---|---|---|---|---|
| **851 234 11** | 24V DC | G3/4 | 20 | 50 | 115 | 99 | 80 | 36,5 | 16 | 5,8 | 1,00 |
| **851 234 12** | 230V 50/60Hz | G3/4 | 20 | 50 | 115 | 99 | 80 | 36,5 | 16 | 5,8 | 1,00 |
| **851 210 11** | 24V DC | G1 | 25 | 62 | 124 | 103,5 | 95 | 44 | 18 | 8,0 | 1,30 |
| **851 210 12** | 230V 50/60Hz | G1 | 25 | 62 | 124 | 103,5 | 95 | 44 | 18 | 8,0 | 1,30 |

* Cv-Value (US) = kv-Value x 1.2.

### Power consumption

According to DIN VDE 0580 at a coil temperature of +20°C. At operating state temperature of the solenoid (DC) the power consumption decreases, for physical reasons by up to approx. 30%.

| DC | AC Inrush | AC Holding |
|---|---|---|
| 18 W | 20 VA | 18 VA |

Note: For explosion-proof solenoids (on request) the permissible temperature range decreases.

### Magnet

Design according to VDE 0580.
Voltage range ±10%.
100% duty cycle.
Protection class acc. to EN 60529 IP65.
Socket acc. to DIN EN 175301-803 A (in accessory box).

## 3/2 Solenoid Valves, Single Pilot, Normally closed

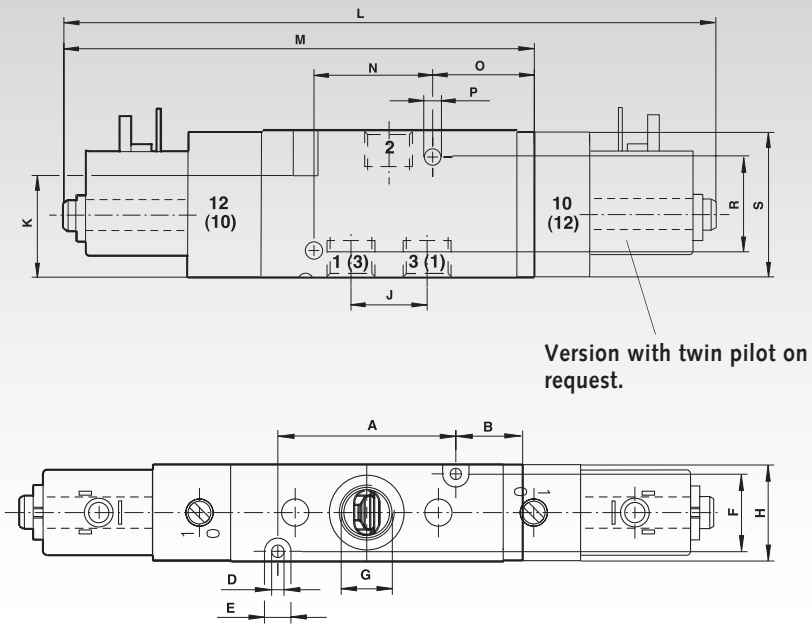


Version with twin pilot on request.

**Materials:**
Housing and base plates: Aluminium, Spindle: Stainless steel; Piston, spacers and cover: Plastic; Static and dynamic seals: NBR; Screws: zinc-plated; Springs: Stainless Steel.

Standard pilot controls with replaceable solenoid system for all common voltages.

The valves are suitable for lubricated or non-lubricated standard compressed air.

At normal operating conditions the system has a lifespan of 50 million switching cycles.

The valve system (cartridge) is an optimised version of the million-times proven sealing system. Manual override with detent.

Symbol

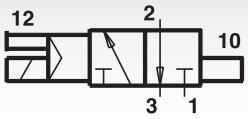


**Ordering Details: e.g.: Product No. 850 118 11, 3/2 Solenoid Valve, Connecting Thread G 1/8, Voltage 24 V**

| Product No. | Connection | Voltage | Flow (l/min) | Operating pressure (bar) | Weight g | Product No. Socket* | Product No. Spare Solenoid* |
|---|---|---|---|---|---|---|---|
| **850 118 11** | G 1/8 | 24V DC | 750 | 2 - 8 | 220 | **858 000 01** | **858 000 06** |
| **850 118 12** | G 1/8 | 230V 50/60Hz | 750 | 2 - 8 | 220 | **858 000 01** | **858 000 07** |
| **850 128 11** | G 1/4 | 24V DC | 1300 | 2 - 8 | 290 | **858 000 01** | **858 000 06** |
| **850 128 12** | G 1/4 | 230V 50/60Hz | 1300 | 2 - 8 | 290 | **858 000 01** | **858 000 07** |

* See page 633.

| Dim. | A | B | C | D | E | F | G | H | J | K | L | M | N | O | P | R | S | T | U |
|---|---|---|---|---|---|---|---|---|---|---|---|---|---|---|---|---|---|---|---|
| **G1/8** | 35 | 16 | – | 3,2 | 6,5 | 17 | G1/8 | 22 | 16,2 | 28 | - | 114 | 25 | 25 | 4,5 | 26 | 35 | – | – |
| **G 1/4** | 46 | 18 | – | 3,2 | 6,5 | 20 | G1/4 | 25 | 21 | 28 | - | 130 | 32 | 29 | 4,5 | 26 | 40 | – | – |

### Solenoid and Voltage Selection

22mm solenoid with plug interface according to DIN 43650 Form B.

Voltage: 24V DC.
Solenoid power inrush/holding: 2W.

Voltage: 230V 50/60Hz.
Solenoid power inrush/holding: 6/5VA.

## 5/2 Solenoid Valves, Single and Twin Pilot

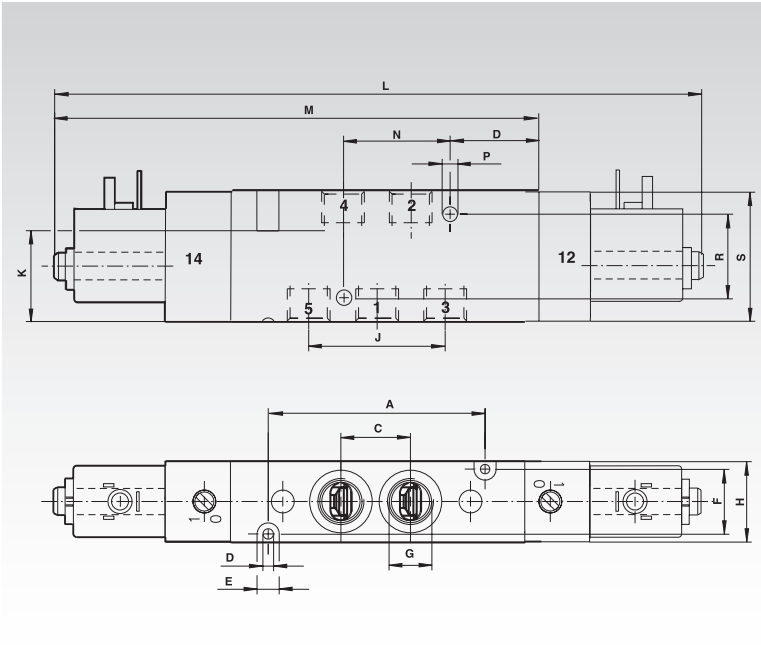


Single pilot

Double pilot

**Materials:**
Housing and base plates: Aluminium, Spindle: Stainless steel; Piston, spacers and cover: Plastic; Static and dynamic seals: NBR; Screws: zinc-plated; Springs: Stainless Steel.

Standard pilot controls with replaceable solenoid system for all common voltages.

The valves are suitable for lubricated or non-lubricated standard compressed air.

At normal operating conditions the system has a lifespan of 50 million switching cycles.

The valve system (cartridge) is an optimised version of the million-times proven sealing system. Manual override with detent.

Symbol

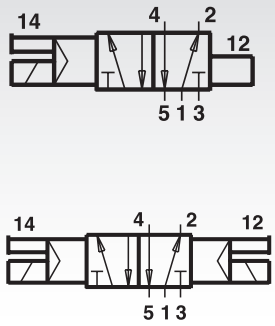


**Ordering Details: e.g.: Product No. 850 318 11, 5/2 Solenoid Valve, Connecting Thread G 1/8, Voltage 24 V, Single Pilot**

| Product No. single pilot | Product No. twin pilot | Connection | Voltage | Flow (l/min) | Operating pressure (bar) | Weight g | Product No. Socket* | Product No. Spare Solenoid* |
|---|---|---|---|---|---|---|---|---|
| **850 318 11** | **850 418 11** | G 1/8 | 24V DC | 750 | 2 - 8 | 240 | **858 000 01** | **858 000 06** |
| **850 318 12** | **850 418 12** | G 1/8 | 230V 50/60Hz | 750 | 2 - 8 | 240 | **858 000 01** | **858 000 07** |
| **850 328 11** | **850 428 11** | G 1/4 | 24V DC | 1300 | 2 - 8 | 330 | **858 000 01** | **858 000 06** |
| **850 328 12** | **850 428 12** | G 1/4 | 230V 50/60Hz | 1300 | 2 - 8 | 330 | **858 000 01** | **858 000 07** |

* See page 633.

| Dim. | Design | A | B | C | D | E | F | G | H | J | K | L | M | N | O | P | R | S | T | U |
|---|---|---|---|---|---|---|---|---|---|---|---|---|---|---|---|---|---|---|---|---|
| G 1/8 | Rest Position | 50 | 16 | 16,2 | 3,2 | 6,5 | 17 | G1/8 | 22 | 32,4 | 28 | – | 129 | 25 | 25 | 4,5 | 26 | 35 | – | – |
| G 1/4 | Rest Position | 66 | 1821 | | 3,2 | 6,5 | 20 | G1/4 | 25 | 42 | 28 | – | 150 | 32 | 29 | 4,5 | 26 | 40 | – | – |

### Solenoid and Voltage Selection

22 mm solenoid with plug interface according to DIN 43650 Form B.

Voltage: 24V DC.
Solenoid power inrush/holding: 2W.

Voltage: 230V 50/60Hz.
Solenoid power inrush/holding: 6/5VA.

## 5/3 Solenoid Valves, with twin pilot

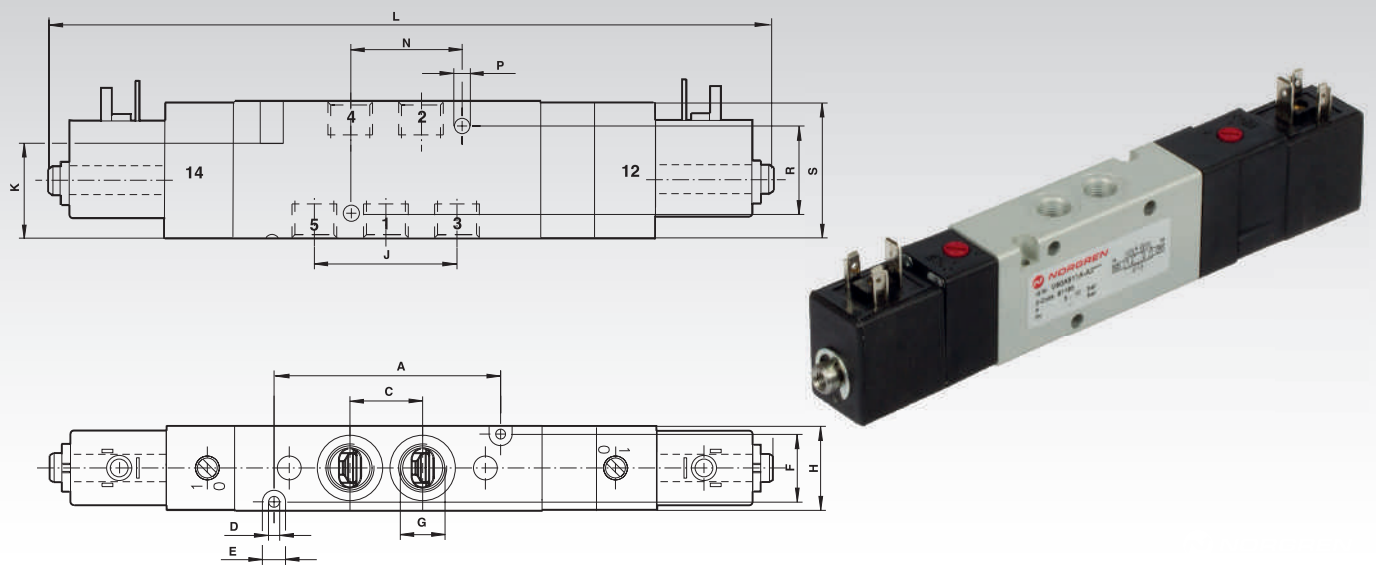


**Materials:**
Housing and base plates: Aluminium, Spindle: Stainless Steel;
Piston, spacers and cover: Plastic; Static and dynamic seals: NBR;
Screws: zinc-plated;
Springs: Stainless Steel.

Standard pilot controls with replaceable solenoid system for all common voltages.

The valves are suitable for lubricated or non-lubricated standard compressed air.

At normal operating conditions the system has a lifespan of 50 million switching cycles.

The valve system (cartridge) is an optimised version of the million-times proven sealing system. Manual override with detent.

### Version A: Rest position: all connections locked

Symbol

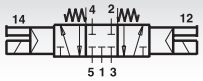


### Version B: Rest position: Connection 2 and 4 relieved

Symbol

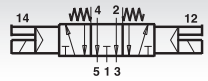


**Ordering Details: e.g.: Product No. 850 518 11, 5/3 Solenoid Valve, Connecting Thread G 1/8, Voltage 24 V**

| Product No. Version A | Product No. Version B | Connection | Voltage | Flow (l/min) | Operating pressure (bar) | Weight g | Product No. Socket* | Product No. Spare Solenoid* |
|---|---|---|---|---|---|---|---|---|
| **850 518 11** | **850 618 11** | G 1/8 | 24V DC | 500 | 3 - 8 | 350 | **858 000 01** | **858 000 06** |
| **850 518 12** | **850 618 12** | G 1/8 | 230V 50/60Hz | 500 | 3 - 8 | 350 | **858 000 01** | **858 000 07** |
| **850 528 11** | **850 628 11** | G 1/4 | 24V DC | 950 | 3 - 8 | 470 | **858 000 01** | **858 000 06** |
| **850 528 12** | **850 628 12** | G 1/4 | 230V 50/60Hz | 950 | 3 - 8 | 470 | **858 000 01** | **858 000 07** |

* See below.

| Dim. | A | B | C | D | E | F | G | H | J | K | L | M | N | O | P | R | S | T | U |
|---|---|---|---|---|---|---|---|---|---|---|---|---|---|---|---|---|---|---|---|
| **G1/8** | 50 | – | 16,2 | 3,2 | 6,5 | 17 | G1/8 | 22 | 32,4 | 28 | 189 | – | 25 | – | 4,5 | 26 | 35 | – | – |
| **G 1/4** | 66 | – | 21 | 3,2 | 6,5 | 20 | G1/4 | 25 | 42 | 28 | 217 | – | 32 | – | 4,5 | 26 | 40 | – | – |

### Solenoid and Voltage Selection

22 mm solenoid with plug interface according to DIN 43650 Form B.

Solenoid can be turned in steps of 90°.

Voltage: 24V DC ± 10%.
Solenoid power inrush/holding: 2W.

Voltage: 230V ± 10%, 50/60Hz.
Solenoid power inrush/holding: 6/5VA.

Duty cycle: 100% ED.

Protection rating: IP 65 with sealed connectors (ISO 6952).

### Socket according to DIN 43650, without Cable

**Material:** Polyamide.
Weight: 20 g.

**Product No.**

**858 000 01**

### Spare Solenoids according to DIN 43650

Weight: 63 g.

| Product No. | 24 V DC |
|---|---|
| **858 000 06** | |
| **Product No.** | **230 V 50/60 Hz** |
| **858 000 07** | |

## Product No. 830 001 00

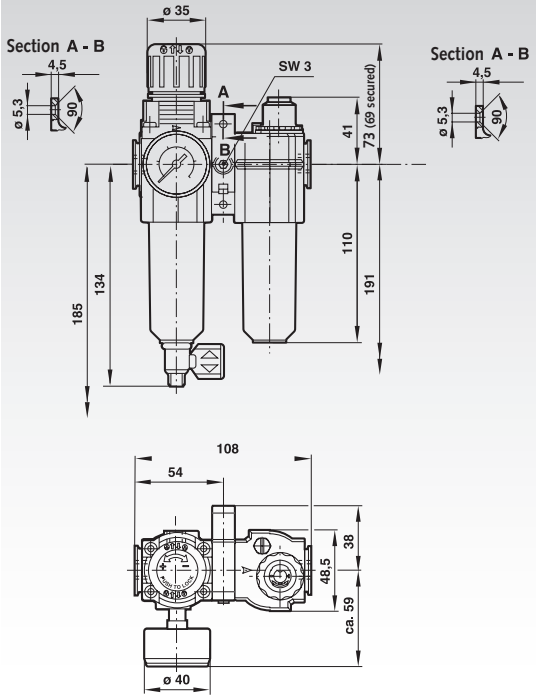


## Product No. 830 003 00

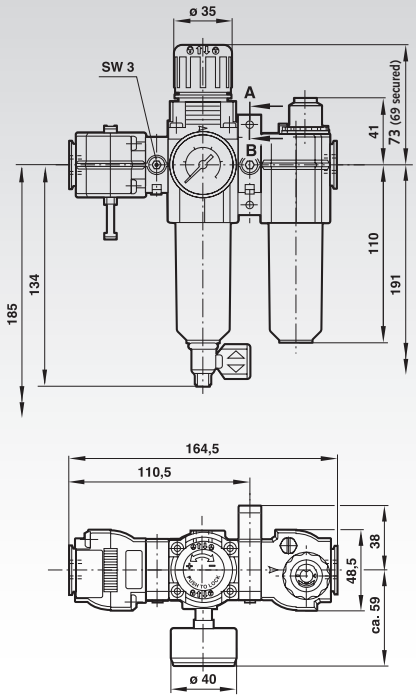

**Materials:**
Bowl: Polycarbonate.
Housing: Zinc die-cast.
O-ring seals: synthetic elastomers.
Filter element: Polypropylene.

Medium: Compressed Air.
Operating temperature: -20°C to +65°C.
For temperatures below +2°C please take the air properties into account.

Operating pressure: max. 10 bar.
Pressure range: 0.3 to 10 bar.
Relief valve: Standard with relief valve.
Pressure Gauge: Standard.
Filter element: 40 µm standard.
Bowl size (oiler): 0.04 litre.
Max. flow: 13 l/s (connection G1/4, inlet pressure 10 bar.
Set pressure: 6.3 bar, Δp = 1 bar).
Draining: Manual.
Oiler version: Micro-fog oiler.

**Ordering Details: e.g.: Product No. 830 001 00, Air Preparation Unit without Shut-Off Valve**

| Symbol | Product No. | Connection | Shut-off valve | Weight g |
|---|---|---|---|---|
| 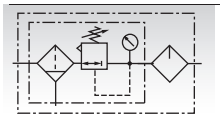 | **830 001 00** | G 1/4 | without | 1122 |
| | **830 003 00** | G 1/4 | with | 1415 |

**Air preperation equipment consists of Shutt-off Valve, Filter-Regulator and Micro-fog Oiler**

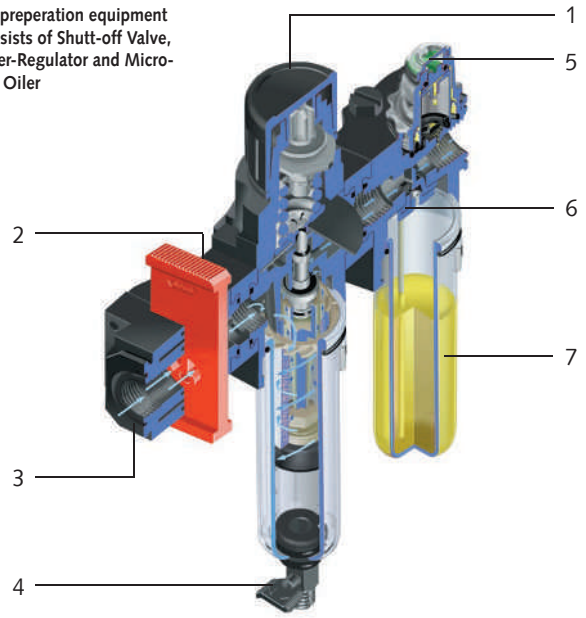


The patented Quikclamps® allows the equipment to be used in individual or modular installations. The Quikclamp®-Connection Set also allows the mounting and maintenance of individual units without removing the tubes. Equipment like pressure regulators can be easily mounted in four different operation levels.

1 Push-to-lock adjusting knob.
2 Easy mounting and maintenance due to Quikclamp®.
3 3/2-way shut-off valve – compact, lockable, with relief function.
4 Easy handling for manual draining of condensate.
5 Lubricator sight-feed dome simplifies adjustment and readability of the oil drip rate.
6 Micro-fog oiler produces a fine oil fog – ideal for long and complex pipeworks.
7 Quick release bayonet bowl.

## Pressure Regulator (with Relief Function)

**Materials:**
Housing: Zinc die-cast.
End covers: Acetal.
Valve: Brass.
O-ring seals: Synthetic elastomers.

Medium: Compressed air.
Operating pressure: Max. 20 bar.
Pressure range: 0.3 to 10 bar as standard.
Relieving Operation: Relief function as standard.
Max. flow: 33 l/s (connection G1/4, inlet pressure 10 bar, set pressure: 6.3 bar, Δp = 1 bar).

**Ordering details: e.g.: Product No. 830 005 00, Pressure Regulator with Relief Valve, Connection G1/4**

| Symbol | Product No. | Connection | Weight g |
|---|---|---|---|
| | **830 005 00** | G1/4 | 360 |

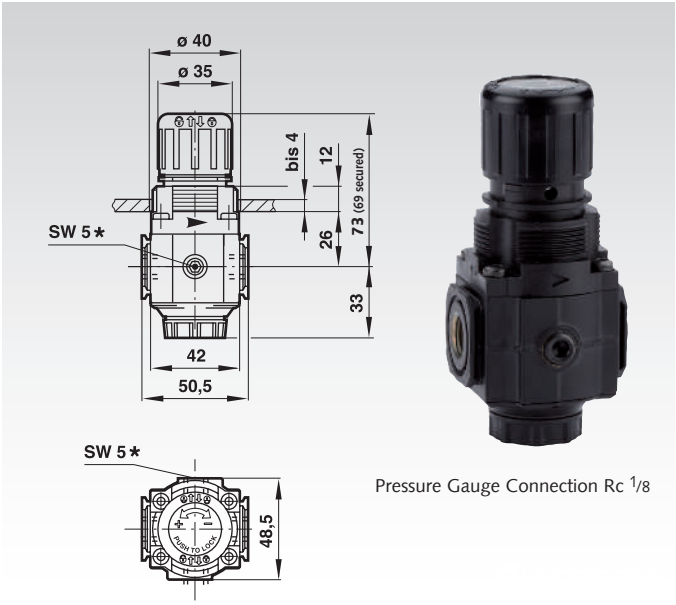


Pressure Gauge Connection Rc 1/8

## Compressed-Air Filter

**Materials:**
Bowl: Polycarbonate.
Housing: Zinc die-cast.
O-ring seals: Synthetic elastomers.
Filter element: Polypropylene.

Medium: Compressed air.
Operating pressure: Max. 10 bar.
Max. flow: 28 l/s (Connection G 1/4).
Operating pressure = 6.3 bar.
Δp = 0.5 bar.
Filter element 40 µm.
Draining: Manual as standard.

**Ordering details: e.g.: Product No. 830 007 00, Compressed-Air Filter with Manual Draining, Connection G 1/4**

| Symbol | Product No. | Connection | Weight g |
|---|---|---|---|
| | **830 007 00** | G 1/4 | 490 |

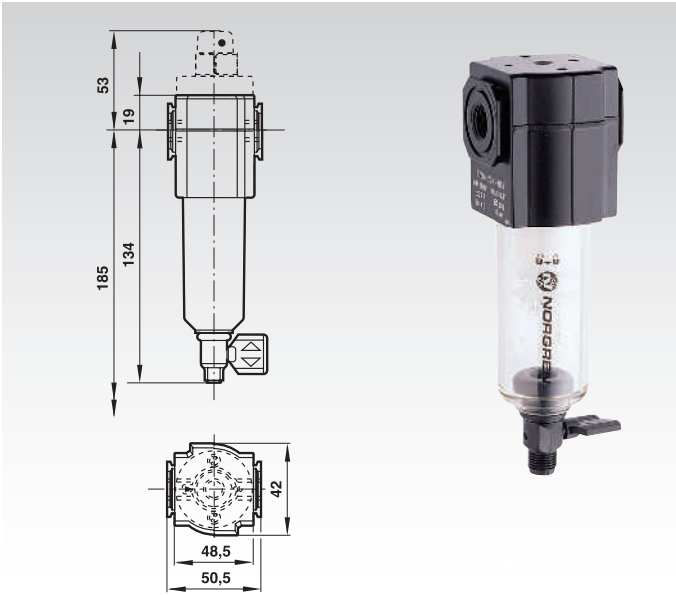

## Filter / Regulators

**Materials:**
Bowl: Polycarbonate.
Housing: Zinc die-cast.
O-ring seals: synthetic elastomers.
Filter element: Polypropylene.

Medium: Compressed Air.
Operating pressure: max. 10 bar.
Filter element: 40 µm standard.
Draining: Manual.
Pressure range: 0.3 to 10 bar as standard.
Relief valve: Standard with relief valve.
Max. flow: 38 l/s (connection G1/4, inlet pressure 10 bar,
Set pressure 6.3 bar, Δp = 1 bar, filter element 40 µm).

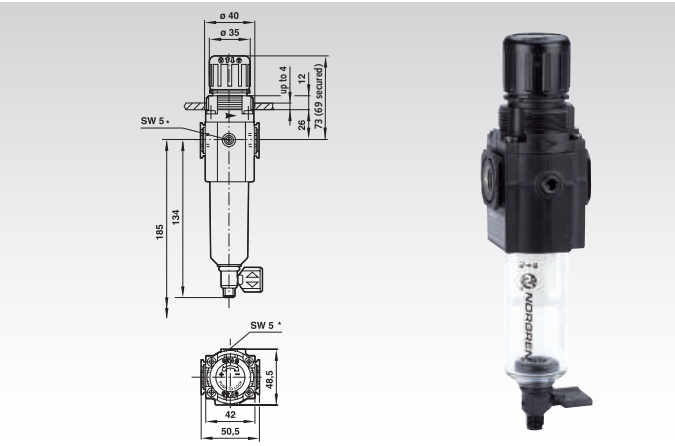


**Ordering Details: e.g.: Article No. 830 011 00, Filter/ Regulator with Manual Draining**

| Symbol | Product No. | Connection | Weight g | Product No. Spare filter |
|---|---|---|---|---|
| 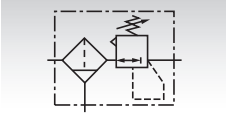 | **830 011 00** | G1/4 | 520 | **830 007 01** |

## Micro-Fog or Standard Fog Oilers

**Materials:**
Bowl: Polycarbonate.
Housing: Zinc die-cast.
O-ring seals: synthetic elastomers.
Sight-feed dome: Polycarbonate.

Medium: Compressed Air.
Operating pressure: max. 10 bar.
Bowl size: 0.04 litre.
Flow: 0.47 l/s to 24 l/s*.
*Max. value (connection G 1/4, inlet pressure = 6.3 bar, Δp = 0.5 bar).

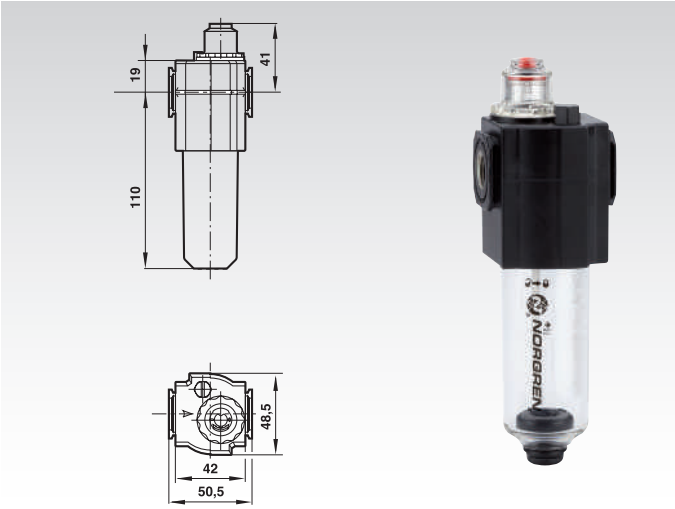


**Ordering Details: e.g.: Product No. 830 013 00, Micro-Fog Oiler**

| Symbol | Product No. | Connection | Type | Weight g |
|---|---|---|---|---|
| 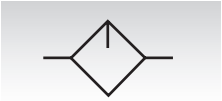 | **830 013 00** | G1/4 | Micro-fog oiler | 490 |
| | **830 015 00** | G1/4 | Standard Fog Oiler | 490 |

## Pressure Relief Valve

**Materials:**
Housing: Zinc die-cast.
End cover: Acetal.
O-ring seals: synthetic elastomers.

Medium: Compressed Air.
Operating pressure: max. 17 bar.
Pressure range: 0.3 to 10 bar as standard.

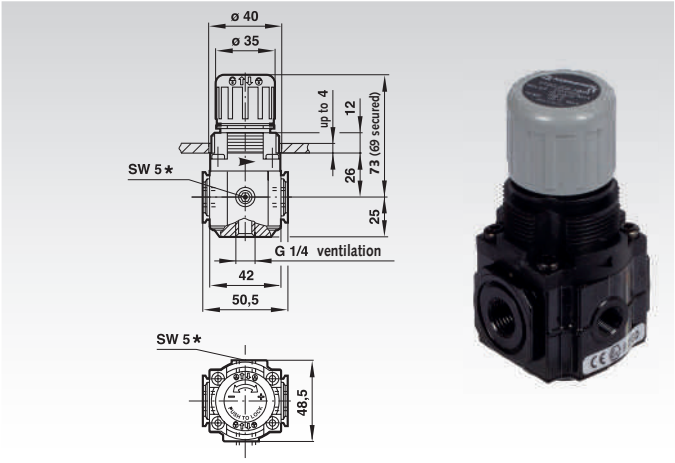


**Ordering Details: e.g.: Product No. 830 017 00, Pressure Relief Valve**

| Symbol | Product No. | Connection | Weight g |
|---|---|---|---|
| 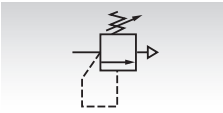 | **830 017 00** | G1/4 | 330 |

## 3/2 Way Shut-Off Valve (manual)

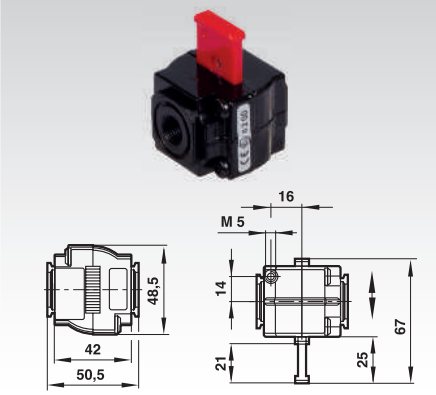


**Materials:**
Housing: Zinc die-cast.
Slider: Plastic:

| Symbol | Product No. | Connection | Weight g |
|---|---|---|---|
| 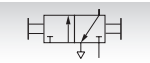 | 830 022 00 | G1/4 | 293 |

## Universal Mounting Bracket

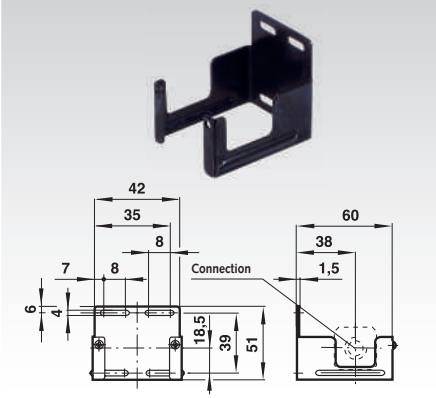


**Material:**
Steel.

| Product No. | Weight g |
|---|---|
| 830 031 00 | 49 |

## Universal Mounting Bracket

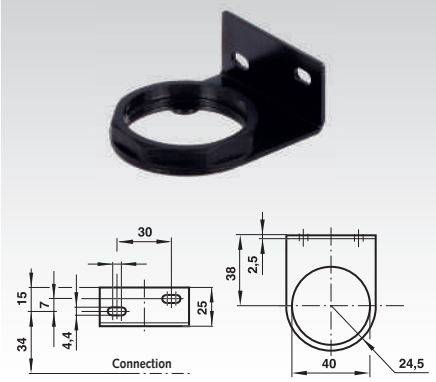


**Materials:**
Nut: Plastic: Bracket: Steel.

| Product No. | Weight g |
|---|---|
| 830 033 00 | 72 |

## Panel Mounting Nut

**Material:**
Plastic:

| Product No. | Weight g |
|---|---|
| 830 035 00 | 3 |

## Pressure Gauge

**Materials:** Housing, viewing glass: Plastic.
Connecting thread: Brass.
Operating pressure: 0-10 bar. T = -20°C to 60°C

| Product No. | Connection | Ø mm | Weight g |
|---|---|---|---|
| 830 037 00 | R1/8 | 40 | 43 |

**Secure hold and unproblematic multiple mounting, due to high-quality grab ring.**

**Mounting holes for wall mounting*.**

**O-Ring seals with parallel threads (G).**

**PTFE-free pre-applied thread sealant with taper threads (R).**

**Internal hexagons on all straight fittings offer easy mounting.**

**Colour codings for improved safety*.**

**Red release rings for quick identification of metric tube sizes*.**

**O-ring seals made from silicone-free Nitrile rubber.**

*** Only for Pneufit C.**

## Pneufit C Fittings

- Housing made primarily from plastic.
- Low cost.
- Modern design.
- Increasing distribution.

## Pneufit Push-In Fast Connectors

- Housing made primarily from nickel plated brass.
- Classical design.

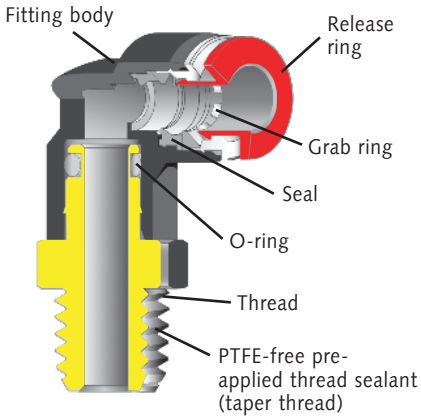


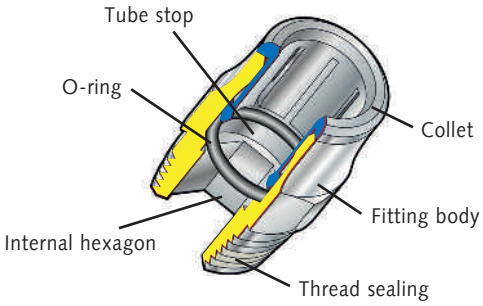


**Technical Data:**
Medium: Compressed Air.
Operating pressure: 18 bar max.
(Regulating-out banjo bolts max. 10 bar).
Vacuum: 98% max.**
Operating temperature: -20°C* to 80°C
(High temperature models on request).
*For temperatures below +2°C please take the air properties into account.

** Only for Pneufit Push-In.

**Tube sizes**
4, 6, 8, 10, 12, 14 mm outside Ø.
Note: Push-on fittings must not be used in compressed-air break systems of commercial vehicles.

**Tubes/hoses**
Polyamide tube 11 and 12, polyurethane and polyethylene hoses according to DIN 73378, DIN 74234, NFE 49-100 or BS 5409/1. For safety reasons we recommend our tubes and hoses.

**Fastening torques**
The following fastening torques apply for fittings with pre-applied thread sealant and taper threads:

| Thread | Fastening Torque (Nm) |
|---|---|
| R1/8 | 6,86 ... 8,82 |
| R1/4 | 11,76 ... 13,72 |
| R3/8 | 21,56 ... 25,32 |
| R1/2 | 27,44 ... 29,40 |

## Pneufit C dimensions

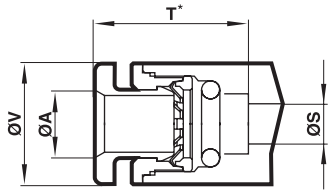


| Ø A | Ø S* | Ø T** | $V_{max}$ |
|---|---|---|---|
| 4 mm | 2,8 | 15,3 | 10,7 |
| 6 mm | 4,4 | 17,1 | 12,9 |
| 8 mm | 6,0 | 19,2 | 14,5 |

## Pneufit Push-In dimensions

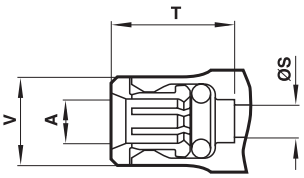


| Ø A | Ø S* | Ø T** | $V_{max}$ |
|---|---|---|---|
| 4 | 2,8 | 14,0 | 7,5 |
| 6 | 4,4 | 15,5 | 11,0 |
| 8 | 6,0 | 16,5 | 13,0 |
| 10 | 7,6 | 21,0 | 14,5 |
| 12 | 9,6 | 24,5 | 18,0 |
| 14 | 11,5 | 24,5 | 20,0 |

* Dimensions valid for all threaded connectors (exemptions possible).

** Dimensions with pushed out grab ring.

## Mounting

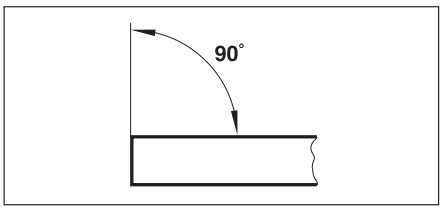


Ensure that tube is cut off square and is free from burrs.

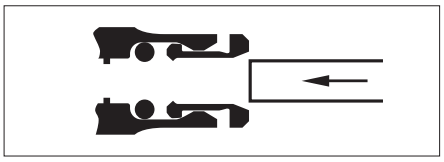

Push end of tube (outside surface must be free from damage) into the collet.

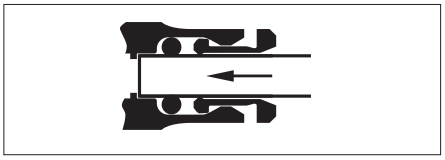

Push the tube firmly through the O-ring until it bottoms on the Stop.

## disassembly

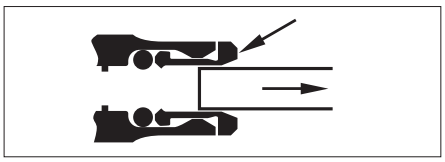

Push the collet against the fitting and withdraw the tube.

## Pneufit C Fittings

Ø A = matching tube outer diameter. B = Thread (G for parallel, R for conical).
**Drawings with complete dimensions can be found on the internet under www.maedler.de**

### Straight Unions

| Product No. | Ø A mm |
|---|---|
| 866 104 00 | 4 |
| 866 106 00 | 6 |
| 866 108 00 | 8 |

### Swivel Elbow Adaptors with Taper Thread

| Product No. | Ø A mm | B |
|---|---|---|
| 866 404 18 | 4 | R1/8 |
| 866 404 14 | 4 | R1/4 |
| 866 406 18 | 6 | R1/8 |
| 866 406 14 | 6 | R1/4 |
| 866 408 18 | 8 | R1/8 |
| 866 408 14 | 8 | R1/4 |

### Straight Adaptors with Taper Thread

| Product No. | Ø A mm | B |
|---|---|---|
| 866 204 18 | 4 | R1/8 |
| 866 204 14 | 4 | R1/4 |
| 866 206 18 | 6 | R1/8 |
| 866 206 14 | 6 | R1/4 |
| 866 208 18 | 8 | R1/8 |
| 866 208 14 | 8 | R1/4 |

### Swivel Elbow Adaptors with Cylindrical Thread

| Product No. | Ø A mm | B |
|---|---|---|
| 866 504 18 | 4 | G1/8 |
| 866 504 14 | 4 | G1/4 |
| 866 506 18 | 6 | G1/8 |
| 866 506 14 | 6 | G1/4 |
| 866 508 18 | 8 | G1/8 |
| 866 508 14 | 8 | G1/4 |

### Straight Adaptors with Cylindrical Thread

| Product No. | Ø A mm | B |
|---|---|---|
| 866 304 18 | 4 | G1/8 |
| 866 304 14 | 4 | G1/4 |
| 866 306 18 | 6 | G1/8 |
| 866 306 14 | 6 | G1/4 |
| 866 308 18 | 8 | G1/8 |
| 866 308 14 | 8 | G1/4 |

### Swivel Tee-Adaptors with Cylindrical Thread

| Product No. | Ø A mm | B |
|---|---|---|
| 866 604 18 | 4 | G1/8 |
| 866 604 14 | 4 | G1/4 |
| 866 606 18 | 6 | G1/8 |
| 866 606 14 | 6 | G1/4 |
| 866 608 18 | 8 | G1/8 |
| 866 608 14 | 8 | G1/4 |

### Union Elbows

| Product No. | Ø A mm |
|---|---|
| 866 124 00 | 4 |
| 866 126 00 | 6 |
| 866 128 00 | 8 |

## Pneufit Push-In fittings

Ø A = matching tube outer diameter. B = Thread (G for parallel, R for conical).
**Drawings with complete dimensions can be found on the internet under www.maedler.de**

### Straight Adaptors with Cylindrical Thread

| Product No. | Ø A mm | B |
|---|---|---|
| 860 104 03 | 4 | M3 |
| 860 104 05 | 4 | M5 |
| 860 104 18 | 4 | G1/8A |
| 860 104 28 | 4 | G1/4A |
| 860 106 05 | 6 | M5 |
| 860 106 18 | 6 | G1/8A |
| 860 106 28 | 6 | G1/4A |
| 860 108 18 | 8 | G1/8A |
| 860 108 28 | 8 | G1/4A |
| 860 108 38 | 8 | G3/8A |
| 860 108 48 | 8 | G1/2A |
| 860 110 18 | 10 | G1/8A |
| 860 110 28 | 10 | G1/4A |
| 860 110 38 | 10 | G3/8A |
| 860 110 48 | 10 | G1/2A |
| 860 112 28 | 12 | G1/4A |
| 860 112 38 | 12 | G3/8A |
| 860 112 48 | 12 | G1/2A |
| 860 114 38 | 14 | G3/8A |
| 860 114 48 | 14 | G1/2A |

### Straight Unions

| Product No. | Ø A mm |
|---|---|
| 860 604 00 | 4 |
| 860 606 00 | 6 |
| 860 608 00 | 8 |
| 860 610 00 | 10 |
| 860 612 00 | 12 |

### Push-In Silencers

| Product No. | Ø A mm |
|---|---|
| 861 404 00 | 4 |
| 861 406 00 | 6 |
| 861 408 00 | 8 |

### Plugs

| Product No. | Ø A mm |
|---|---|
| 861 104 00 | 4 |
| 861 106 00 | 6 |
| 861 108 00 | 8 |
| 861 110 00 | 10 |
| 861 112 00 | 12 |

### Reducing / Enlarging Connectors

| Product No. Reducing | Ø A1 mm | Ø A mm |
|---|---|---|
| 860 906 04 | 6 | 4 |
| 860 908 04 | 8 | 4 |
| 860 908 06 | 8 | 6 |
| 860 910 06 | 10 | 6 |
| 860 910 08 | 10 | 8 |
| Enlarging: | | |
| 860 904 06 | 4 | 6 |
| 860 906 08 | 6 | 8 |

## Pneufit Push-In fittings

Ø A = matching tube outer diameter. B = Thread (G for parallel, R for conical).
**Drawings with complete dimensions can be found on the internet under www.maedler.de**

### Swivel Elbow Adaptors with Cylindrical Thread

| Product No. | Ø A mm | B |
|---|---|---|
| 861 704 05 | 4 | M5 |
| 861 704 18 | 4 | G1/8A |
| 861 704 28 | 4 | G1/4A |
| 861 706 05 | 6 | M5 |
| 861 706 18 | 6 | G1/8A |
| 861 706 28 | 6 | G1/4A |
| 861 708 18 | 8 | G1/8A |
| 861 708 28 | 8 | G1/4A |
| 861 708 38 | 8 | G3/8A |
| 861 710 28 | 10 | G1/4A |
| 861 710 38 | 10 | G3/8A |
| 861 710 48 | 10 | G1/2A |
| 861 712 28 | 12 | G1/4A |
| 861 712 48 | 12 | G1/2A |

### Swivel Elbow Adaptors 45° with O ring

| Product No. | Ø A mm | B mm |
|---|---|---|
| 862 006 18 | 6 | G1/8A |
| 862 006 28 | 6 | G1/4A |
| 862 008 18 | 8 | G1/8A |
| 862 008 28 | 8 | G1/4A |

### Elbow Connectors

| Product No. | Ø A mm |
|---|---|
| 862 104 00 | 4 |
| 862 106 00 | 6 |
| 862 108 00 | 8 |
| 862 110 00 | 10 |
| 862 112 00 | 12 |

### Swivel Elbow Bulkhead Connectors

| Product No. | Ø A mm |
|---|---|
| 862 206 00 | 6 |
| 862 208 00 | 8 |
| 862 210 00 | 10 |

### Stem Elbow Connectors

| Product No. | Ø A mm | Ø A1 mm |
|---|---|---|
| 862 304 00 | 4 | 4 |
| 862 306 00 | 6 | 6 |
| 862 308 00 | 8 | 8 |

### Tee Connectors

| Product No. | Ø A mm |
|---|---|
| 862 604 00 | 4 |
| 862 606 00 | 6 |
| 862 608 00 | 8 |
| 862 610 00 | 10 |
| 862 612 00 | 12 |

### 4-Way Cross Connectors

| Product No. | Ø A mm |
|---|---|
| 862 906 00 | 6 |
| 862 908 00 | 8 |
| 862 910 00 | 10 |

### Parallel Y-Connectors

| Product No. | Ø A mm | Ø A1 mm |
|---|---|---|
| 863 004 00 | 1x4 | 2x4 |
| 863 006 00 | 1x6 | 2x6 |
| 863 008 00 | 1x8 | 2x8 |
| 863 010 00 | 1x10 | 2x10 |
| 863 006 04 | 1x6 | 2x4 |
| 863 008 06 | 1x8 | 2x6 |
| 863 010 08 | 1x10 | 2x8 |

## Elbow Banjo Assembly with Sealing Ring

**Material:** Brass, nickel plated.

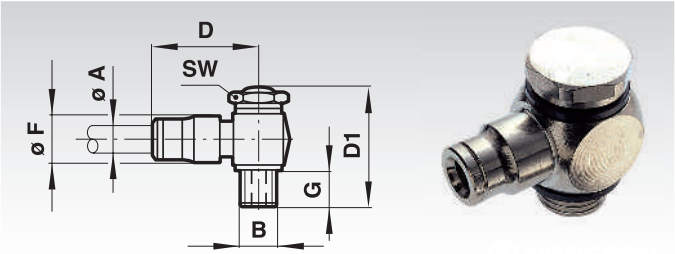


**Ordering details: e.g.: Product No. 863 504 05, Elbow Banjo Assembly with Sealing Ring, Tube Outer-Ø 4 mm, Thread M5**

| Product No. | Ø A mm | B | D mm | D1 mm | SW mm | Ø F mm | G mm | Weight g |
|---|---|---|---|---|---|---|---|---|
| **863 504 05** | 4 | M5 | 18,7 | 22 | 8 | 9,5 | 4,0 | 13 |
| **863 504 18** | 4 | G1/8A | 20,6 | 30 | 14 | 11,0 | 6,0 | 34 |
| **863 506 05** | 6 | M5 | 22,2 | 22 | 8 | 12,5 | 4,0 | 17 |
| **863 506 28** | 6 | G1/4A | 24,2 | 34 | 17 | 13,0 | 7,4 | 54 |
| **863 508 18** | 8 | G1/8A | 23,7 | 30 | 14 | 14,0 | 6,0 | 37 |
| **863 508 28** | 8 | G1/4A | 24,7 | 34 | 17 | 14,0 | 7,4 | 56 |
| **863 508 38** | 8 | G3/8A | 26,7 | 41 | 22 | 16,5 | 9,0 | 112 |
| **863 510 28** | 10 | G1/4A | 30,2 | 34 | 17 | 16,0 | 7,4 | 59 |

## Elbow Banjo Assembly, Regulating Out, with Sealing Ring

**Material:** Brass, nickel plated.

Symbol

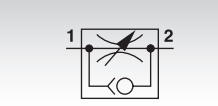


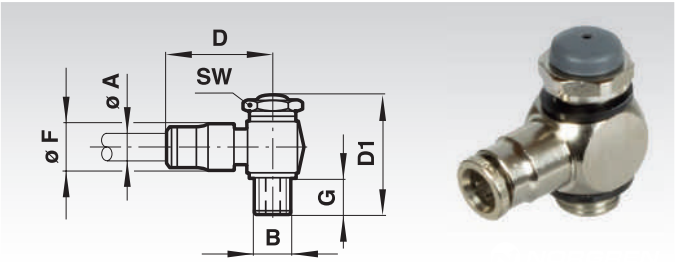


**Ordering details: e.g.: Product No. 863 604 05, Elbow Banjo Assembly, Regulating Out, with Sealing Ring, Tube Outer-Ø 4 mm, Thread M5**

| Product No. | Ø A mm | B | D mm | D1 mm | SW mm | Ø F mm | G mm | Weight g |
|---|---|---|---|---|---|---|---|---|
| **863 604 05** | 4 | M5 | 18,7 | 27,0 | 8 | 9,5 | 4,4 | 13 |
| **863 604 18** | 4 | G1/8A | 20,6 | 34,0 | 14 | 11,0 | 6,0 | 34 |
| **863 606 05** | 6 | M5 | 22,2 | 27,0 | 8 | 12,5 | 4,4 | 17 |
| **863 606 18** | 6 | G1/8A | 23,7 | 34,0 | 14 | 12,5 | 6,0 | 37 |
| **863 606 28** | 6 | G1/4A | 24,2 | 36,5 | 17 | 13,0 | 6,0 | 58 |
| **863 608 28** | 8 | G1/4A | 24,7 | 36,5 | 17 | 14,0 | 6,0 | 59 |
| **863 608 38** | 8 | G3/8A | 26,7 | 51,5 | 22 | 16,5 | 10,0 | 123 |
| **863 608 18** | 8 | G1/8A | 23,7 | 34,0 | 14 | 13,5 | 6,0 | 39 |
| **863 610 28** | 10 | G1/4A | 30,2 | 36,5 | 17 | 15,7 | 6,0 | 63 |

## Banjo Bolts with Sealing Rings

**Materials:** Brass, nickel plated.
For combination with banjo bodies.

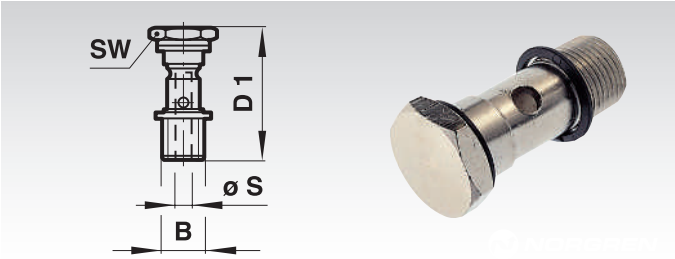


**Ordering details: e.g.: Product No. 864 700 18, Banjo Bolt with Sealing Rings, G1/8 A**

| Product No. | B | D1 mm | SW mm | Ø S mm | Weight g |
|---|---|---|---|---|---|
| **864 700 18** | G1/8A | 30 | 14 | 5,0 | 15 |
| **864 700 28** | G1/4A | 34 | 17 | 8,5 | 25 |
| **864 700 38** | G3/8A | 41 | 22 | 10,0 | 60 |

## Ball Valves Made from Brass, Exhausting, Full Bore

**Materials:** Housing: Brass, nickel plated,
Ball seat: PTFE, O-ring seals: Viton.

Operating pressure: 0 to 45 bar.
Operating temperature: -20°C to +150°C.

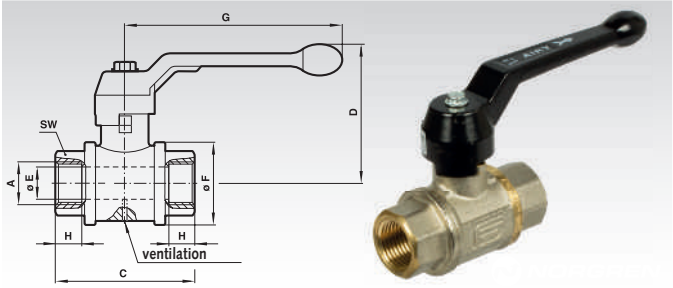


**Ordering details e.g.: Product No. 865 131 28, Ball Valves Made from Brass, Exhausting, Full Bore, Internal Thread G1/4**

| Product No. | A | C mm | D mm | Ø E mm | Ø F mm | G mm | H mm | SW mm | Weigth g |
|---|---|---|---|---|---|---|---|---|---|
| **865 131 28** | G1/4 | 57 | 61 | 8 | 29 | 100 | 6,5 | 22 | 259 |
| **865 131 38** | G3/8 | 54 | 61 | 10 | 29 | 100 | 8,5 | 22 | 245 |
| **865 131 48** | G1/2 | 69 | 64 | 15 | 35 | 100 | 9,5 | 27 | 365 |
| **865 131 68** | G3/4 | 77 | 76 | 20 | 45 | 120 | 10,5 | 33 | 619 |
| **865 131 88** | G1 | 89 | 80 | 25 | 54 | 120 | 11,5 | 40 | 883 |

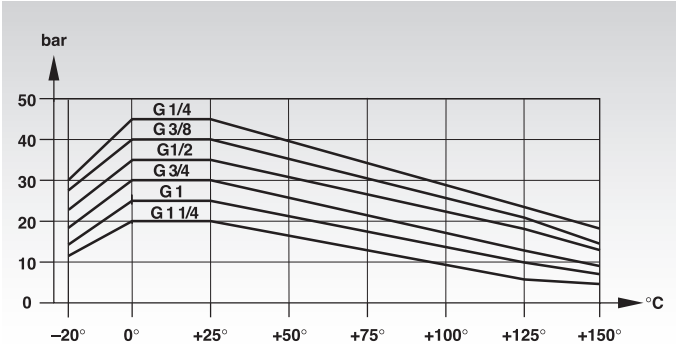


## Ball Valves Made from Brass, Full Bore

**Materials:** Housing: Brass, nickel plated.
Seat: PTFE, O-ring seals: Viton.

Operating pressure: 0 to 45 bar.
Operating temperature: -20°C to +150°C.

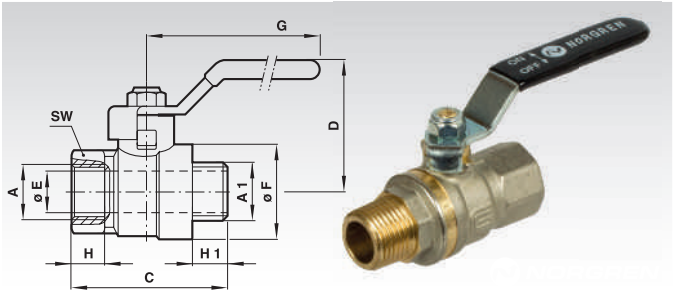


**Ordering details e.g.: Product No. 865 022 28, Ball Valves made from Brass, Standard, Full Bore, External thread G1/4**

| Product No. | A | A1 | C mm | D mm | Ø E mm | Ø F mm | G mm | SW mm | H mm | H1 mm | Weigth g |
|---|---|---|---|---|---|---|---|---|---|---|---|
| **865 022 28** | G1/4 | G1/4A | 50 | 36 | 8 | 23 | 85 | 18 | 6,5 | 6,5 | 128 |
| **865 022 38** | G3/8 | G3/8A | 54 | 36 | 10 | 24 | 85 | 21 | 8,5 | 8,5 | 154 |
| **865 022 48** | G1/2 | G1/2A | 65 | 40 | 15 | 30 | 85 | 25 | 9,5 | 9,5 | 212 |
| **865 022 68** | G3/4 | G3/4A | 75 | 47 | 20 | 38 | 105 | 31 | 10,5 | 10,5 | 365 |
| **865 022 88** | G1 | G1A | 86 | 51 | 25 | 46 | 105 | 38 | 11,5 | 11,5 | 545 |

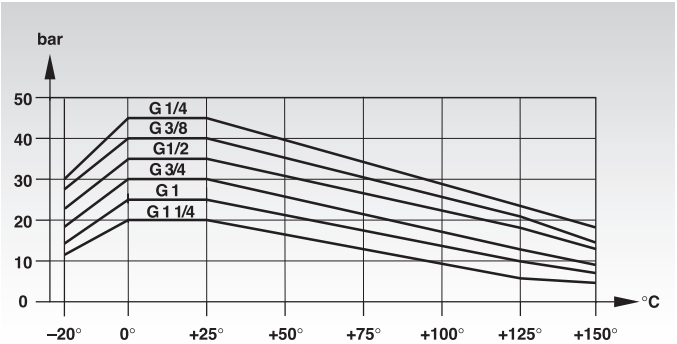

## Exhaust Filters

**Material:** Housing: Aluminium. Filter element: Sintered metal.
Operating pressure: max. 10 bar.

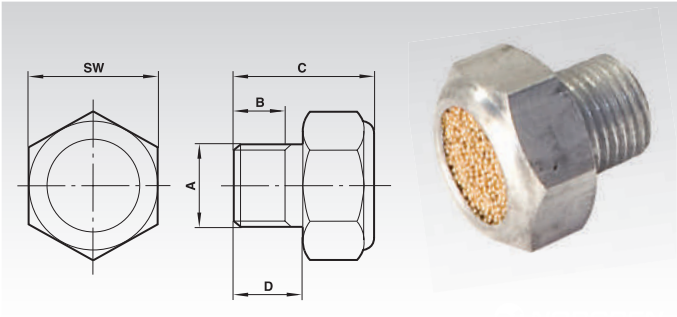


**Ordering details e.g.: Product No. 865 315 11, Exhaust Filter, Thread Outer Ø G1/8A**

| Product No. | A | B mm | C mm | D mm | SW mm | Flow at 6 bar Operating Pressure m³/h | Weight g |
|---|---|---|---|---|---|---|---|
| **865 315 11** | G1/8A | 6 | 16 | 8 | 15 | 11,3 | 6 |
| **865 315 12** | G1/4A | 8 | 22 | 10 | 23 | 27,7 | 18 |
| **865 315 14** | G1/2A | 10,5 | 25 | 13 | 30 | 37,8 | 30 |
| **865 315 16** | G3/4A | 14 | 31 | 16 | 42 | 98,3 | 50 |
| **865 315 18** | G 1 A | 15 | 35 | 19 | 47 | 138,6 | 91 |

## Silencers

**Material:** Filter element: Sintered metal. Housing: Brass.
Operating pressure: max. 10 bar.

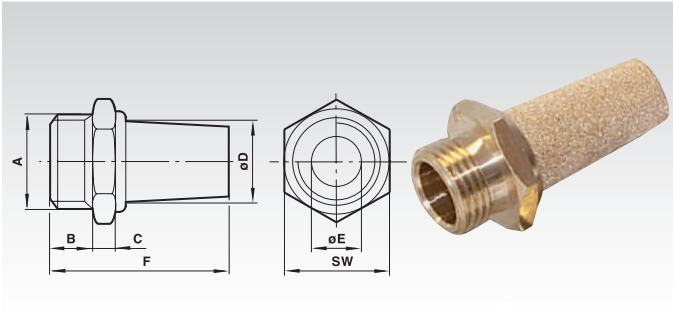


**Ordering details e.g.: Product No. 866 005 00, Silencer, Thread M5**

| Product No. | A | B mm | C mm | Ø D mm | Ø E mm | F mm | SW mm | Venting Noise dB(A), Measuring Distance 1m at 0,7 bar | at 6 bar | Weight g |
|---|---|---|---|---|---|---|---|---|---|---|
| **866 005 00** | M5 | 5 | 5 | 5 | 2,5 | 2,0 | 7 | 56 | 70 | 4 |
| **866 018 00** | G 1/8 A | 6 | 5 | 9,5 | 6 | 24 | 13 | 66 | 75 | 10 |
| **866 028 00** | G 1/4A | 8 | 5 | 12 | 8,5 | 33 | 17 | 68 | 78 | 20 |
| **866 038 00** | G 3/8 A | 10 | 5 | 17 | 12 | 44 | 22 | 75 | 84 | 39 |
| **866 048 00** | G 1/2 A | 12 | 5,5 | 20 | 14,8 | 56 | 27 | 75 | 88 | 68 |
| **866 068 00** | G 3/4 A | 14 | 6 | 26 | 19 | 80 | 32 | 87 | 96 | 130 |
| **866 088 00** | G 1 A | 16 | 6 | 31 | 25 | 82 | 41 | 93 | 100 | 200 |

## Block Form Flow Regulators, Uni Directional

**Materials:**
M5: Housing plastic. Threaded insert: Brass,
Seals: Nitrile rubber. Valve needle: Brass, nickel plated.

G1/8, G1/4: Housing: Zinc alloy. Seals: Nitrile rubber,
Valve needle/inner part: Brass. Outer parts: Aluminium alloy.
G3/8, G1/2: Housing: Aluminium alloy. Seals: Nitrile rubber.
Valve needle/inner part: Brass. Outer parts: Aluminium alloy.
Medium: Compressed air, filtered, lubricated or non-lubricated.
Inert gases.
Operating pressure: 1 to 10 bar (2 to 10 bar for M5).
Operating temperature: max. +80°C (60°C max. for M5).
Mode of operation: Flow regulator.

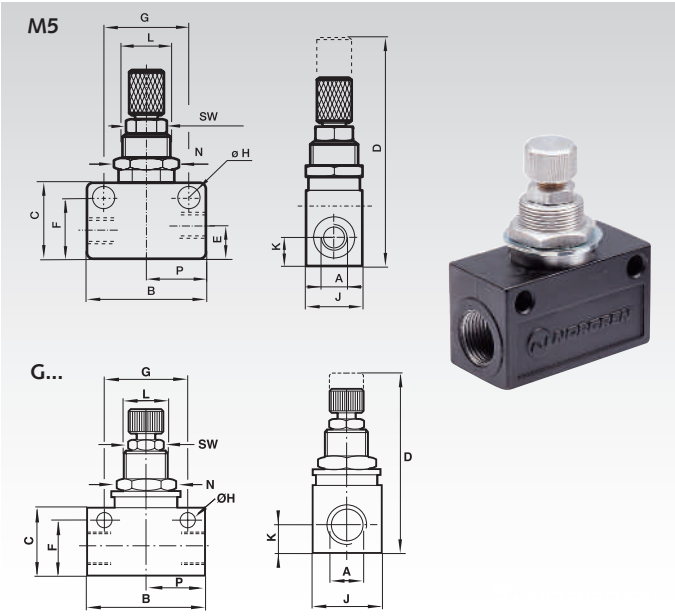


**Ordering details e.g.: Product No. 865 405 00, Block Form Flow Regulators, Uni Directional, Thread M5**

Symbol

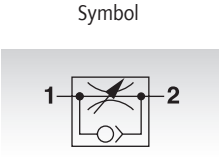


| Product No. | A | B | C | D | E | F | G | H | J | K | L | SW | N | P | Panel Bore | Max. Panel Thickness | Weight |
|---|---|---|---|---|---|---|---|---|---|---|---|---|---|---|---|---|---|
| | | mm | mm | mm | mm | mm | mm | mm | mm | mm | mm | mm | mm | mm | mm | mm | g |
| **865 405 00** | M 5 | 25 | 15 | 45 | 6,5 | 12 | 18 | 4,5 | 12 | 5,5 | M10x0,75 | 8 | 12 | 12,5 | 10,5 | 4 | 12 |
| **865 418 00** | G 1/8 | 34 | 20 | 51 | - | 16,5 | 24 | 4,5 | 16 | 8 | M12x1 | 10 | 14 | 17 | 12,5 | 4 | 65 |
| **865 428 00** | G 1/4 | 45 | 25,5 | 61,5 | - | 21 | 32 | 4,5 | 19 | 9,5 | M14x1 | 10 | 17 | 22,5 | 14,5 | 4 | 115 |
| **865 438 00** | G 3/8 | 58 | 32,5 | 78,5 | - | 27 | 43 | 6,5 | 28 | 13 | M20x1 | 14 | 24 | 29 | 20,5 | 4 | 153 |
| **865 448 00** | G 1/2 | 65 | 36 | 82 | - | 30,5 | 50 | 6,5 | 30 | 15 | M20x1 | 14 | 24 | 32,5 | 20,5 | 4 | 186 |

### Flow dates

| Max. Flow in regulating direction at 6 bar l/min | Max. Flow against regulating direction at 6 bar l/min | Kv-Value in regulating direction 1 to 2 | Flow at 6 bar in regulating direction 1 to 2 m³/h | Kv-Value against regulating direction 2 to 1 | Flow at 6 bar against regulating direction 2 to 1 m³/h |
|---|---|---|---|---|---|
| 200 | 210 | 0,13 | 12,1 | 0,14 | 12,6 |
| 550 | 550 | 0,37 | 33 | 0,37 | 33 |
| 1800 | 2460 | 1,2 | 108,1 | 1,64 | 148 |
| 2770 | 3000 | 1,84 | 166,05 | 1,99 | 180 |

## Quick Exhaust Valves

**Materials:** Housing and cover: Aluminium or zinc alloy.
Seals: Nitrile rubber.

Medium: Compressed air, filtered, lubricated or non-lubricated.
Mode of operation: Poppet valve.
Mounting: In-line.
Operating pressure: 0.5 to 10 bar.
Operating temperature: max. +80°C.

- Enables air to be dumped quickly from air reservoirs and cylinders.
- Allows higher cylinder speeds to be achieved.

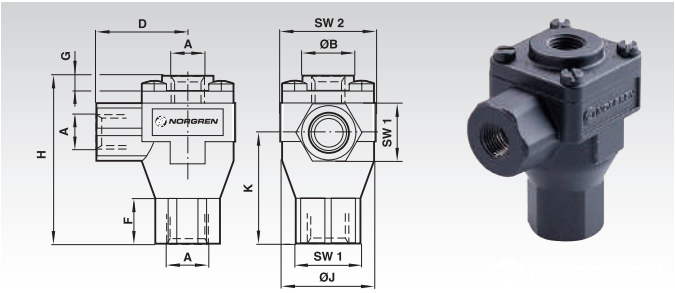


**Ordering details e.g.: Product No. 865 518 00, Quick Exhaust Valves, Thread G1/8**

Symbol

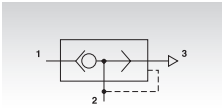


| Product No. | A | Ø B | D | F | G | H | Ø J | K | SW 1 | SW 2 | Weight |
|---|---|---|---|---|---|---|---|---|---|---|---|
| | | mm | mm | mm | mm | mm | mm | mm | mm | mm | g |
| **865 518 00** | G 1/8 | 19 | 28 | 15,3 | 3,5 | 53 | 29 | 35,5 | 19 | 30 | 150 |
| **865 528 00** | G 1/4 | 19 | 28 | 15,3 | 3,5 | 53 | 29 | 35,5 | 19 | 30 | 130 |
| **865 538 00** | G 3/8 | 30 | 40 | 15,5 | 4 | 73,5 | 46 | 48 | 30 | 46 | 210 |
| **865 548 00** | G 1/2 | 30 | 40 | 15,5 | 4 | 73,5 | 46 | 48 | 30 | 46 | 190 |

| Product No. | Ports Primary | Ports Secondary | Port Size | Kv-Value 1 to 2 | Kv-Value 2 to 3 | Flow at 6 bar Operating pressure (m³/h) 1 to 2 | Flow at 6 bar Operating pressure (m³/h) 2 to 3 |
|---|---|---|---|---|---|---|---|
| **865 518 00** | G 1/8 | G 1/8 | G 1/8 | 1,06 | 1,23 | 95,80 | 110,9 |
| **865 528 00** | G 1/4 | G 1/4 | G 1/4 | 2,23 | 2,46 | 201,6 | 221,8 |
| **865 538 00** | G 3/8 | G 3/8 | G 3/8 | 4,47 | 5,02 | 403,2 | 453,6 |
| **865 548 00** | G 1/2 | G 1/2 | G 1/2 | 6,14 | 6,84 | 554,4 | 617,4 |

## Non-Return Valves

**Material:** Housing: Anodised aluminium.
Seals Nitrile rubber.

Medium: Compressed air, filtered, lubricated or non-lubricated.
Mode of operation: Poppet valve.
Operating pressure: -0.9 to 16 bar.
Operating temperature: 80°C.

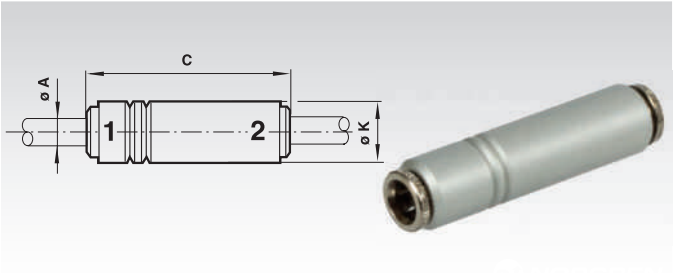


**Ordering details e.g.: Product No. 865 800 04, Non-Return Valves, Tube Outer-Ø 4 mm**

Symbol

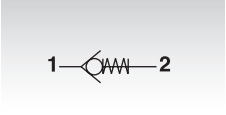


| Product No. | Ø A mm | C mm | Ø K mm | Flow Operating Pressure 6 bar | Weight g |
|---|---|---|---|---|---|
| **865 800 04** | 4 | 49 | 11 | 0,11 (159.6 l/min) | 10 |
| **865 800 06** | 6 | 56,5 | 13 | 0,44 (659,4 l/min) | 16 |
| **865 800 08** | 8 | 61 | 15 | 0,89 (1344 l/min) | 22 |
| **865 800 10** | 10 | 77,5 | 20 | 1,26 (1890 l/min) | 48 |
| **865 800 12** | 12 | 88,5 | 22 | 1,87 (2814 l/min) | 64 |

## Plug with Sealing Ring

**Material:** Brass, nickel plated.

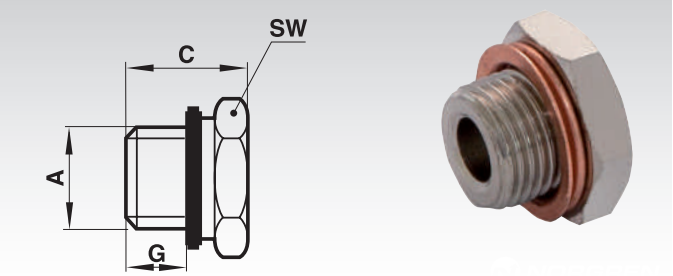


**Ordering details e.g.: Product No. 865 900 05, Plug with Sealing Ring, Thread M5**

| Product No. | A | C mm | G mm | SW mm | Weight g |
|---|---|---|---|---|---|
| **865 900 05** | M5 | 8 | 4,5 | 8 | 2 |
| **865 900 28** | G1/4 A | 13 | 9 | 17 | 13 |
| **865 900 38** | G 3/8 A | 13,5 | 9,5 | 19 | 20 |
| **865 900 48** | G1/2 A | 14,5 | 10 | 24 | 27 |
| **865 900 68** | G3/4 A | 16 | 11 | 30 | 49 |
| **865 900 88** | G 1 A | 17 | 12 | 40 | 190 |

## Tube Cutter

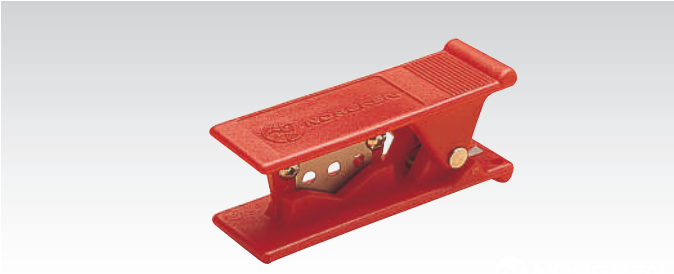

**Ordering details e.g.: Product No. 869 999 00, Tube Cutter**

| Product No. | Weight g |
|---|---|
| **869 999 99** | 25 |

## Disconnection Tool

**Ordering details e.g.: Product No. 869 999 90, Disconnection Tool**

| Product No. | Weight g |
|---|---|
| **869 999 90** | 45 |

## Polyamide Tubes PA

Dimensions and tolerances to DIN 73378.

**Ordering details e.g.: Product No. 869 804 01 Polyamide Tube Outer Ø 4 mm, Inner-Ø 2.5 mm, Length (Max. Length 100 m)**

| Product No. Natural | Product No. Blue | Product No. Black | Ø Outer mm | Ø Inner mm | Weight per m g |
|---|---|---|---|---|---|
| 869 804 01 | 869 804 02 | 869 804 03 | 4 | 2,5 | 10 |
| 869 806 01 | 869 806 02 | 869 806 03 | 6 | 4 | 20 |
| 869 808 01 | 869 808 02 | 869 808 03 | 8 | 6 | 30 |
| 869 810 01 | 869 810 02 | 869 810 03 | 10 | 7,5 | 50 |
| 869 812 01 | 869 812 02 | 869 812 03 | 12 | 9 | 70 |
| 869 814 01 | 869 814 02 | 869 814 03 | 14 | 11 | 90 |

## Polyurethane Hoses PU

Dimensions and tolerances to DIN 73378.

**Ordering details e.g.: Product No. 869 904 01, Polyurethane Hose, Outer Ø 4 mm, Inner Ø 2.5 mm, Length (Max. Length 100 m)**

| Product No. Natural | Product No. Blue | Product No. Black | Ø Outer mm | Ø Inner mm | Weight per m g |
|---|---|---|---|---|---|
| 869 904 01 | 869 904 02 | 869 904 03 | 4 | 2,5 | 13 |
| 869 906 01 | 869 906 02 | 869 906 03 | 6 | 4 | 25 |
| 869 908 01 | 869 908 02 | 869 908 03 | 8 | 5,5 | 40 |
| 869 910 01 | 869 910 02 | 869 910 03 | 10 | 7 | 50 |
| 869 912 01 | 869 912 02 | 869 912 03 | 12 | 8 | 100 |

## Note

**Max. Operating Pressure**

| Tube Outer-Ø | | 4 mm | 6 mm | 8 mm | 10 mm | 12 mm | 14 mm |
|---|---|---|---|---|---|---|---|
| Max. Pressure* | Polyamide Tube | 28 bar | 25 bar | 19 bar | 24 bar | 18 bar | 15 bar |
| at -40 °C to +20 °C | Polyurethane Hose | 10 bar | 9 bar | 9 bar | 9 bar | 9 bar | - |
| Min. Bend Radius | Polyamide Tube | 25 mm | 30 mm | 50 mm | 60 mm | 75 mm | 80 mm |
| Min. Bend Radius | Polyurethane Hose | 6 mm | 9 mm | 16 mm | 17 mm | 25 mm | - |

* Permissible Operating Pressure = Max. Operating Pressure x Factor.

**Conversion factor: Temp. / Operating Pressure**

| Operating Pressure | Factor |
|---|---|
| + 30 °C | 0.83 |
| + 40 °C | 0.72 |
| + 50 °C | 0.64 |
| + 60 °C | 0.57 |
| + 70 °C | 0.47 |

Maximum permanent operating temperature:
PA +80°C. PU +60°C.

## Blow Gun with Metal Nozzle

**Material:** Composite material. Port thread with brass insert, Nozzle: Steel thread.

**Applications:**
- Blow off and remove chippings, swarf and dust.
- Cleaning of machines, work benches, work places, and areas which are difficult to reach.
- Drying of work pieces.
- Can be used with air and water.

Blow guns are made from a high-tech composite material and thus very rugged, scratch-resistant, insulating and slip proof. Perfect mounting safety due to brass insert (G1/4 inch internal thread). The blow guns feature good ergonomics. This ergonomic shape means no swarf or dust can gather on the gun.

Steel nozzle: Ø 3 x 6 mm.
Length of nozzle: 110 mm.
Flow at 6 bar: 23 N.m³/h.

Temperature: -15 to +70°C.
G 1/4 internal thread.
Max. operating pressure: 10 bar.

| Product No. | A mm | Weight g |
|---|---|---|
| 870 001 00 | 235 | 138 |

**Ordering details: e.g.: Prod.-No. 870 001 00, Blow Gun with Metal Nozzle**

**Hoses and tail pieces see next page.**

## Blow Gun with Straight, Scratch-Resistant Nozzle

**Material:** Composite material. Port thread with brass insert.
Nozzle: Composite material to prevent surface from getting damaged.

**Applications:**
- Blow off and remove chippings, swarf and dust.
- Cleaning of machines, work benches, work places, and areas which are difficult to reach.
- Drying of work pieces.
- Can be used with air and water.

Blow guns are made from a high-tech composite material and thus very rugged, scratch-resistant, insulating and slip proof. Perfect mounting safety due to brass insert (G1/4 inch internal thread). The blow guns feature good ergonomics. This ergonomic shape means no swarf or dust can gather on the gun.

Nozzle : Ø 2 x 12 mm.
Length of nozzle: 59 mm.
Flow at 6 bar: 15 N.m³/h.

Temperature: -15 to +70°C.
G 1/4 internal thread.
Max. operating pressure: 10 bar.

| Product No. | A mm | Weight g |
|---|---|---|
| 870 002 00 | 187 | 119 |

**Ordering details: e.g.: Prod.-No. 870 002 00, Blow Gun with Straight, Scratch-Proof Nozzle**

**Hoses and tail pieces see next page.**

## Blow Gun with Silent Nozzle

**Material:** Composite material. Port thread with brass insert.
Nozzle: Composite material to lower noise level.

**Applications:**
- Blow off and remove chippings, swarf and dust.
- Cleaning of machines, work benches, work places, and areas which are difficult to reach.
- Drying of work pieces.
- Can be used with air and water.

Blow guns are made from a high-tech composite material and thus very rugged, scratch-resistant, insulating and slip proof. Perfect mounting safety due to brass insert (G1/4 inch internal thread). The blow guns feature good ergonomics. This ergonomic shape means no swarf or dust can gather on the gun.

Nozzle to lower noise level.

Length of nozzle: 56 mm.
Complies with americ. OSHA standard.

Temperature: -15 to +70°C
G 1/4 internal thread.
Max. operating pressure: 10 bar.

| Product No. | A mm | Weight g |
|---|---|---|
| 870 003 00 | 185 | 119 |

**Ordering details: e.g.: Prod.-No. 870 003 00, Blow Gun with Silent Nozzle**

**Hoses and tail pieces see next page.**

## Hose Coils with Swiveling Hose Tail

**Material:** Polyurethane, flexible and extremely rugged.
Fitting made from nickel-plated brass.

The hose retracts to its original shape: the coils will not loose their original shape even under most adverse operating conditions.

**Data of fixed fitting on the supply side:**
- PTFE pre-coated thread.
- PVC coating to protect hose.

**Data of the swivel connection on the side of the compressed-air tool:**
- Swivelling joint with ball bearing.
- Easy swivelling, even under pressure, no overstressing of hose coil.

Max. temperature: 70°C. Operating pressure at 20°C: Ø 5 x 8: 9 bar.
Ø 6.5 x 10: 9 bar.
Ø 8 x 12: 8 bar.

Pressure: 10 bar. Flexibility: bendable. Colour: blue.

**Ordering details: e.g.: Prod.-No. 870 105 02, Hose Coil 5x8 mm**

| Product No. | Ø I/O mm | Fixed Connection Inch | Swivel Connection Inch | Max. Length m | Min. Length m | Ø Coil mm | Weight g |
|---|---|---|---|---|---|---|---|
| **870 105 02** | 5 x 8 | G 1/4 | G 1/4 | 2 | 0,18 | 42 | 189 |
| **870 105 04** | 5 x 8 | G 1/4 | G 1/4 | 4 | 0,4 | 42 | 290 |
| **870 106 04** | 6,5 x 10 | G 1/4 | G 1/4 | 4 | 0,4 | 52 | 413 |
| **870 106 06** | 6,5 x 10 | G 1/4 | G 1/4 | 6 | 0,63 | 52 | 577 |
| **870 106 08** | 6,5 x 10 | G 1/4 | G 1/4 | 8 | 0,8 | 52 | 711 |
| **870 106 10** | 6,5 x 10 | G 1/4 | G 1/4 | 10 | 0,95 | 52 | 877 |
| **870 108 08** | 8 x 12 | G 3/8 | G 3/8 | 8 | 0,72 | 65 | 947 |

## Flexible Hoses

**Material:** PVC, transparent, blue, nylon reinforced.
Used for compressed air, oil and water.

**Ordering details: e.g.: Prod.-No. 870 206 12, 6x12 mm**

| Product No. | Diameter Inner/Outer mm | Operating Pressure at 20°C bar | Max. Pressure at 20°C bar | Max. Temperature °C | Weight g per Meter |
|---|---|---|---|---|---|
| **870 206 12** | 6 x 12 | 15 | 50 | 60 | 97 |
| **870 208 14** | 8 x 14 | 15 | 50 | 60 | 124 |
| **870 209 15** | 9 x 15 | 15 | 50 | 60 | 125 |
| **870 210 16** | 10 x 16 | 15 | 50 | 60 | 147 |
| **870 213 20** | 13 x 20 | 15 | 50 | 60 | 214 |

## Hose Tail Pieces with Taper External Thread

**Material:** Brass, nickel plated.

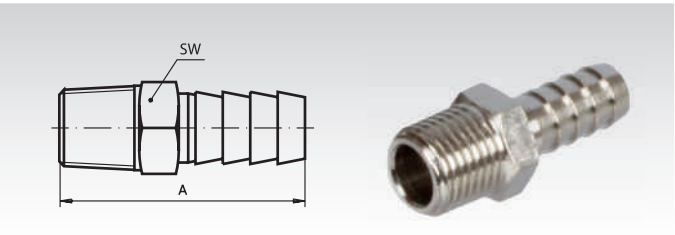


**Ordering details: e.g.: Prod.-No. 870 306 14, 1/4", for Hose 6 mm**

| Product No. | Thread Inch | A mm | Hose-Ø mm | SW mm | Weight g |
|---|---|---|---|---|---|
| **870 306 14** | R 1/4" | 36 | 6 | 14 | 15 |
| **870 309 14** | R 1/4" | 36 | 9 | 14 | 15 |
| **870 310 14** | R 1/4" | 36 | 10 | 14 | 19 |

## Standard and Safety Quick-Release Couplings

**Standard and safety quick-release couplings ISO 4414, DIN-Standard EN 983. Adaptor profile 7.2 German standard.**

**The safety locking system of the safety coupling stops the dangerous „whip effect".**

The novel locking system of the coupling offers optimum tightness at low coupling forces.
Innovative, patented technology.
Perfect performance and safety.

Standard Quick Coupling

Safety Quick Coupling: one pull and the compressed air is dumped.
One push and the adaptor is safely disconnected

## Standard and Safety Quick-Release Couplings with Internal Thread

**Material:** Composite material.

Air-flow-Ø: 7.2/7.4 mm.
Air flow: 1470 l/min ΔP: 0.6 bar.
1920 l/min ΔP: 1 bar.
Adaptor profile: NW 7.2 and NW 7.4.
Operating pressure: 2 to 12 bar.
Max. operating pressure: 16 bar.
Temperature range: -15°C to +70°C.

**Ordering details: e.g.: Prod.-No., Type, Size**

| Product No. Safety Quick Coupling | Product No. Standard Quick Coupling | Connection | $L_1$ mm | Ø mm | $L_2$ mm | Weight Safety Quick Coupling in g | Weight Standard Quick Coupling in g |
|---|---|---|---|---|---|---|---|
| 870 401 14 | 870 411 14 | G 1/4 | 49 | 32 | 60 | 73 | 72 |
| 870 401 38 | 870 411 38 | G 3/8 | 49 | 32 | 60 | 70 | 65 |
| 870 401 12 | 870 411 12 | G 1/2 | 49 | 32 | 70 | 88 | 87 |

## Standard and Safety Quick-Release Couplings with Parallel External thread (with PTFE Coating)

**Material:** Composite material.

Air-flow-Ø: 7.2/7.4 mm.
Air flow: 1470 l/min ΔP: 0.6 bar.
1920 l/min ΔP: 1 bar.
Adaptor profile: NW 7.2 and NW 7.4.
Operating pressure: 2 to 12 bar.
Max. operating pressure: 16 bar.
Temperature range: -15°C to +70°C.

**Ordering details: e.g.: Prod.-No., Type, Size**

| Product No. Safety Quick Coupling | Product No. Standard Quick Coupling | Connection | $L_1$ mm | Ø mm | $L_2$ mm | Weight Safety Quick Coupling in g | Weight Standard Quick Coupling in g |
|---|---|---|---|---|---|---|---|
| 870 403 14 | 870 413 14 | G 1/4 | 49 | 32 | 71 | 89 | 87 |
| 870 403 38 | 870 413 38 | G 3/8 | 49 | 32 | 72 | 87 | 86 |
| 870 403 12 | 870 413 12 | G 1/2 | 49 | 32 | 75 | 114 | 114 |

## Standard and Safety Quick-Release Couplings with Hose Connection

**Material:** Composite material.

Air-flow-Ø: 7.2/7.4 mm.
Air flow: 1470 l/min ΔP: 0.6 bar.
1920 l/min ΔP: 1 bar.
Adaptor profile: NW 7.2 and NW 7.4.
Operating pressure: 2 to 12 bar.
Max. operating pressure: 16 bar.
Temperature range: -15°C to +70°C.

| Product No. Safety Quick Coupling | Product No. Standard Quick Coupling | Connection mm | $L_1$ mm | Ø mm | $L_2$ mm | Weight fv Quick Coupling in g | Weight Standard Quick Coupling in g |
|---|---|---|---|---|---|---|---|
| 870 406 01 | 870 416 01 | 6 - 7 | 49 | 32 | 78 | 80 | 78 |
| 870 406 03 | 870 416 03 | 8 | 49 | 32 | 78 | 81 | 80 |
| 870 406 05 | 870 416 05 | 9 | 49 | 32 | 78 | 80 | 79 |
| 870 406 07 | 870 416 07 | 9 - 10 | 49 | 32 | 78 | 83 | 82 |
| 870 406 09 | 870 416 09 | 13 | 49 | 32 | 83 | 92 | 92 |

## Adaptors with Internal Thread for Standard and Safety Quick-Release Couplings

**Material:** Carbonated steel, with corrosion- proof treatment.

Internal diameter: 7.2 mm/7.4 mm.
Operating pressure: 2 - 12 bar.
Max. operating pressure: 16 bar.
Precision: constant dimensions.
Hardness: wear resitant.

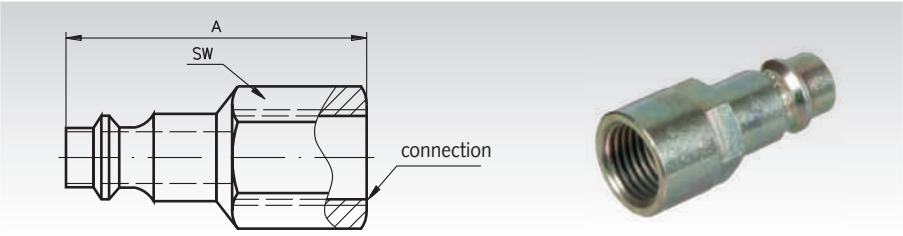


**Ordering details: e.g.: Prod.-No., Type, Size**

| Product No. | Connection | A mm | SW mm | Weight g |
|---|---|---|---|---|
| **870 330 14** | G 1/4 | 40 | 20 | 21 |
| **870 330 38** | G 3/8 | 42 | 21 | 39 |
| **870 330 12** | G 1/2 | 46 | 25 | 56 |

## Adaptors with External Thread for Standard and Safety Quick-Release Couplings

**Material:** Carbonated steel, with corrosion- proof treatment.

Internal diameter: 7.2 mm/7.4 mm.
Operating pressure: 2 - 12 bar.
Max. operating pressure: 16 bar.
Precision: constant dimensions.
Hardness: wear resitant.

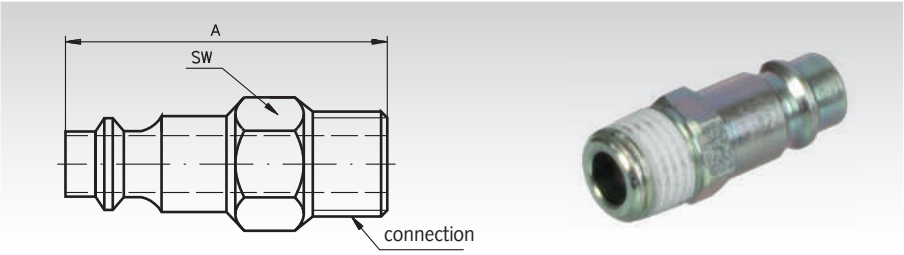


**Ordering details: e.g.: Prod.-No., Type, Size**

| Product No. | Connection | A mm | SW mm | Weight g |
|---|---|---|---|---|
| **870 332 14** | G 1/4 | 35 | 15 | 19 |
| **870 332 38** | G 3/8 | 41 | 17 | 31 |
| **870 332 12** | G 1/2 | 49 | 22 | 62 |

## Adaptors with Hose Connector for Standard and Safety Quick-Release Couplings

**Material:** Carbonated steel, with corrosion- proof treatment.

Internal diameter: 7.2 mm/7.4 mm.
Operating pressure: 2 - 12 bar.
Max. operating pressure: 16 bar.
Precision: constant dimensions.
Hardness: wear resitant.

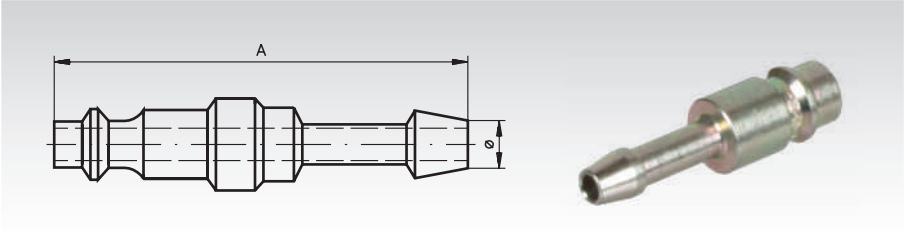


**Ordering details: e.g.: Prod.-No., Type, Size**

| Product No. | Connection Ø mm | A mm | Weight g |
|---|---|---|---|
| **870 346 00** | 6 | 45 | 14 |
| **870 348 00** | 8 | 46 | 17 |
| **870 349 00** | 9 | 54 | 25 |
| **870 350 00** | 10 | 46 | 19 |
| **870 353 00** | 13 | 52 | 26 |

# www.maedler.de

## ...the entire MÄDLER® range with CAD files on the Internet

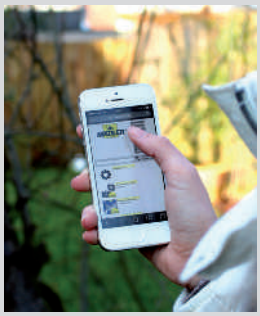

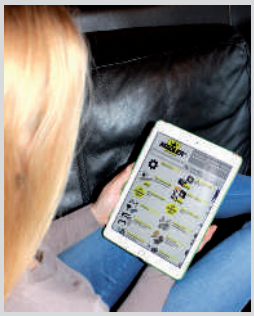

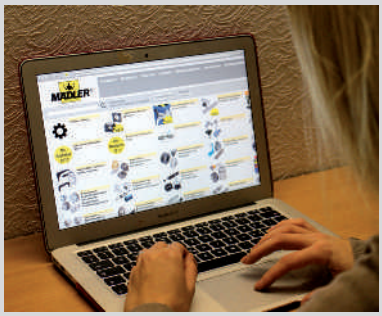

We present the entire ***MÄDLER***® range with CAD files and ***MÄDLER***® info, continuously updated, on the internet.
Fast access to the data, fast ordering by internet.
Orders by internet, phone, fax or e-mail:
We guarantee delivery at short notice.

Dimensions and other information in this catalogue display the current state of technology. We reserve the right for changes.
This catalogue was created with due diligence, but errors might still occur. We refuse to accept any claims in this respect. We reserve the right to alter dimensions, and to change or remove single products and product groups without prior notice. Our general conditions of sales, delivery and payment can be found on the last page of this catalogue.

## ...we keep things moving

## Gearboxes and Geared Motors Overview

| Type | i | Md in Nm |
|---|---|---|
| Helical Gearboxes Type BT/I with Two Shaft Ends, 2-stage | 2,11 - 53,79 | 24,2 - 700 |
| Page 657 | | |
| Shaft Mounted Flat Gearboxes Type BOC/I, 2-Stage | 3,34 - 65,70 | 105 - 900 |
| Page 662 | | |
| Bevel Gearboxes Type HUG | 1 : 1 | 0,11 - 0,68 |
| Page 666 | | |
| Angular Drives with Acetal Bevel Gears on Metal Plate | 1 : 1 | 0,83 - 4,40 |
| Page 666 | | |
| Bevel Gearboxes Type KEK | 1 : 1 | 0,05 - 10 |
| Page 667 | | |
| Bevel Gearboxes Type DZA and DZR (stainless) Versions A und B | 1 : 1 - 2 : 1 | 2,0 - 89 |
| Page 668 | | |
| Bevel Gearboxes Type DZA and DZR (stainless) Versions A und B | 1 : 1 - 2 : 1 | 1,1 - 42 |
| Page 670 | | |
| Bevel Gearboxes Type DZA model H | 1 : 1 - 2 : 1 - 3 : 1 | 7 - 38 |
| Page 672 | | |
| Bevel Gearboxes Type KU/I Models K and L | 1 : 1 - 6 : 1 | 15 - 600 |
| Page 673 | | |

| Type | i | Md in Nm |
|---|---|---|
| Bevel Gearboxes Type KU/I Model H | 1 : 1 - 6 : 1 | 15 - 600 |
| Page 678 | | |
| Worm Gear Units Type G/II | 5 : 1 - 75 : 1 | 7 - 14 |
| Page 680 | | |
| Worm Gear Units KES | 13 : 1 - 65 : 1 | 4,5 - 18 |
| Page 681 | | |
| Worm Gear Units Type H/I | 7,5 : 1 - 100 : 1 | 12 - 187 |
| Page 682 | | |
| Worm Gear Units Type ZM/I, Version A and Version HL | 4,83 : 1 - 82 : 1 | 37 - 840 |
| Page 685 | | |
| Ready to install Linear Actuators, 230 V AC/50Hz and 24 V DC | Lifting Power 133 N to 6000 N | |
| Page 758 | | |
| Linear drives 24 V DC | Lifting Power 400 N to 1200 N | |
| Page 760 | | |
| Worm Gear Screw Jacks Type NP/I Version A, B, C | Lifting Power 2500 N to 50000 N | |
| Page 761 | | |
| Connecting Shafts universal use | | 15 - 530 |
| Page 766 | | |

| Type | P | $n_2$ $min^{-1}$ | $Md_2$ Nm |
|---|---|---|---|
| Standard Three-Phase Motors Type SM/I, 230/400V, 50 Hz | 0,18 kw - 7,5 kW | 750 - 3000 | 2 - 2,8 |
| Page 692 | | | |
| Control Units for DC Drives | | | |
| Page 696 | | | |
| Frequency converters | - 2,2 kW | | |
| Page 698 | | | |
| Small Geared Motors Type CRO, 230 V, 50 Hz | 3,7 W | 0,25 - 60 | 0,1 - 2,0 |
| Page 700 | | | |
| Small Geared Motors Type GE/I 12 V DC 24 V DC 230 V AC | 6,7 W | 0,26 - 173,3 | 0,28 - 2,4 |
| Page 702 | | | |
| Small Helical Geared Motors Type SF 24 V DC | 0,31 W - 5,55 W | 2 - 610 | 0,1 - 2 |
| Page 704 | | | |
| Small Worm Geared Motors Type SFS 12 - 24 V DC | 2,1 W - 56 W | 7,4 - 543 | 1 - 5 |
| Page 705 | | | |
| Small Worm Geared Motors Type SG and SGH 12 - 24 V DC | 28 W - 54 W | 44 - 1000 | 0,4 - 2,3 |
| Page 707 | | | |
| Planetary Small Geared Motors Type PE 24 V DC | 2,1 W - 49 W | 22 - 600 | 0,46 - 6 |
| Page 709 | | | |
| Small Geared Motors Type SE 12 V DC 24 V DC | 7,8 W - 57 W | 79 - 833 | 0,2 - 3,2 |
| Page 711 | | | |
| Helical Geared Motors Type HR/I 230/400 V, 50 Hz | 0,09 kW - 1,5 kW | 5,8 - 407 | 9 - 603 |
| Page 714 | | | |
| Helical Geared Motors Type NR/I 230/400 V, 50 Hz | 0,12 kW - 1,5 kW | 3.2 - 417 | 3 - 668 |
| Page 719 | | | |

| Type | P | $n_2$ $min^{-1}$ | $Md_2$ Nm |
|---|---|---|---|
| Worm Geared Motors Type MEK and MEG 230/400 V, 50 Hz | 45 W - 250 W | 14 - 560 | 1,3 - 14 |
| Page 723 | | | |
| Worm Geared Motors Type MH with Hollow Shaft 230/400 V, 50 Hz | 180 W - 250 W | 19 - 560 | 3,6 - 14 |
| Page 725 | | | |
| Worm Helical Geared Motors Type SRM 230/400V, 50 Hz | 90 W - 120 W | 2,8 - 224 | 4,3 - 25 |
| Page 726 | | | |
| Worm Geared Motors Type R 230/400V, 50 Hz | 180 W - 250 W | 18 - 207 | 6,8 - 30 |
| Page 727 | | | |
| Worm Geared Motors Type RH with Hollow Shaft 230/400V, 50 Hz | 180 W - 250 W | 18 - 207 | 6,8 - 30 |
| Page 728 | | | |
| Worm Helical Geared Motors Type SRS 230/400V, 50 Hz | 90 W - 120 W | 2,4 - 190 | 5,1 - 10 |
| Page 729 | | | |
| Worm Geared Motors Type MZ 230/400V, 50 Hz | 90 W - 120 W | 0,9 - 224 | 3,7 - 10 |
| Page 730 | | | |
| Worm Geared Motors Type RL RM and RS 230/400V, 50 Hz | 90 W - 250 W | 0,6 - 224 | 3,7 - 60 |
| Page 731 | | | |
| Worm Geared Motors Type HMD/I 230/400V, 50 Hz | 0,09 kW - 1,5 kW | 9 - 200 | 3 - 351 |
| Page 734 | | | |
| Worm Geared Motors Type HMD/II 230/400V, 50 Hz | 0,09 kW - 1,50 kW | 9 - 200 | 3 - 351 |
| Page 739 | | | |
| Worm Geared Motors Type ZMD/I 230/400V, 50 Hz | 0,12 kW - 1,5 kW | 13,4 - 380,7 | 15 - 333 |
| Page 744 | | | |
| Continuously Variable Geared Motors Type MUN/I 230/400V, 50 Hz | 0,18 kW | 0,17 - 4200 | 0,27 - 70 |
| Page 753 | | | |

# Operating and maintenance instructions

## on the internet at www.maedler.de

## in the Section Downloads

On our website you can find operating and maintenance instructions in various languages for all our technically-sophisticated products. We are continuously extending this list of instructions.

| Instructions available: | Language | | |
|---|---|---|---|
| Bevel Gearboxes DZA, DZR | German | English | French |
| Bevel Gearboxes KU/I, KUM | German | English | French |
| Chain Tensioners SPANNBOX®, SPANNBOY® | Deutsch | English | |
| Continuously Variable Geared Motors MUN/I | German | English | |
| Couplings DX | German | English | |
| Couplings RN, RNG, RNH, RNI, RNK, RNT | German | English | |
| Couplings BW / BOS / BOZ | German | English | French |
| Electronic Drip Oilers ELO | German | English | |
| Frequency Converters FU6 | German | | |
| Frequency Converters RoFre 897 | German | | |
| Helical Gear Boxes BT/I | German | English | |
| Helical Geared Motor HR/I | German | English | |
| Helical Geared Motor NR/I | German | English | French |
| Linear Drives (Actuator Systems) GR/I | German | English | |
| Motor Controllers SFRG 05 | German | | |
| Motor Controllers SFRG 3 | German | | |
| Precision Worm Gear Sets | German | | |
| Safety Clutches CM | German | | |
| Safety Clutches SI | German | English | French |
| Shaft Mounted Gearboxes BOC/I | German | English | |
| Sliding Hubs FA | German | | |
| Sliding Hubs FS | German | English | |
| Sliding Hubs ROBA® | German | | |
| Sliding Hubs with Coupling RNR | German | | |
| Slip Clutches KF | German | English | |
| Slip Clutches R2, R6 | German | | |
| Standard Three-Phase-Motors SM/I | German | | |
| Taper Bushes | German | English | French |
| Telescopic Slides Accuride | German | English | French |
| Worm Geared Motors HMD I / HMD II | German | English | French |
| Worm-Geared Motors MEG / MEK / MH / MZ | German | English | French |
| Worm-Geared Motors R / RH / RL / RM / RS | German | English | French |
| Worm-Geared Motors SRM / SRS | German | English | French |
| Worm-Geared Motors SZM, ZMD | German | English | French |
| Worm Gear Screw Jacks NP/I | German | | |
| Worm Gear Units G/II | German | English | French |
| Worm Gear Units ZM | German | English | French |

## Helical Gear Boxes BT/I with Two Shaft Ends

**Casing:** Cast iron casing with thick walls and ribbed construction, sealed against oil leaks and dust.

**Gears:** Special steel, extremely hard wearing and case hardened. Smooth-running helical gear wheels with ground or scraped tooth profiles.

**Bearing:** Generously dimensioned bearings as standard version (heavy-duty bearings for higher overhung or thrust loads available at extra cost).

**Lubrication:** The gear boxes are delivered ready for work, filled with the correct level of oil or grease, which offers sufficient lubrication for about 10,000 operation hours, or for an operation period of max. 2 years, at a temperature of -30 to +80°C.

Before start up, the plastic plug must be taken out of the venting screw, otherwise excess pressure will build up inside the gearbox.

**Ordering details: e.g.: Type, Size, Ratio, Model, Product No.**

### Size 1

| Product No. | Ratio i | at $f_B$ = 1 $Mn_2$ Nm | at $n_1$ = 1380 $min^{-1}$* $n_2$ $min^{-1}$ | P kW | Permissible $n_1$* $min^{-1}$ | Weight kg |
|---|---|---|---|---|---|---|
| **400 100 01** | 2,90 | 24,2 | 476 | 1,27 | 4000 | 6,5 |
| **400 100 02** | 3,10 | 25,9 | 445 | 1,27 | 4000 | 6,5 |
| **400 100 03** | 3,31 | 27,6 | 417 | 1,27 | 4000 | 6,5 |
| **400 100 04** | 3,55 | 29,6 | 389 | 1,27 | 4000 | 6,5 |
| **400 100 05** | 3,81 | 31,8 | 362 | 1,27 | 4000 | 6,5 |
| **400 100 06** | 4,10 | 34,2 | 337 | 1,27 | 4000 | 6,5 |
| **400 100 07** | 4,43 | 37 | 311 | 1,27 | 4000 | 6,5 |
| **400 100 08** | 4,81 | 40,2 | 287 | 1,27 | 4000 | 6,5 |
| **400 100 09** | 5,23 | 43,7 | 264 | 1,27 | 4000 | 6,5 |
| **400 100 10** | 5,73 | 48 | 241 | 1,27 | 4000 | 6,5 |
| **400 100 11** | 6,30 | 50 | 219 | 1,21 | 4000 | 6,5 |
| **400 100 12** | 6,98 | 50 | 198 | 1,05 | 4000 | 6,5 |
| **400 100 13** | 7,79 | 33,3 | 177 | 0,65 | 4000 | 6,5 |
| **400 100 14** | 8,31 | 35,5 | 166 | 0,65 | 4000 | 6,5 |
| **400 100 15** | 8,89 | 38 | 155 | 0,65 | 4000 | 6,5 |
| **400 100 16** | 9,52 | 40,7 | 145 | 0,65 | 4000 | 6,5 |
| **400 100 17** | 10,23 | 43,7 | 135 | 0,65 | 4000 | 6,5 |
| **400 100 18** | 11,02 | 47,1 | 125 | 0,65 | 4000 | 6,5 |
| **400 100 19** | 11,90 | 50 | 116 | 0,64 | 4000 | 6,5 |
| **400 100 20** | 12,91 | 50 | 107 | 0,59 | 4000 | 6,5 |
| **400 100 21** | 14,06 | 50 | 98 | 0,54 | 4000 | 6,5 |
| **400 100 22** | 15,38 | 50 | 90 | 0,49 | 4000 | 6,5 |
| **400 100 23** | 16,93 | 50 | 82 | 0,45 | 4000 | 6,5 |
| **400 100 24** | 18,75 | 50 | 74 | 0,41 | 4000 | 6,5 |
| **400 100 25** | 21,11 | 40 | 65 | 0,29 | 4000 | 6,5 |
| **400 100 26** | 22,52 | 43 | 61 | 0,29 | 4000 | 6,5 |
| **400 100 27** | 24,08 | 46 | 57 | 0,29 | 4000 | 6,5 |
| **400 100 28** | 25,80 | 50 | 53 | 0,29 | 4000 | 6,5 |
| **400 100 29** | 27,71 | 50 | 50 | 0,27 | 4000 | 6,5 |
| **400 100 30** | 29,85 | 50 | 46 | 0,25 | 4000 | 6,5 |
| **400 100 31** | 32,25 | 50 | 43 | 0,24 | 4000 | 6,5 |
| **400 100 32** | 34,97 | 50 | 39 | 0,22 | 4000 | 6,5 |
| **400 100 33** | 38,09 | 50 | 36 | 0,20 | 4000 | 6,5 |
| **400 100 34** | 41,68 | 50 | 33 | 0,18 | 4000 | 6,5 |
| **400 100 35** | 45,87 | 50 | 30 | 0,17 | 4000 | 6,5 |
| **400 100 36** | 50,82 | 50 | 27 | 0,15 | 4000 | 6,5 |

* Lower and higher inputs than the given speeds $n_1$ are possible. Please enquire before application.
Dimensions tables see page 661.

*Connecting Shafts Page 766*

## Size 2

| Product No. | Ratio i | at $f_B$ = 1 $Mn_2$ Nm | at $n_1$ = 1380 $min^{-1}$* $n_2$ $min^{-1}$ | P kW | Permissible $n_1$* $min^{-1}$ | Weight kg |
|---|---|---|---|---|---|---|
| 400 110 01 | 2,39 | 68 | 579 | 3 | 4000 | 8 |
| 400 110 03 | 2,59 | 74 | 534 | 3 | 4000 | 8 |
| 400 110 04 | 2,81 | 80 | 491 | 3 | 4000 | 8 |
| 400 110 05 | 3,07 | 87 | 450 | 3 | 4000 | 8 |
| 400 110 06 | 3,36 | 96 | 411 | 3 | 4000 | 8 |
| 400 110 07 | 3,70 | 100 | 373 | 3 | 4000 | 8 |
| 400 110 08 | 4,03 | 100 | 343 | 3 | 4000 | 8 |
| 400 110 09 | 4,43 | 100 | 312 | 3 | 4000 | 8 |
| 400 110 10 | 4,90 | 100 | 282 | 3 | 4000 | 8 |
| 400 110 11 | 5,46 | 100 | 253 | 2,79 | 4000 | 8 |
| 400 110 12 | 6,13 | 100 | 225 | 2,48 | 4000 | 8 |
| 400 110 13 | 7,04 | 98 | 196 | 2,12 | 4000 | 8 |
| 400 110 14 | 7,68 | 100 | 180 | 1,98 | 4000 | 8 |
| 400 110 15 | 8,41 | 100 | 164 | 1,81 | 4000 | 8 |
| 400 110 16 | 9,26 | 100 | 149 | 1,64 | 4000 | 8 |
| 400 110 17 | 10,24 | 100 | 135 | 1,49 | 4000 | 8 |
| 400 110 18 | 11,40 | 100 | 121 | 1,33 | 4000 | 8 |
| 400 110 19 | 12,80 | 100 | 108 | 1,19 | 4000 | 8 |
| 400 110 20 | 13,57 | 98 | 102 | 1,10 | 4000 | 8 |
| 400 110 21 | 14,80 | 100 | 93 | 1,03 | 4000 | 8 |
| 400 110 23 | 16,21 | 100 | 83 | 0,94 | 4000 | 8 |
| 400 110 24 | 17,84 | 100 | 77 | 0,85 | 4000 | 8 |
| 400 110 25 | 19,73 | 100 | 71 | 0,77 | 4000 | 8 |
| 400 110 26 | 21,00 | 93 | 66 | 0,67 | 4000 | 8 |
| 400 110 27 | 22,76 | 96 | 61 | 0,64 | 4000 | 8 |
| 400 110 28 | 24,75 | 98 | 56 | 0,60 | 4000 | 8 |
| 400 110 29 | 27,00 | 100 | 51 | 0,56 | 4000 | 8 |
| 400 110 30 | 29,57 | 100 | 47 | 0,51 | 4000 | 8 |
| 400 110 31 | 32,54 | 100 | 42 | 0,47 | 4000 | 8 |
| 400 110 32 | 36,00 | 100 | 38 | 0,42 | 4000 | 8 |
| 400 110 33 | 40,09 | 100 | 34 | 0,38 | 4000 | 8 |
| 400 110 34 | 45,00 | 100 | 31 | 0,34 | 4000 | 8 |
| 400 110 35 | 51,00 | 100 | 27 | 0,30 | 4000 | 8 |

## Size 3

| Product No. | Ratio i | at $f_B$ = 1 $Mn_2$ Nm | at $n_1$ = 1380 $min^{-1}$* $n_2$ $min^{-1}$ | P kW | Permissible $n_1$* $min^{-1}$ | Weight kg |
|---|---|---|---|---|---|---|
| 400 120 01 | 2,13 | 117 | 648 | 8,36 | 4000 | 13 |
| 400 120 03 | 2,51 | 138 | 550 | 8,37 | 4000 | 13 |
| 400 120 06 | 2,99 | 165 | 462 | 8,40 | 4000 | 13 |
| 400 120 08 | 3,62 | 200 | 382 | 8,41 | 4000 | 13 |
| 400 120 10 | 4,01 | 200 | 344 | 7,59 | 4000 | 13 |
| 400 120 12 | 5,03 | 200 | 275 | 6,05 | 4000 | 13 |
| 400 120 14 | 6,04 | 184 | 229 | 4,64 | 4000 | 13 |
| 400 120 15 | 6,69 | 200 | 206 | 4,55 | 4000 | 13 |
| 400 120 16 | 7,47 | 200 | 185 | 4,07 | 4000 | 13 |
| 400 120 17 | 8,40 | 200 | 164 | 3,62 | 4000 | 13 |
| 400 120 18 | 9,53 | 200 | 145 | 3,19 | 4000 | 13 |
| 400 120 19 | 9,62 | 183 | 143 | 2,89 | 4000 | 13 |
| 400 120 20 | 10,56 | 200 | 131 | 2,88 | 4000 | 13 |
| 400 120 21 | 11,64 | 200 | 119 | 2,61 | 4000 | 13 |
| 400 120 22 | 12,91 | 200 | 107 | 2,36 | 4000 | 13 |
| 400 120 23 | 14,40 | 200 | 96 | 2,11 | 4000 | 13 |
| 400 120 24 | 16,19 | 200 | 85 | 1,88 | 4000 | 13 |
| 400 120 25 | 18,38 | 200 | 75 | 1,65 | 4000 | 13 |
| 400 120 26 | 19,60 | 200 | 70 | 1,55 | 4000 | 13 |
| 400 120 27 | 21,61 | 200 | 64 | 1,41 | 4000 | 13 |
| 400 120 28 | 23,96 | 200 | 58 | 1,27 | 4000 | 13 |
| 400 120 29 | 26,73 | 200 | 52 | 1,14 | 4000 | 13 |
| 400 120 30 | 28,15 | 200 | 49 | 1,08 | 4000 | 13 |
| 400 120 31 | 30,90 | 200 | 45 | 0,98 | 4000 | 13 |
| 400 120 32 | 34,07 | 200 | 41 | 0,89 | 4000 | 13 |
| 400 120 33 | 37,77 | 200 | 37 | 0,81 | 4000 | 13 |
| 400 120 34 | 42,14 | 200 | 33 | 0,72 | 4000 | 13 |
| 400 120 35 | 47,38 | 200 | 29 | 0,64 | 4000 | 13 |
| 400 120 36 | 53,79 | 200 | 26 | 0,57 | 4000 | 13 |

* Lower and higher inputs than the given speeds $n_1$ are possible. Please enquire before application.
Dimensions tables see page 661.

## Size 4

| Product No. | Ratio i | at $f_B$ = 1 $Mn_2$ Nm | at $n_1$ = 1400 $min^{-1}$* $n_2$ $min^{-1}$ | P kW | Permissible $n_1$* $min^{-1}$ | Weight kg |
|---|---|---|---|---|---|---|
| **400 130 01** | 2,22 | 147 | 632 | 10,20 | 4000 | 21 |
| **400 130 03** | 2,40 | 159 | 584 | 10,20 | 4000 | 21 |
| **400 130 05** | 2,83 | 188 | 495 | 10,30 | 4000 | 21 |
| **400 130 07** | 3,38 | 225 | 414 | 10,30 | 4000 | 21 |
| **400 130 09** | 4,12 | 274 | 340 | 10,30 | 4000 | 21 |
| **400 130 10** | 4,59 | 300 | 305 | 10,10 | 4000 | 21 |
| **400 130 11** | 5,16 | 300 | 272 | 8,98 | 4000 | 21 |
| **400 130 12** | 5,29 | 226 | 265 | 6,60 | 4000 | 21 |
| **400 130 13** | 5,89 | 252 | 238 | 6,60 | 4000 | 21 |
| **400 130 14** | 6,62 | 283 | 212 | 6,60 | 4000 | 21 |
| **400 130 15** | 6,82 | 181 | 205 | 4,10 | 4000 | 21 |
| **400 130 17** | 8,10 | 215 | 173 | 4,10 | 4000 | 21 |
| **400 130 18** | 8,87 | 236 | 158 | 4,11 | 4000 | 21 |
| **400 130 19** | 9,77 | 260 | 143 | 4,11 | 4000 | 21 |
| **400 130 20** | 10,81 | 287 | 130 | 4,10 | 4000 | 21 |
| **400 130 21** | 12,04 | 300 | 116 | 3,84 | 4000 | 21 |
| **400 130 22** | 13,52 | 300 | 104 | 3,42 | 4000 | 21 |
| **400 130 23** | 14,19 | 202 | 99 | 2,20 | 4000 | 21 |
| **400 130 24** | 15,39 | 219 | 91 | 2,20 | 4000 | 21 |
| **400 130 25** | 16,75 | 239 | 84 | 2,20 | 4000 | 21 |
| **400 130 26** | 18,28 | 261 | 77 | 2,20 | 4000 | 21 |
| **400 130 27** | 20,03 | 286 | 70 | 2,20 | 4000 | 21 |
| **400 130 28** | 22,05 | 300 | 64 | 2,10 | 4000 | 21 |
| **400 130 29** | 24,40 | 300 | 57 | 1,90 | 4000 | 21 |
| **400 130 30** | 27,19 | 300 | 52 | 1,70 | 4000 | 21 |
| **400 130 31** | 30,53 | 300 | 46 | 1,52 | 4000 | 21 |
| **400 130 32** | 33,42 | 300 | 42 | 1,39 | 4000 | 21 |
| **400 130 33** | 36,99 | 300 | 38 | 1,25 | 4000 | 21 |
| **400 130 34** | 41,21 | 300 | 34 | 1,12 | 4000 | 21 |
| **400 130 35** | 46,28 | 300 | 30 | 1,00 | 4000 | 21 |

## Size 5

| Product No. | Ratio i | at $f_B$ = 1 $Mn_2$ Nm | at $n_1$ = 1400 $min^{-1}$* $n_2$ $min^{-1}$ | P kW | Permissible $n_1$* $min^{-1}$ | Weight kg |
|---|---|---|---|---|---|---|
| **400 140 01** | 2,11 | 140 | 665 | 10,30 | 4000 | 28 |
| **400 140 03** | 2,29 | 152 | 611 | 10,20 | 4000 | 28 |
| **400 140 05** | 2,50 | 166 | 560 | 10,20 | 4000 | 28 |
| **400 140 07** | 2,74 | 182 | 512 | 10,30 | 4000 | 28 |
| **400 140 08** | 3,01 | 200 | 466 | 10,30 | 4000 | 28 |
| **400 140 10** | 3,32 | 221 | 422 | 10,30 | 4000 | 28 |
| **400 140 11** | 3,68 | 245 | 380 | 10,30 | 4000 | 28 |
| **400 140 12** | 4,11 | 274 | 340 | 10,30 | 4000 | 28 |
| **400 140 13** | 4,63 | 308 | 302 | 10,30 | 4000 | 28 |
| **400 140 14** | 5,26 | 350 | 266 | 10,30 | 4000 | 28 |
| **400 140 15** | 5,94 | 254 | 236 | 6,60 | 4000 | 28 |
| **400 140 16** | 6,75 | 289 | 207 | 6,61 | 4000 | 28 |
| **400 140 17** | 7,18 | 191 | 195 | 4,11 | 4000 | 28 |
| **400 140 18** | 7,89 | 210 | 178 | 4,11 | 4000 | 28 |
| **400 140 19** | 8,70 | 231 | 161 | 4,10 | 4000 | 28 |
| **400 140 20** | 9,66 | 257 | 145 | 4,11 | 4000 | 28 |
| **400 140 21** | 10,79 | 287 | 130 | 4,10 | 4000 | 28 |
| **400 140 22** | 12,14 | 323 | 115 | 4,10 | 4000 | 28 |
| **400 140 23** | 13,80 | 367 | 101 | 4,10 | 4000 | 28 |
| **400 140 24** | 14,80 | 211 | 95 | 2,20 | 4000 | 28 |
| **400 140 25** | 16,20 | 231 | 86 | 2,20 | 4000 | 28 |
| **400 140 26** | 17,80 | 254 | 79 | 2,20 | 4000 | 28 |
| **400 140 27** | 19,65 | 280 | 71 | 2,20 | 4000 | 28 |
| **400 140 28** | 21,81 | 311 | 64 | 2,20 | 4000 | 28 |
| **400 140 29** | 24,36 | 347 | 58 | 2,20 | 4000 | 28 |
| **400 140 30** | 27,42 | 391 | 51 | 2,20 | 4000 | 28 |
| **400 140 31** | 31,15 | 444 | 45 | 2,20 | 4000 | 28 |
| **400 140 32** | 33,06 | 314 | 42 | 1,47 | 4000 | 28 |
| **400 140 33** | 36,92 | 351 | 38 | 1,47 | 4000 | 28 |
| **400 140 34** | 41,56 | 395 | 34 | 1,47 | 4000 | 28 |
| **400 140 35** | 47,22 | 450 | 30 | 1,47 | 4000 | 28 |

* Lower and higher inputs than the given speeds $n_1$ are possible. Please enquire before application.

Dimensions tables see page 661.

## Size 6

| Product No. | Ratio i | at $f_B$ = 1 $Mn_2$ Nm | at $n_1$ = 1420 $min^{-1}$* $n_2$ $min^{-1}$ | P kW | Permissible $n_1$* $min^{-1}$ | Weight kg |
|---|---|---|---|---|---|---|
| 400 150 01 | 2,38 | 294 | 597 | 19,30 | 4000 | 32 |
| 400 150 03 | 2,82 | 349 | 503 | 19,30 | 4000 | 32 |
| 400 150 05 | 3,40 | 420 | 418 | 19,30 | 4000 | 32 |
| 400 150 07 | 3,75 | 463 | 379 | 19,30 | 4000 | 32 |
| 400 150 09 | 4,65 | 574 | 306 | 19,30 | 4000 | 32 |
| 400 150 11 | 5,63 | 405 | 252 | 11,20 | 4000 | 32 |
| 400 150 12 | 6,22 | 447 | 228 | 11,20 | 4000 | 32 |
| 400 150 13 | 6,9 | 496 | 206 | 11,20 | 4000 | 32 |
| 400 150 14 | 7,71 | 554 | 184 | 11,20 | 4000 | 32 |
| 400 150 15 | 8,68 | 623 | 164 | 11,20 | 4000 | 32 |
| 400 150 16 | 9,86 | 700 | 144 | 11,10 | 4000 | 32 |
| 400 150 17 | 10,90 | 566 | 130 | 8,10 | 4000 | 32 |
| 400 150 18 | 12,18 | 632 | 117 | 8,10 | 4000 | 32 |
| 400 150 19 | 13,71 | 700 | 104 | 8,00 | 4000 | 32 |
| 400 150 20 | 15,58 | 700 | 91 | 7,00 | 4000 | 32 |
| 400 150 21 | 16,43 | 667 | 86 | 6,35 | 4000 | 32 |
| 400 150 22 | 18,13 | 683 | 78 | 5,89 | 4000 | 32 |
| 400 150 24 | 20,13 | 700 | 71 | 5,44 | 4000 | 32 |
| 400 150 25 | 22,48 | 700 | 63 | 4,87 | 4000 | 32 |
| 400 150 26 | 25,30 | 700 | 56 | 4,33 | 4000 | 32 |
| 400 150 27 | 28,00 | 700 | 51 | 3,91 | 4000 | 32 |
| 400 150 28 | 31,27 | 700 | 45 | 3,50 | 4000 | 32 |
| 400 150 29 | 35,20 | 700 | 40 | 3,11 | 4000 | 32 |
| 400 150 30 | 37,92 | 700 | 38 | 2,89 | 4000 | 32 |
| 400 150 31 | 42,68 | 700 | 33 | 2,57 | 4000 | 32 |
| 400 150 32 | 48,50 | 700 | 29 | 2,26 | 4000 | 32 |

## Size 7

| Product No. | Ratio i | at $f_B$ = 1 $Mn_2$ Nm | at $n_1$ = 1420 $min^{-1}$* $n_2$ $min^{-1}$ | P kW | Permissible $n_1$* $min^{-1}$ | Weight kg |
|---|---|---|---|---|---|---|
| 400 160 01 | 2,38 | 294 | 597 | 19,30 | 4000 | 34 |
| 400 160 03 | 2,82 | 349 | 503 | 19,30 | 4000 | 34 |
| 400 160 05 | 3,40 | 420 | 418 | 19,30 | 4000 | 34 |
| 400 160 07 | 3,75 | 463 | 379 | 19,30 | 4000 | 34 |
| 400 160 09 | 4,65 | 574 | 306 | 19,30 | 4000 | 34 |
| 400 160 11 | 5,63 | 405 | 252 | 11,20 | 4000 | 34 |
| 400 160 12 | 6,22 | 447 | 228 | 11,20 | 4000 | 34 |
| 400 160 13 | 6,90 | 496 | 206 | 11,20 | 4000 | 34 |
| 400 160 14 | 7,71 | 554 | 184 | 11,20 | 4000 | 34 |
| 400 160 15 | 8,68 | 623 | 164 | 11,20 | 4000 | 34 |
| 400 160 16 | 9,86 | 700 | 144 | 11,10 | 4000 | 34 |
| 400 160 17 | 10,90 | 566 | 130 | 8,10 | 4000 | 34 |
| 400 160 18 | 12,18 | 632 | 117 | 8,10 | 4000 | 34 |
| 400 160 19 | 13,71 | 700 | 104 | 8,00 | 4000 | 34 |
| 400 160 20 | 15,58 | 700 | 91 | 7,00 | 4000 | 34 |
| 400 160 21 | 16,43 | 667 | 86 | 6,35 | 4000 | 34 |
| 400 160 22 | 18,13 | 683 | 78 | 5,89 | 4000 | 34 |
| 400 160 24 | 20,13 | 700 | 71 | 5,44 | 4000 | 34 |
| 400 160 25 | 22,48 | 700 | 63 | 4,87 | 4000 | 34 |
| 400 160 26 | 25,30 | 700 | 56 | 4,33 | 4000 | 34 |
| 400 160 27 | 28,00 | 700 | 51 | 3,91 | 4000 | 34 |
| 400 160 28 | 31,27 | 700 | 45 | 3,50 | 4000 | 34 |
| 400 160 29 | 35,20 | 700 | 40 | 3,11 | 4000 | 34 |
| 400 160 30 | 37,92 | 700 | 38 | 2,89 | 4000 | 34 |

* Lower and higher inputs than the given speeds $n_1$ are possible. Please enquire before application.
Dimensions tables see page 661.

## Dimension Table for Helical Gearboxes BT/I With Two Shaft Ends

### Foot Mounting Model B 3

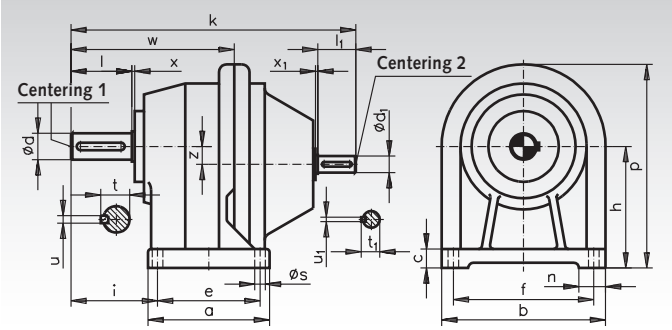


### Flange Mounting Model B 5

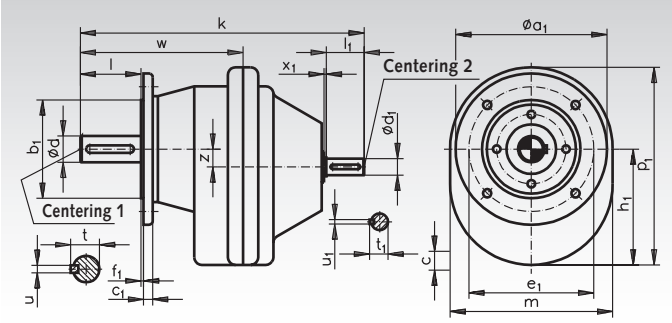


**Selection of available flanges:** Mountings according to DIN 42948. Up to 300 mm diameter $a_1$ the recess Ø $b_1$ of the output flanges is manufactured according to ISO j6, over 300mm according to ISO h6.

| Size | | | | Ø $a_1$ | Ø $b_1$ | $c_1$ | Ø $e_1$ | $f_1$ | $s_1$ |
|---|---|---|---|---|---|---|---|---|---|
| | | | 1 | 120 | 80 | 10 | 100 | 3 | 4 x Ø 7 |
| | | 3 | 2 | 140 | 95 | 10 | 115 | 3 | 4 x Ø 9 |
| | 4 | 3 | 2 | 160 | 110 | 10 | 130 | 3,5 | 4 x Ø 9 |
| 5 | 4 | 3 | 2 | 200 | 130 | 12 | 165 | 3,5 | 4 x Ø11 |
| 6 | 4 | 3 | | 250 | 180 | 16 | 215 | 4 | 4 x Ø14 |
| 7 | | | | 300 | 230 | 20 | 265 | 4 | 4 x Ø14 |

The shaft ends Ø d are machined according to ISO k6.
Feather keys according to DIN 6885.

| Size | a mm | b mm | c mm | Ø d x l mm | Ø $d_1$ x $l_1$ mm | e mm | f mm | h mm | $h_1$ mm | i mm | k mm | m mm | n mm | p mm | $p_1$ mm | Ø s mm | t mm | $t_1$ mm | u mm | $u_1$ mm | w mm | x mm | $x_1$ mm | z mm | Centering 1 DIN | Centering 2 332/2 |
|---|---|---|---|---|---|---|---|---|---|---|---|---|---|---|---|---|---|---|---|---|---|---|---|---|---|---|
| 1 | 78 | 130 | 12 | 16x40 | 11x23 | 50 | 110 | 86 | 84 | 52 | 210 | 120 | 20 | 146 | 144 | 9 | 18 | 12,5 | 5 | 4 | 120 | 2 | 2 | 0 | M5 | M4 |
| 2 | 110 | 135 | 14 | 20x40 | 14x30 | 85 | 105 | 102 | 101 | 67,5 | 232 | 135 | 30 | 170 | 169 | 9 | 22,5 | 16 | 6 | 5 | 129 | 2 | 2 | 0 | M6 | M5 |
| 3 | 124 | 154 | 16 | 25x60 | 16x40 | 100 | 130 | 125 | 123 | 97 | 289 | 154 | 24 | 202 | 200 | 11 | 28 | 18 | 8 | 5 | 169 | 3 | 2 | 0 | M10 | M5 |
| 4 | 175 | 190 | 20 | 30x70 | 22x50 | 140 | 155 | 130 | 128 | 115 | 370 | 170 | 35 | 215 | 213 | 14 | 33 | 24,5 | 8 | 6 | 208 | 3 | 2 | 0 | M10 | M8 |
| 5 | 160 | 215 | 25 | 35x80 | 22x50 | 135 | 185 | 160 | 153 | 114 | 375 | 215 | 35 | 268 | 261 | 14 | 38 | 24,5 | 10 | 6 | 215 | 4 | 2 | 23,5 | M12 | M8 |
| 6 | 164 | 215 | 25 | 40x80 | 25x60 | 134 | 175 | 175 | 173 | 120 | 386 | 215 | 40 | 283 | 281 | 14 | 43 | 28 | 12 | 8 | 224 | 4 | 2 | 0 | M16 | M10 |
| 7 | 164 | 215 | 25 | 50x100 | 25x60 | 134 | 175 | 175 | 173 | 140 | 406 | 215 | 40 | 283 | 281 | 14 | 53,5 | 28 | 14 | 8 | 244 | 4 | 2 | 0 | M16 | M10 |

## Permissible Radial and Axial Loads of the Output Shaft

| Size | | Output Speeds $n_2$ [$min^{-1}$] 16 | 25 | 36 | 50 | 80 | 125 | ≥ 130 |
|---|---|---|---|---|---|---|---|---|
| 1 | $F_R$ [N] | 600 | 500 | 450 | 400 | 350 | 300 | 250 |
| 1 | $F_A$ [N] | 450 | 400 | 350 | 320 | 300 | 250 | 200 |
| 2 | $F_R$ [N] | 1250 | 1100 | 1000 | 900 | 800 | 700 | 600 |
| 2 | $F_A$ [N] | 500 | 450 | 400 | 360 | 320 | 280 | 250 |
| 3 | $F_R$ [N] | 2000 | 1800 | 1700 | 1600 | 1500 | 1300 | 1200 |
| 3 | $F_A$ [N] | 800 | 720 | 680 | 640 | 600 | 520 | 480 |
| 4 | $F_R$ [N] | 3000 | 2700 | 2500 | 2300 | 2100 | 1700 | 1500 |
| 4 | $F_A$ [N] | 1200 | 1080 | 1000 | 920 | 840 | 680 | 600 |
| 5 | $F_R$ [N] | 3600 | 3400 | 3150 | 2900 | 2500 | 2000 | 1800 |
| 5 | $F_A$ [N] | 1440 | 1370 | 1260 | 1150 | 1010 | 800 | 720 |
| 6 | $F_R$ [N] | 4000 | 3800 | 3500 | 3200 | 2800 | 2200 | 2000 |
| 6 | $F_A$ [N] | 1600 | 1520 | 1400 | 1280 | 1120 | 880 | 800 |
| 7 | $F_R$ [N] | 10400 | 9880 | 9100 | 8320 | 7280 | 5720 | 5200 |
| 7 | $F_A$ [N] | 4160 | 3950 | 3640 | 3330 | 2910 | 2290 | 2080 |

Size 7 is as standard equipped with a stronger bearing system.

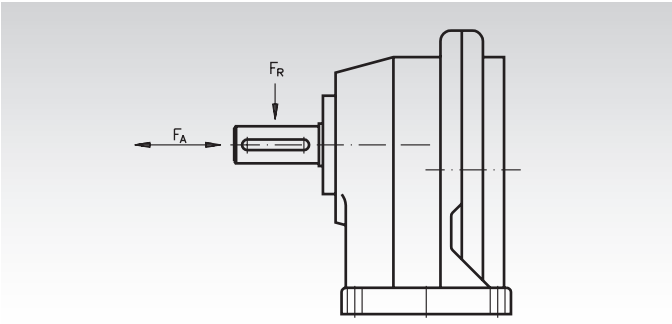


The stated values for radial load ($F_R$) assume that the impact of the load is in the centre of the shaft length (see drawing). If both radial and axial forces occur, the permissible radial force ($F_R$) indicated in the table is reduced by the value of the occurring axial force ($F_A$).

## Gearbox Selection for Operating Factors Larger Than $f_B$ = 1

In addition to the input power (P) and output speed ($n_2$) you also enter the respective **operating factor ($f_B$)** into the formula. When selecting the gearbox from the table, the table value **($M_n$) must be no smaller than** the calculated figure ($M_n$).

$$M_{n_2} = \frac{P \times 9550}{n_2} \times f_B$$

$M_{n_2}$ [Nm] = Output torque.
P [kW] = Input power.
$n_2$ [$min^{-1}$] = Output speed.
$f_B$ = Operating factor.

## Shaft-Mounted Flat Gearboxes BOC/I, 2-Stage

**General data:** Compact design for confined spaces. Ratios of i = approx. 3.5:1 to 59:1. Larger ratios on request. Input power of 0.3 to 11.2 kW.

Version A: With hollow shaft on output side = Standard.
Version B: With torque arm.
Version C: With flange on the output side.
Version D: With foot mounting brackets, see drawing page 606.
Version E: With foot mounting brackets, see drawing page 606.
Version F: With single-sided solid output shaft.
(Version B - F on request).

**Housing:** Rigid, ribbed grey cast iron housing, thus quiet, low-vibration running characteristics. Fully sealed against oil leaks and protected against water jets.

**Gears:** The helical gear wheels are made from heat-treated and case-hardened steel. The gearing is hardened and precisely machined.

**Bearing:** Generously-dimensioned roller bearings.

**Input shaft/end shield:** The shaft tolerances, and the flange adapters which can be delivered on request, are suited for IEC standard motors.

**Lubrication:** The gear boxes are delivered ready for work, filled with the correct level of oil or grease (ambient temperature -10°C to 50°C), which offers sufficient lubrication for about 10,000 operation hours, or for an operation period of max. 2 years.

Before start up, the plastic plug must be taken out of the venting screw.

**Ordering details: e.g.: Type, Version (A-F), Mounting Position ( 1 - 5 ), Size, Ratio, Product No.**

Foot mounting against extra charge.

### Possible Combinations

1 Shaft-mounted gearboxes to connect to flange motors, motor shaft dimensions according to factory standard.
2 Shaft-mounted geared motor.
3 Shaft-mounted gearboxes with shaft end on input side.
4 Shaft-mounted gearboxes with assembled flange to take up standard IEC-motors.
5 Shaft-mounted geared motor with overload safety clutch.
6 Shaft-mounted geared motor with break-clutch combination.
7 Shaft-mounted gearboxes with helical-geared motor.
8 Shaft-mounted gearboxes with worm-gearbox.
9 Shaft-mounted gearboxes with belt/variable-speed geared motor.
10 Shaft-mounted gearboxes with friction wheel/variable-speed geared motor.
11 Shaft-mounted gearboxes with single or double-sided fixed output shaft.
12 Shaft-mounted gearboxes with output flange.

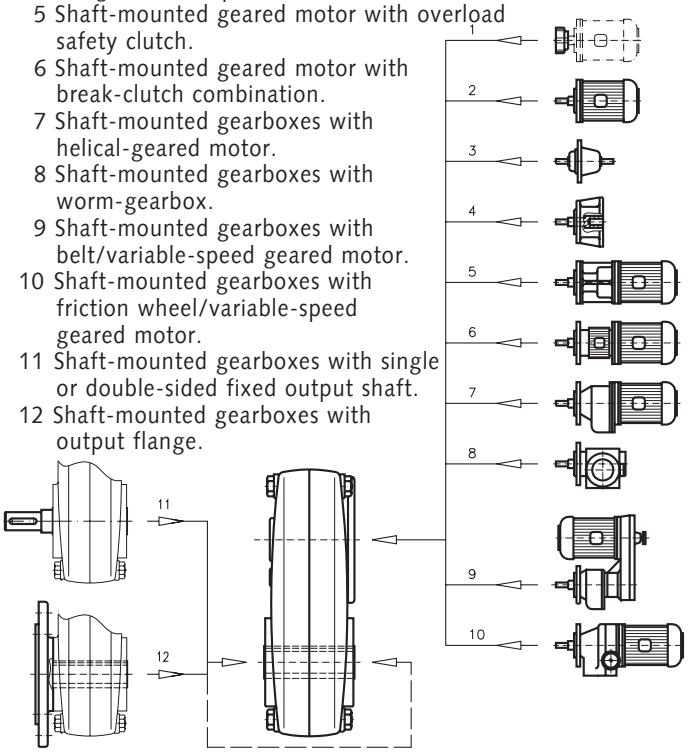


### Mounting Positions

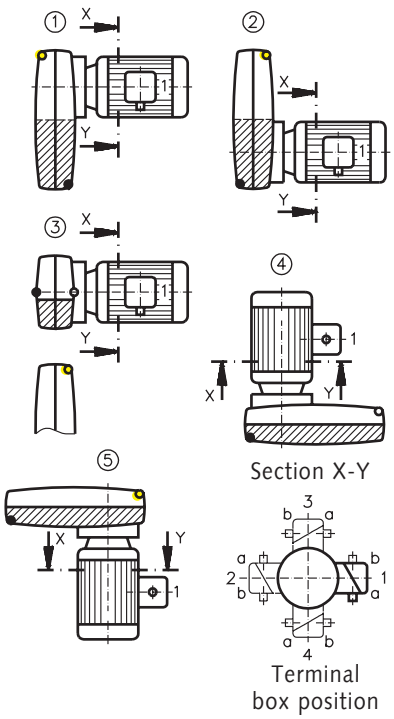


Lubricant Level
Venting Screw
Drain plug

## Size 0, Version A

| Product No. | Ratio i | $M_{2max}$ Nm | at $n_1$ = 1380 $min^{-1}$ and $f_B$ = 1 $n_2$ $min^{-1}$ | $P_{max}$ kW | Weight kg |
|---|---|---|---|---|---|
| 400 290 01 | 3,69 | 105 | 373,8 | 4,3 | 8 |
| 400 290 02 | 3,97 | 113 | 347,7 | 4,3 | 8 |
| 400 290 03 | 4,28 | 122 | 322,4 | 4,3 | 8 |
| 400 290 04 | 4,63 | 125 | 297,8 | 4,1 | 8 |
| 400 290 05 | 4,76 | 122 | 290,2 | 3,9 | 8 |
| 400 290 06 | 5,13 | 125 | 269 | 3,7 | 8 |
| 400 290 07 | 5,55 | 125 | 248,5 | 3,4 | 8 |
| 400 290 08 | 6,04 | 125 | 228,6 | 3,1 | 8 |
| 400 290 09 | 6,60 | 125 | 209,2 | 2,9 | 8 |
| 400 290 10 | 7,25 | 125 | 190,4 | 2,6 | 8 |
| 400 290 11 | 8,02 | 125 | 172,1 | 2,4 | 8 |
| 400 290 12 | 8,94 | 125 | 154,4 | 2,1 | 8 |
| 400 290 13 | 9,94 | 125 | 138,8 | 1,9 | 8 |
| 400 290 14 | 10,72 | 125 | 128,7 | 1,8 | 8 |
| 400 290 15 | 11,61 | 124 | 118,9 | 1,6 | 8 |
| 400 290 16 | 12,62 | 125 | 109,4 | 1,5 | 8 |
| 400 290 17 | 13,78 | 125 | 100,1 | 1,4 | 8 |
| 400 290 18 | 15,15 | 125 | 91,1 | 1,3 | 8 |
| 400 290 19 | 16,76 | 125 | 82,4 | 1,1 | 8 |
| 400 290 20 | 18,69 | 125 | 73,8 | 1,0 | 8 |
| 400 290 21 | 20,66 | 125 | 66,8 | 0,92 | 8 |
| 400 290 22 | 22,36 | 125 | 61,7 | 0,85 | 8 |
| 400 290 23 | 24,31 | 125 | 56,8 | 0,78 | 8 |
| 400 290 24 | 26,56 | 125 | 51,9 | 0,72 | 8 |
| 400 290 25 | 29,19 | 125 | 47,3 | 0,65 | 8 |
| 400 290 26 | 32,29 | 125 | 42,7 | 0,59 | 8 |
| 400 290 27 | 34,94 | 125 | 39,5 | 0,54 | 8 |
| 400 290 28 | 37,69 | 125 | 36,6 | 0,50 | 8 |
| 400 290 29 | 40,80 | 125 | 33,8 | 0,47 | 8 |
| 400 290 30 | 44,36 | 125 | 31,1 | 0,43 | 8 |
| 400 290 31 | 48,46 | 125 | 28,5 | 0,39 | 8 |
| 400 290 32 | 53,25 | 125 | 25,9 | 0,36 | 8 |
| 400 290 33 | 58,91 | 125 | 23,4 | 0,32 | 8 |
| 400 290 34 | 65,70 | 125 | 21,0 | 0,29 | 8 |

## Size 1, Version A

| Product No. | Ratio i | $M_{2max}$ Nm | at $n_1$ = 1380 $min^{-1}$ and $f_B$ = 1 $n_2$ $min^{-1}$ | $P_{max}$ kW | Weight kg |
|---|---|---|---|---|---|
| 400 300 01 | 3,34 | 184 | 413,6 | 8,4 | 12,5 |
| 400 300 02 | 3,58 | 197 | 385,2 | 8,4 | 12,5 |
| 400 300 03 | 3,86 | 213 | 357,7 | 8,4 | 12,5 |
| 400 300 04 | 4,17 | 230 | 331,2 | 8,4 | 12,5 |
| 400 300 05 | 4,52 | 250 | 305,5 | 8,4 | 12,5 |
| 400 300 06 | 4,92 | 250 | 280,6 | 7,7 | 12,5 |
| 400 300 07 | 5,38 | 250 | 256,5 | 7,1 | 12,5 |
| 400 300 08 | 5,92 | 250 | 233,1 | 6,4 | 12,5 |
| 400 300 09 | 6,44 | 196 | 214,2 | 4,6 | 12,5 |
| 400 300 10 | 6,96 | 212 | 198,3 | 4,6 | 12,5 |
| 400 300 11 | 7,54 | 229 | 182,9 | 4,6 | 12,5 |
| 400 300 12 | 8,21 | 250 | 168,0 | 4,6 | 12,5 |
| 400 300 13 | 8,98 | 250 | 153,6 | 4,2 | 12,5 |
| 400 300 14 | 9,89 | 250 | 139,6 | 3,8 | 12,5 |
| 400 300 15 | 10,75 | 204 | 128,4 | 2,9 | 12,5 |
| 400 300 16 | 11,54 | 219 | 119,6 | 2,9 | 12,5 |
| 400 300 17 | 12,42 | 236 | 111,1 | 2,9 | 12,5 |
| 400 300 18 | 13,42 | 250 | 102,8 | 2,8 | 12,5 |
| 400 300 19 | 14,55 | 250 | 94,8 | 2,6 | 12,5 |
| 400 300 20 | 15,84 | 250 | 87,1 | 2,4 | 12,5 |
| 400 300 21 | 17,33 | 250 | 79,6 | 2,2 | 12,5 |
| 400 300 22 | 19,07 | 250 | 72,4 | 2,0 | 12,5 |
| 400 300 23 | 19,94 | 227 | 69,2 | 1,7 | 12,5 |
| 400 300 24 | 21,41 | 244 | 64,4 | 1,7 | 12,5 |
| 400 300 25 | 23,06 | 250 | 59,8 | 1,6 | 12,5 |
| 400 300 26 | 24,91 | 250 | 55,4 | 1,5 | 12,5 |
| 400 300 27 | 27,00 | 250 | 51,1 | 1,4 | 12,5 |
| 400 300 28 | 29,40 | 250 | 46,9 | 1,3 | 12,5 |
| 400 300 29 | 32,16 | 250 | 42,9 | 1,2 | 12,5 |
| 400 300 30 | 35,39 | 250 | 39,0 | 1,1 | 12,5 |
| 400 300 31 | 36,35 | 250 | 38,0 | 1,0 | 12,5 |
| 400 300 32 | 39,27 | 250 | 35,1 | 0,97 | 12,5 |
| 400 300 33 | 42,57 | 250 | 32,4 | 0,89 | 12,5 |
| 400 300 34 | 46,35 | 250 | 29,8 | 0,82 | 12,5 |
| 400 300 35 | 50,71 | 250 | 27,2 | 0,75 | 12,5 |
| 400 300 36 | 55,79 | 250 | 24,7 | 0,68 | 12,5 |

Dimensions tables see page 665.

## Size 2, Version A

| Product No. | Ratio i | $M_{2max}$ Nm | at $n_1$ = 1400 $min^{-1}$ and $f_B$ = 1 $n_2$ $min^{-1}$ | $P_{max}$ kW | Weight kg |
|---|---|---|---|---|---|
| 400 320 01 | 3,55 | 236 | 394,8 | 10,3 | 19,5 |
| 400 320 02 | 3,80 | 253 | 368,3 | 10,3 | 19,5 |
| 400 320 03 | 4,09 | 272 | 342,6 | 10,3 | 19,5 |
| 400 320 04 | 4,41 | 293 | 317,6 | 10,3 | 19,5 |
| 400 320 05 | 4,77 | 317 | 293,4 | 10,3 | 19,5 |
| 400 320 06 | 5,19 | 345 | 269,9 | 10,3 | 19,5 |
| 400 320 07 | 5,67 | 377 | 247,0 | 10,3 | 19,5 |
| 400 320 08 | 6,12 | 262 | 228,8 | 6,6 | 19,5 |
| 400 320 09 | 6,65 | 284 | 210,4 | 6,6 | 19,5 |
| 400 320 10 | 7,27 | 311 | 192,6 | 6,6 | 19,5 |
| 400 320 11 | 7,65 | 203 | 182,9 | 4,1 | 19,5 |
| 400 320 12 | 8,15 | 217 | 171,8 | 4,1 | 19,5 |
| 400 320 13 | 8,69 | 231 | 161,0 | 4,1 | 19,5 |
| 400 320 14 | 9,30 | 247 | 150,6 | 4,1 | 19,5 |
| 400 320 15 | 9,97 | 265 | 140,5 | 4,1 | 19,5 |
| 400 320 16 | 10,72 | 285 | 130,7 | 4,1 | 19,5 |
| 400 320 17 | 11,56 | 307 | 121,1 | 4,1 | 19,5 |
| 400 320 18 | 12,51 | 333 | 111,9 | 4,1 | 19,5 |
| 400 320 19 | 13,60 | 362 | 102,9 | 4,1 | 19,5 |
| 400 320 20 | 14,86 | 395 | 94,2 | 4,1 | 19,5 |
| 400 320 21 | 16,25 | 232 | 86,1 | 2,2 | 19,5 |
| 400 320 22 | 17,28 | 246 | 81,0 | 2,2 | 19,5 |
| 400 320 23 | 18,40 | 262 | 76,1 | 2,2 | 19,5 |
| 400 320 24 | 19,63 | 280 | 71,3 | 2,2 | 19,5 |
| 400 320 25 | 20,99 | 299 | 66,7 | 2,2 | 19,5 |
| 400 320 26 | 22,50 | 321 | 62,2 | 2,2 | 19,5 |
| 400 320 27 | 24,19 | 345 | 57,9 | 2,2 | 19,5 |
| 400 320 28 | 26,09 | 372 | 53,7 | 2,2 | 19,5 |
| 400 320 29 | 28,25 | 400 | 49,6 | 2,2 | 19,5 |
| 400 320 30 | 30,71 | 400 | 45,6 | 2,0 | 19,5 |
| 400 320 31 | 33,55 | 400 | 41,7 | 1,8 | 19,5 |
| 400 320 32 | 34,10 | 324 | 41,0 | 1,5 | 19,5 |
| 400 320 33 | 36,67 | 348 | 38,2 | 1,5 | 19,5 |
| 400 320 34 | 39,55 | 376 | 35,4 | 1,5 | 19,5 |
| 400 320 35 | 42,81 | 400 | 32,7 | 1,4 | 19,5 |
| 400 320 36 | 46,55 | 400 | 30,1 | 1,3 | 19,5 |
| 400 320 37 | 50,85 | 400 | 27,5 | 1,2 | 19,5 |

## Size 3, Version A

| Product No. | Ratio i | $M_{2max}$ Nm | at $n_1$ = 1420 $min^{-1}$ and $f_B$ = 1 $n_2$ $min^{-1}$ | $P_{max}$ kW | Weight kg |
|---|---|---|---|---|---|
| 400 340 01 | 4,13 | 510 | 344,1 | 19,3 | 36 |
| 400 340 02 | 4,46 | 551 | 318,4 | 19,3 | 36 |
| 400 340 03 | 4,84 | 597 | 293,6 | 19,3 | 36 |
| 400 340 04 | 5,27 | 650 | 269,6 | 19,3 | 36 |
| 400 340 05 | 5,76 | 712 | 246,4 | 19,3 | 36 |
| 400 340 06 | 6,34 | 783 | 223,9 | 19,3 | 36 |
| 400 340 07 | 6,84 | 492 | 207,5 | 11,3 | 36 |
| 400 340 08 | 7,40 | 531 | 192,0 | 11,2 | 36 |
| 400 340 09 | 8,02 | 576 | 177,0 | 11,2 | 36 |
| 400 340 10 | 8,73 | 627 | 162,6 | 11,2 | 36 |
| 400 340 11 | 9,56 | 686 | 148,6 | 11,2 | 36 |
| 400 340 12 | 10,52 | 755 | 135,0 | 11,2 | 36 |
| 400 340 13 | 10,81 | 561 | 131,3 | 8,1 | 36 |
| 400 340 14 | 11,68 | 606 | 121,5 | 8,1 | 36 |
| 400 340 15 | 12,67 | 657 | 112,1 | 8,1 | 36 |
| 400 340 16 | 13,80 | 716 | 102,9 | 8,1 | 36 |
| 400 340 17 | 15,10 | 783 | 94,1 | 8,1 | 36 |
| 400 340 18 | 16,62 | 862 | 85,5 | 8,1 | 36 |
| 400 340 19 | 18,53 | 900 | 76,6 | 7,6 | 36 |
| 400 340 20 | 19,96 | 900 | 71,2 | 7,1 | 36 |
| 400 340 21 | 21,56 | 900 | 65,9 | 6,5 | 36 |
| 400 340 22 | 23,38 | 900 | 60,7 | 6,0 | 36 |
| 400 340 23 | 25,46 | 900 | 55,8 | 5,5 | 36 |
| 400 340 24 | 27,87 | 900 | 51,0 | 5,1 | 36 |
| 400 340 25 | 30,00 | 900 | 47,3 | 4,7 | 36 |
| 400 340 26 | 32,53 | 900 | 43,6 | 4,3 | 36 |
| 400 340 27 | 35,43 | 900 | 40,1 | 4,0 | 36 |
| 400 340 28 | 38,77 | 900 | 36,6 | 3,6 | 36 |
| 400 340 29 | 42,67 | 900 | 33,3 | 3,3 | 36 |
| 400 340 30 | 47,01 | 900 | 30,2 | 3,0 | 36 |
| 400 340 31 | 51,73 | 900 | 27,4 | 2,7 | 36 |

Dimensions tables see page 665.

## Dimensions Table Shaft-Mounted Flat Gearboxes BOC/I

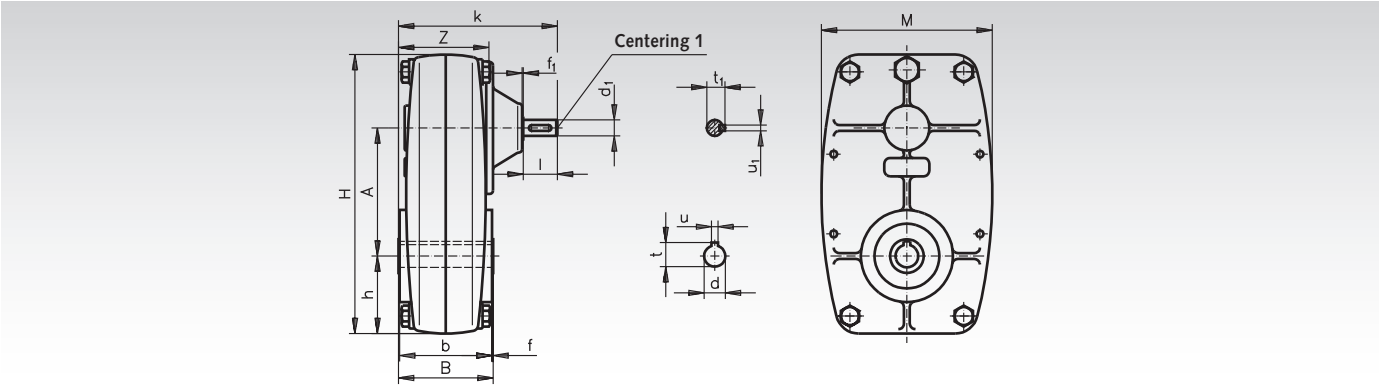


## Dimensions Version A

| Size | A mm | B mm | b mm | Ød mm | Ød1 mm | f mm | f1 mm | H mm | h mm | k mm | l mm | M mm | t mm | t1 mm | u mm | u1 mm | Z mm | Center. 1 DIN 332/2 |
|---|---|---|---|---|---|---|---|---|---|---|---|---|---|---|---|---|---|---|
| 0 | 112,5 | 83 | 81 | $20^{H7}$ | $14_{k6}$ | 1 | 1 | 245 | 68 | 139,5 | 30 | 150 | 22,8 | 16 | $6^{JS9}$ | 5 | 75,5 | M5 |
| 1 | 143 | 95 | 93 | $30^{H7}$ | $16_{k6}$ | 1 | 1 | 288 | 82 | 161,5 | 40 | 176 | 33,3 | 18 | $8^{JS9}$ | 5 | 81,5 | M5 |
| 2 | 150,5 | 105 | 103 | $35^{H7}$ | $22_{k6}$ | 1 | 2 | 330 | 90 | 206,5 | 50 | 190 | 38,3 | 24,5 | $10^{JS9}$ | 6 | 97,5 | M8 |
| 3 | 207 | 140 | 138 | $40^{H7}$ | $25_{k6}$ | 1 | 2 | 430 | 120 | 221,0 | 60 | 265 | 43,3 | 28 | $12^{JS9}$ | 8 | 125,0 | M10 |

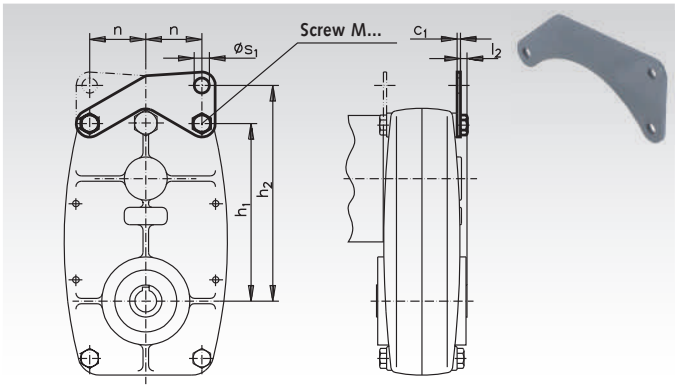


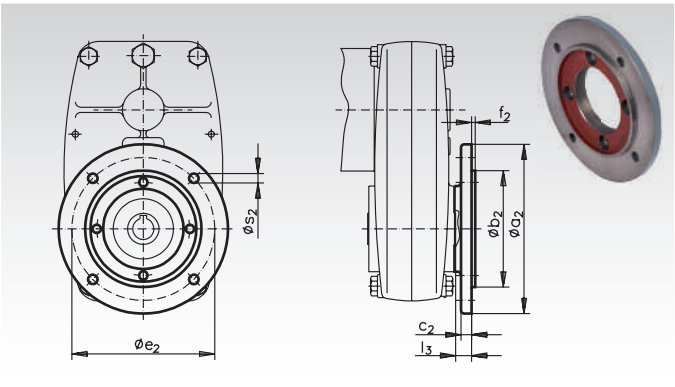


## Dimensions Version B

| Size | $c_1$ mm | $h_1$ mm | $h_2$ mm | $l_2$ mm | n mm | $Øs_1$ mm | Screw M |
|---|---|---|---|---|---|---|---|
| 0 | 3 | 163 | 198 | 12,5 | 51,5 | 6,6 | M6 |
| 1 | 3 | 187 | 230 | 12,5 | 58 | 9,0 | M8 |
| 2 | 4 | 220 | 260 | 7,5 | 65 | 14,0 | M10 |
| 3 | 5 | 277,5 | 347,5 | 21,0 | 92,5 | 14,0 | M12 |

## Dimensions Version C

| Size | $Øa_2$ mm | $Øb_2$ mm | $c_2$ mm | $Øe_2$ mm | $f_2$ mm | $l_3$ mm | $Øs_2$ mm |
|---|---|---|---|---|---|---|---|
| 0 | 160 200 | $110_{j6}$ $130_{j6}$ | 10 12 | 130 165 | 3,5 3,5 | 15 15 | 9 11 |
| 1 | 160 200 | $110_{j6}$ $130_{j6}$ | 16 12 | 130 165 | 3,5 3,5 | 22 22 | 9 11 |
| 2 | 160 200 | $110_{j6}$ $130_{j6}$ | 16 12 | 130 165 | 3,5 3,5 | 22 22 | 9 11 |
| 3 | 250 300 | $180_{j6}$ $230_{j6}$ | 16 20 | 215 265 | 4,0 4,0 | 21 21 | 14 14 |

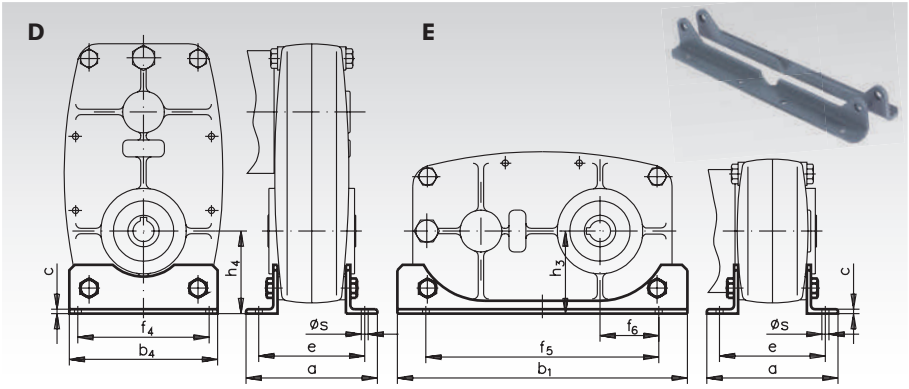


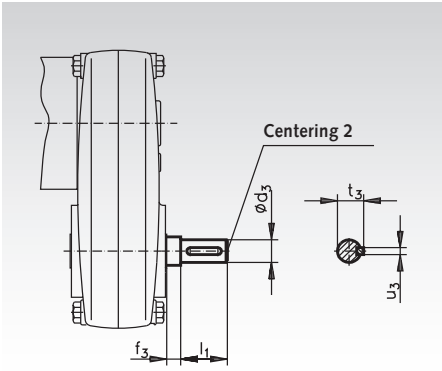


## Dimensions Version D and E

| Size | a mm | $b_1$ mm | $b_4$ mm | c mm | e mm | $f_4$ mm | $f_5$ mm | $f_6$ mm | $h_3$ mm | $h_4$ mm | Øs mm |
|---|---|---|---|---|---|---|---|---|---|---|---|
| 0 | 92 | 234 | 140 | 4 | 78 | 124 | 194 | 42,5 | 78 | 78 | 6,6 |
| 1 | 124 | 274 | 170 | 4 | 100 | 146 | 220 | 48 | 92 | 92 | 9 |
| 2 | 162 | 318 | 190 | 5 | 132 | 150 | 270 | 60 | 101 | 101 | 11 |
| 3 | 168 | 397 | 265 | 6 | 138 | 225 | 325 | 67,5 | 136,5 | 131,5 | 14 |

## Dimensions Version F

| Size | $Ød_3$ mm | $f_3$ mm | $l_1$ mm | $t_3$ mm | $u_3$ mm | Center. 2 DIN 332/2 |
|---|---|---|---|---|---|---|
| 0 | $20_{k6}$ | 12 | 40 | 22,5 | 6 | M6 |
| 1 | $30_{k6}$ | 15 | 70 | 33 | 8 | M10 |
| 2 | $35_{k6}$ | 14 | 80 | 38 | 10 | M12 |
| 3 | $40_{k6}$ | 16,5 | 80 | 43 | 12 | M16 |

## Bevel Gearboxes HUG, Ratio 1:1

**General:** Miniaturised right-angle drives for light duty. Suitable for manual and short term drive applications.

**Housing:** Gear cases are injection moulded in filled nylon 6.6 for low moisture take up, low thermal expansion, high rigidity. Electrical insulating. Shafts hardened and ground.

**Gearing:** straight teeth, max. backlash 2°. Speed max. 1,000min$^{-1}$.
**Version A:** with steel bevel gears, bonded onto the shafts.
**Version B:** with acteal bevel gears, moulded onto the shafts.

**Ordering details: e.g.: Type, Version, Product No.**

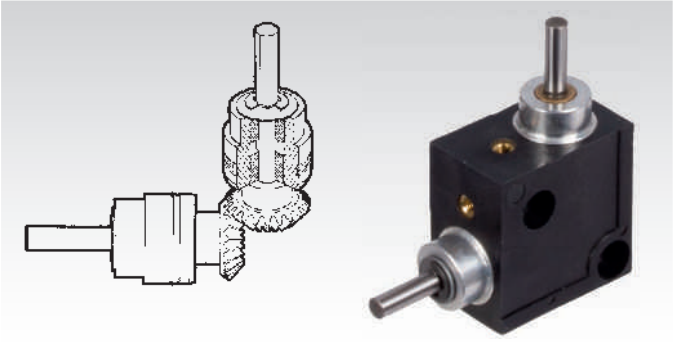

| Product No. | Version | $T_{max.}$ (Ncm) | Weight (g) |
|---|---|---|---|
| **410 000 00** | A (steel gears) | 68 | 41 |
| **410 001 00** | B (acetal gears) | 11 | 37 |

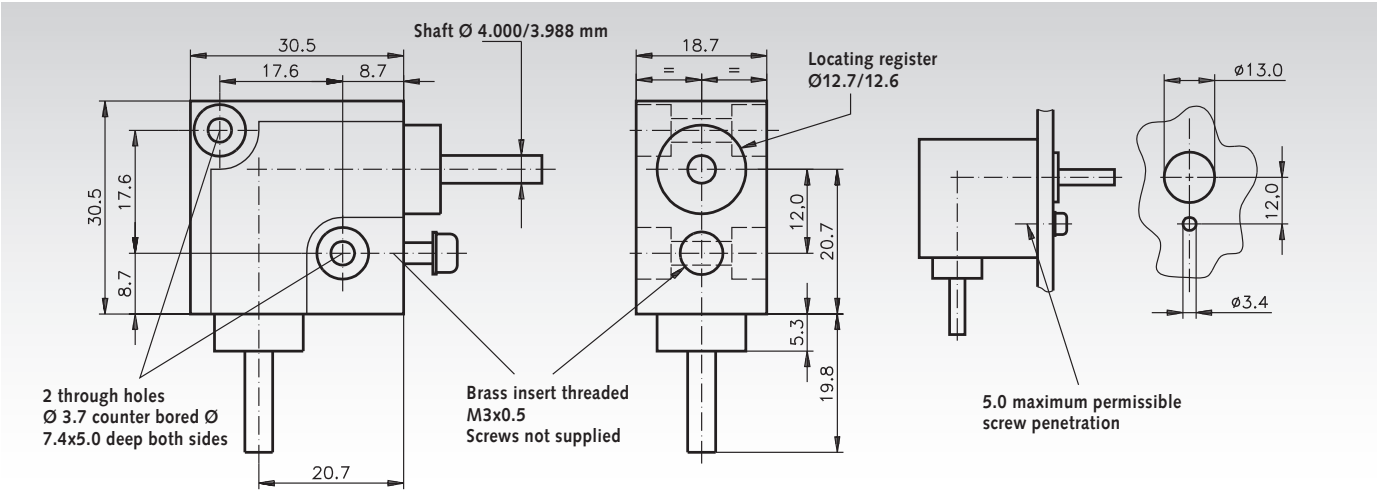


## Angular Drive with Acetal Bevel Gears, Ratio 1:1

**Material:** Housing made from zinc die-cast ZnAl4Cu1. Shafts made from stainless steel 1.4301, dismountable. Bevel gears from acetal resin, injection-moulded.

STAINLESS

- Low cost angular gear drive, ratio 1:1, 6 sizes.
- Suitable for lower torques and intermittend use.
- Shafts running directly in the self-lubricating housing material.
- Easy to mount and maintenance-free.

Shaft angle = 90°. Temperature range - 20°C to +100° C.

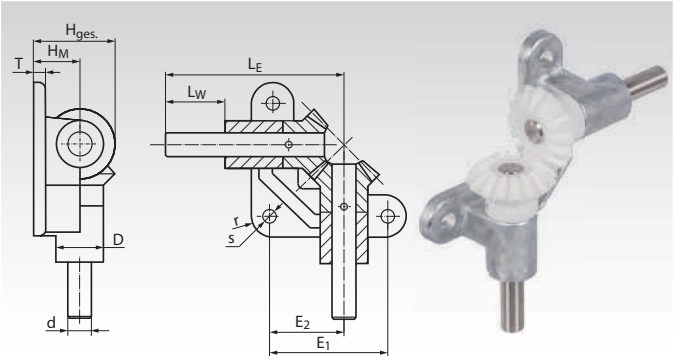


**Ordering details: e.g.:**
**Art.-Nr. 410 355 10, Angular drive with acetal bevel gears, shaft-Ø d=5mm**

| Product No. | $d^{h6}$ mm | D mm | $E_1$ mm | $E_2$ mm | $H_{Ges}$ mm | $H_M$ mm | $L_E$ mm | $L_W$ mm | r mm | s mm | T mm | Module mm | Number of teeth | $T_{max.}$ Ncm | Weight g |
|---|---|---|---|---|---|---|---|---|---|---|---|---|---|---|---|
| **410 355 10** | 5 | 12 | 32 | 19,4 | 18,8 | 10 | 50 | 15 | 6 | 4,8 | 4 | 1,0 | 16/16 | 8,3 | 60 |
| **410 355 15** | 8 | 18 | 45 | 28,4 | 28,2 | 15 | 70 | 20 | 9 | 5,8 | 5 | 1,5 | 16/16 | 29 | 180 |
| **410 355 20** | 10 | 22 | 55 | 35,0 | 37,5 | 20 | 90 | 30 | 11 | 7,0 | 6 | 2,0 | 16/16 | 73 | 320 |
| **410 355 25** | 12 | 25 | 65 | 41,0 | 46,8 | 25 | 105 | 35 | 12,5 | 9,0 | 7 | 2,5 | 16/16 | 145 | 480 |
| **410 355 30** | 15 | 30 | 75 | 47,5 | 56,2 | 30 | 120 | 40 | 15 | 9,0 | 8 | 3,0 | 16/16 | 250 | 760 |
| **410 355 35** | 18 | 33 | 85 | 54,0 | 65,7 | 35 | 135 | 45 | 16 | 11,0 | 9 | 3,5 | 16/16 | 440 | 1080 |

## Bevel Gearboxes KEK

Angular drives with high torques at very low dimensions.
Suitable in a wide variety of applications
7 Sizes. Ratio 1:1.

**Housing:** Aluminium, silver anodized. Sealed against lubricant leaks, protected against dust. Can be mounted in any position.
**Gearing:** Bevel gears from steel, surface hardened.
**Bearing:** Ball bearings with rubber seal RS.
**Lubrication:** Maintenance free grease lubrication.
**Angular backlash:** 3°+/-1°.
**Operating time:** 20% at 5 min.
**Life time:** 1,000 hours at max. performance at speed 500 $min^{-1}$ and operating time 20%.
**Permiss. operating temperature:** -20° to +60°C.

**Ordering Details: e.g.: Product No. 410 001 01 Bevel Gearbox KEK Size 1**

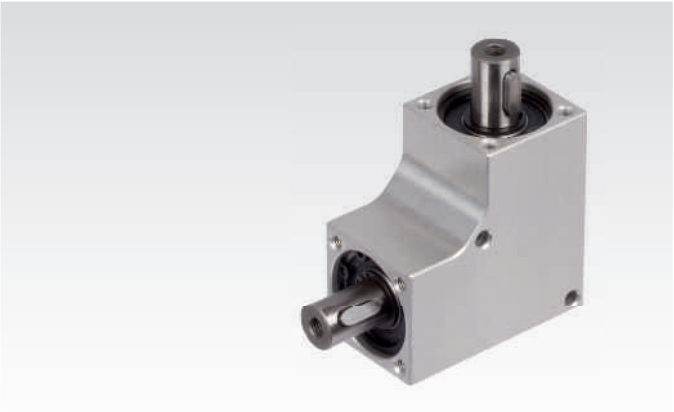

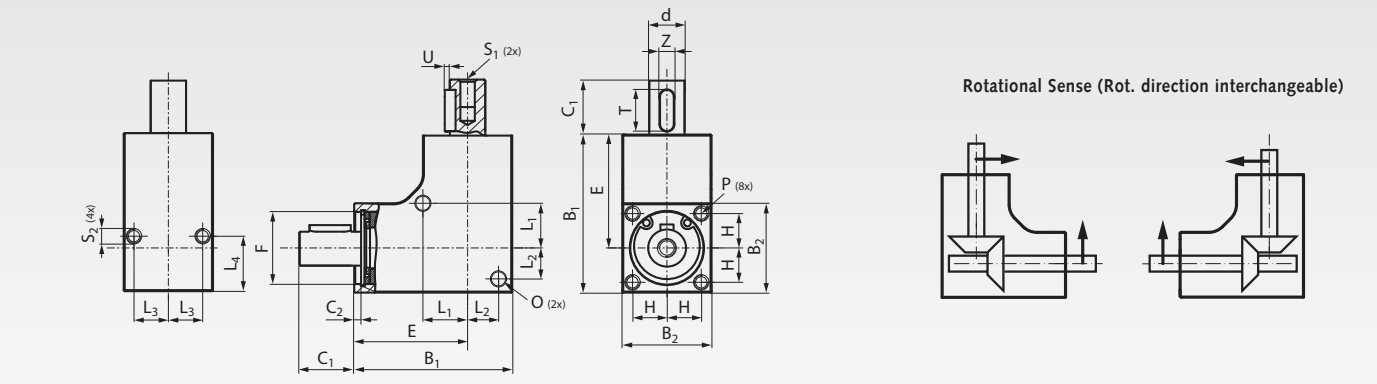


## Performance Data

| Product No. | Size | Shafts Ø d j6 mm | Ratio i | Permittable Torque at Speed 100 $min^{-1}$ Nm | 500 $min^{-1}$ Nm | 1.000 $min^{-1}$ Nm | Permittable Power at Speed 100 $min^{-1}$ W | 500 $min^{-1}$ W | 1.000 $min^{-1}$ W | Shaft Load $F_R$* N | $F_A$** N | Weight g |
|---|---|---|---|---|---|---|---|---|---|---|---|---|
| **410 001 01** | 1 | 6 | 1 : 1 | 0,35 | 0,1 | 0,05 | 3,7 | 5,2 | 5,2 | 60 | 60 | 52 |
| **410 001 02** | 2 | 8 | 1 : 1 | 0,75 | 0,3 | 0,15 | 7,9 | 15,7 | 15,7 | 100 | 100 | 73 |
| **410 001 03** | 3 | 10 | 1 : 1 | 2,5 | 1 | 0,50 | 26,2 | 52,4 | 52,4 | 120 | 120 | 142 |
| **410 001 04** | 4 | 12 | 1 : 1 | 4 | 1,5 | 0,75 | 41,9 | 78,5 | 78,5 | 140 | 140 | 189 |
| **410 001 05** | 5 | 12 | 1 : 1 | 5 | 2 | 1,0 | 52 | 105 | 105 | 240 | 240 | 268 |
| **410 001 06** | 6 | 12 | 1 : 1 | 8 | 3 | 1,5 | 84 | 157 | 157 | 550 | 550 | 330 |
| **410 001 07** | 7 | 12 | 1 : 1 | 10 | 4 | 2,0 | 105 | 209 | 209 | 550 | 550 | 395 |

* Radial load $F_R$ max. (on middle of the Output Shaft) for $F_A = 0$.
** Axial load $F_A$ max. for $F_R = 0$.

## Dimensiones

| Size | $B_1$ mm | $B_2$ mm | $C_1$ mm | $C_2$ mm | d j6 mm | E mm | F mm | H mm | $L_1$ mm | $L_2$ mm | $L_3$ mm | $L_4$ mm | O mm | P mm | $S_1$ mm | $S_2$ mm | T mm | U mm | Z mm |
|---|---|---|---|---|---|---|---|---|---|---|---|---|---|---|---|---|---|---|---|
| **1** | 32 | 18 | 12 | 2,1 | 6 | 23 | 13 | 6,5 | 8,5 | 6 | 6,5 | 11 | 3,1 | M3 x 10 | M3 x 8 | M3 x 6 | 8 | 0,8 | 2 |
| **2** | 35 | 20 | 12 | 2,05 | 8 | 25 | 16 | 7,5 | 10 | 7 | 7,5 | 10 | 3,1 | M3 x 10 | M3 x 8 | M3 x 6 | 8 | 0,8 | 2 |
| **3** | 42 | 24 | 16 | 2,0 | 10 | 30 | 19 | 9 | 12 | 8 | 9 | 16 | 4,1 | M4 x 10 | M4 x 8 | M4 x 8 | 12 | 1,5 | 4 |
| **4** | 46 | 26 | 16 | 2,0 | 12 | 33 | 21 | 10 | 13 | 9 | 10 | 16 | 4,1 | M4 x 10 | M5 x 8 | M4 x 8 | 12 | 1,5 | 4 |
| **5** | 53 | 30 | 16 | 2,1 | 12 | 38 | 24 | 11 | 15 | 11 | 11 | 16 | 4,1 | M4 x 10 | M5 x 8 | M4 x 8 | 12 | 1,5 | 4 |
| **6** | 56 | 32 | 16 | 2,1 | 12 | 40 | 28 | 12 | 17 | 12 | 12 | 16 | 4,1 | M4 x 10 | M5 x 8 | M4 x 8 | 12 | 1,5 | 4 |
| **7** | 60 | 35 | 16 | 2,1 | 12 | 42,5 | 30 | 13 | 17,5 | 13,5 | 13 | 16 | 4,1 | M4 x 10 | M5 x 8 | M4 x 8 | 12 | 1,5 | 4 |

## Bevel Gearboxes DZA

**General data:** 4 sizes and 2 versions.
Ratio either 1 : 1 or 2 : 1. Any mounting position possible.
Ratio for gearing up to max. 750 min$^{-1}$ possible.

**Housing:** Thick-walled, one-piece cast aluminium housing, fully oil-tight and dust-proof.

**Gearing:** The gears are to the Coniflex system, case hardened.

**Shafts/bearing system:** Input and output shaft are ground and mounted on ball bearings. **From size 2 with keyways.**

**Lubrication/maintenance:** Lubricated for life, viscosity ISO VG 150. Gearboxes are maintenance free.

**Angular backlash:** 15 to 30 angular minutes.

**Permiss. operating temperature:** -18°C to +80°C.

**Ordering details: e.g.: Type, Size, Version, Ratio, Product No.**

| Product No. | Size | Version | Ratio i |
|---|---|---|---|
| 410 010 00 | 1 | A | 1 : 1 |
| 410 010 02 | 1 | A | 2 : 1 |
| 410 020 00 | 1 | B | 1 : 1 |
| 410 020 02 | 1 | B | 2 : 1 |
| 410 012 00 | 2 | A | 1 : 1 |
| 410 012 02 | 2 | A | 2 : 1 |
| 410 022 00 | 2 | B | 1 : 1 |
| 410 022 02 | 2 | B | 2 : 1 |
| 410 014 00 | 3 | A | 1 : 1 |
| 410 014 02 | 3 | A | 2 : 1 |
| 410 024 00 | 3 | B | 1 : 1 |
| 410 024 02 | 3 | B | 2 : 1 |
| 410 016 00 | 4 | A | 1 : 1 |
| 410 016 02 | 4 | A | 2 : 1 |
| 410 026 00 | 4 | B | 1 : 1 |
| 410 026 02 | 4 | B | 2 : 1 |

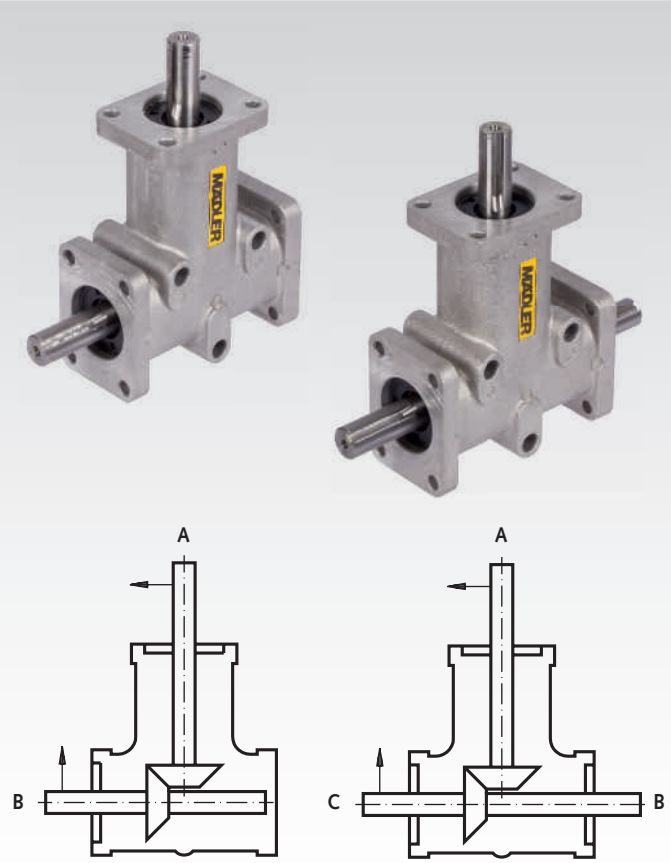


**Version A** **Version B**

## Performance Data

| | | Size 1 | | Size 2 | | Size 3 | | Size 4 | |
|---|---|---|---|---|---|---|---|---|---|
| Output Speed* min$^{-1}$ | Ratio i | Input Power kW | Output Torque** Nm | Input Power kW | Output Torque** Nm | Input Power kW | Output Torque** Nm | Input Power kW | Output Torque** Nm |
| 50 | 1 : 1 | 0,026 | 4,7 | 0,093 | 16,5 | 0,280 | 50,5 | 0,500 | 89,0 |
| 50 | 2 : 1 | 0,010 | 1,7 | 0,038 | 6,7 | 0,150 | 27,0 | 0,260 | 46,0 |
| 100 | 1 : 1 | 0,047 | 4,2 | 0,162 | 14,5 | 0,490 | 44,0 | 0,890 | 79,0 |
| 100 | 2 : 1 | 0,017 | 1,5 | 0,069 | 6,2 | 0,290 | 26,0 | 0,490 | 44,0 |
| 200 | 1 : 1 | 0,082 | 3,7 | 0,280 | 12,6 | 0,850 | 38,0 | 1,540 | 69,0 |
| 200 | 2 : 1 | 0,030 | 1,3 | 0,131 | 5,9 | 0,550 | 24,5 | 0,950 | 42,5 |
| 400 | 1 : 1 | 0,142 | 3,2 | 0,470 | 10,6 | 1,440 | 32,5 | 2,600 | 58,7 |
| 400 | 2 : 1 | 0,053 | 1,2 | 0,235 | 5,3 | 0,980 | 22,0 | 1,730 | 39,0 |
| 600 | 1 : 1 | 0,195 | 2,9 | 0,665 | 10,0 | 1,980 | 29,7 | 3,530 | 53,1 |
| 600 | 2 : 1 | 0,074 | 1,1 | 0,332 | 5,0 | 1,400 | 21,0 | 2,460 | 37,0 |
| 1000 | 1 : 1 | 0,287 | 2,6 | 1,014 | 9,2 | 3,000 | 27,1 | 5,100 | 46,3 |
| 1000 | 2 : 1 | 0,106 | 1,0 | 0,496 | 4,5 | 2,090 | 19,0 | 3,640 | 33,0 |
| 1400 | 1 : 1 | 0,368 | 2,4 | 1,320 | 8,6 | 3,870 | 25,2 | 6,460 | 42,1 |
| 1400 | 2 : 1 | 0,135 | 0,9 | 0,645 | 4,2 | 2,790 | 17,9 | 4,530 | 29,5 |
| 1800*** | 1 : 1 | 0,442 | 2,3 | 1,571 | 8,0 | 4,610 | 23,5 | 9,680 | 39,1 |
| 2000*** | 1 : 1 | 0,476 | 2,2 | 1,723 | 7,9 | 4,980 | 22,8 | 8,270 | 37,9 |
| 2500*** | 1 : 1 | 0,556 | 2,1 | 2,105 | 7,8 | 5,750 | 21,3 | 9,530 | 35,3 |
| 3000*** | 1 : 1 | 0,632 | 2,0 | 2,494 | 7,7 | 6,540 | 20,2 | 10,780 | 33,3 |

* The gearboxes are thus dimensioned, that the lifetime comes to 10,000 hours at full load and a starting speed of 1,400 min$^{-1}$.

** Only for version A. At version B, the torque at each output shaft end may be only 50%.

*** Speeds above 1,400 min$^{-1}$ shorten the lifespan and are only permitted for a short time. If the permiss. operating temperature is exceeded, oil leaks may occur.

## Input shaft / output shaft, speed

At both types and both ratios, the input can be at shaft A as well as at shaft B/C.
At ratio 1:1 the maximum speed is 1,400 min$^{-1}$.
Ratio 2:1 can be used for gearing down and also for gearing up.
Gearing down: Input at shaft A with max. speed 1,400 min$^{-1}$ (output speed max. 700 min$^{-1}$).
Gearing up: Input at shaft B/C with max. speed 750 min$^{-1}$ (output speed max. 1,500 min$^{-1}$).

## Dimensions Table Bevel Gearboxes DZA

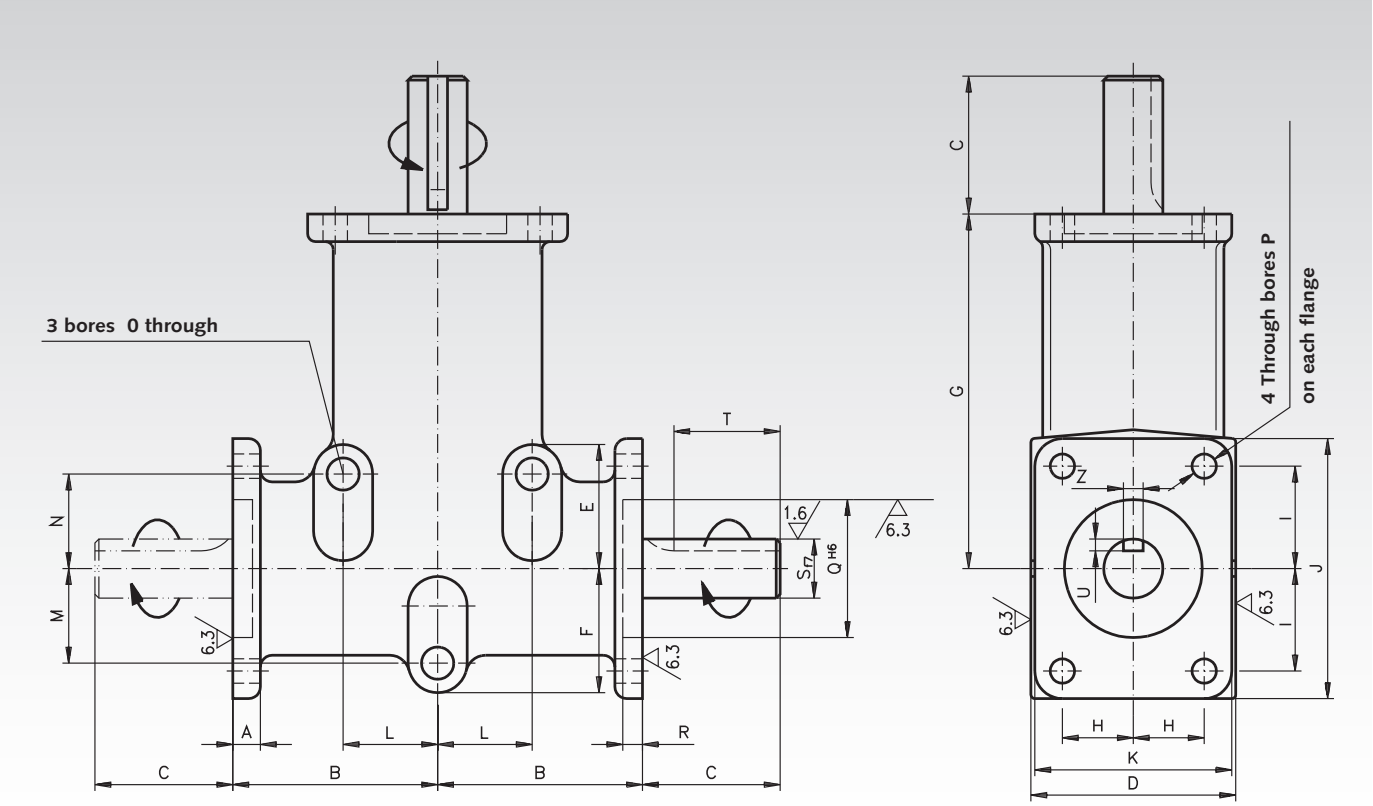


| Size | Shaft-Ø mm | No. of Output-Shafts | Ratio | A | B | C | D | E | F | G | H | I | J | K | L | M | N | O | P | Q | R | S | T* | U | Z | Weight kg |
|---|---|---|---|---|---|---|---|---|---|---|---|---|---|---|---|---|---|---|---|---|---|---|---|---|---|---|
| | | | | Dim. in mm | | | | | | | | | | | | | | | | | | | | | | |
| 1 | 8 | 1 | 1 : 1 | 6 | 34 | 15 | 34 | 21 | 21 | 60 | 11 | 15 | 40 | 32 | 16 | 16 | 16 | 5,2 | 4,2 | 22 | 2 | 8 | - | - | - | 0,30 |
| 1 | 8 | 2 | 1 : 1 | 6 | 34 | 15 | 34 | 21 | 21 | 60 | 11 | 15 | 40 | 32 | 16 | 16 | 16 | 5,2 | 4,2 | 22 | 2 | 8 | - | - | - | 0,31 |
| 1 | 8 | 1 | 2 : 1 | 6 | 34 | 15 | 34 | 21 | 21 | 60 | 11 | 15 | 40 | 32 | 16 | 16 | 16 | 5,2 | 4,2 | 22 | 2 | 8 | - | - | - | 0,30 |
| 1 | 8 | 2 | 2 : 1 | 6 | 34 | 15 | 34 | 21 | 21 | 60 | 11 | 15 | 40 | 32 | 16 | 16 | 16 | 5,2 | 4,2 | 22 | 2 | 8 | - | - | - | 0,31 |
| 2 | 15 | 1 | 1 : 1 | 10 | 52 | 35 | 52 | 31,5 | 31,5 | 90 | 18 | 26 | 66 | 50 | 24 | 24 | 24 | 8,2 | 6,2 | 35 | 3 | 15 | 27 | 3 | 5 | 1,25 |
| 2 | 15 | 2 | 1 : 1 | 10 | 52 | 35 | 52 | 31,5 | 31,5 | 90 | 18 | 26 | 66 | 50 | 24 | 24 | 24 | 8,2 | 6,2 | 35 | 3 | 15 | 27 | 3 | 5 | 1,31 |
| 2 | 15 | 1 | 2 : 1 | 10 | 52 | 35 | 52 | 31,5 | 31,5 | 90 | 18 | 26 | 66 | 50 | 24 | 24 | 24 | 8,2 | 6,2 | 35 | 3 | 15 | 27 | 3 | 5 | 1,25 |
| 2 | 15 | 2 | 2 : 1 | 10 | 52 | 35 | 52 | 31,5 | 31,5 | 90 | 18 | 26 | 66 | 50 | 24 | 24 | 24 | 8,2 | 6,2 | 35 | 3 | 15 | 27 | 3 | 5 | 1,31 |
| 3 | 20 | 1 | 1 : 1 | 8,5 | 75 | 50 | 76 | 47 | 47 | 140 | 27 | 38 | 97 | 74 | 38 | 38 | 38 | 9,0 | 8,5 | 52 | 2,5 | 20 | 40 | 3,5 | 6 | 3,75 |
| 3 | 20 | 2 | 1 : 1 | 8,5 | 75 | 50 | 76 | 47 | 47 | 140 | 27 | 38 | 97 | 74 | 38 | 38 | 38 | 9,0 | 8,5 | 52 | 2,5 | 20 | 40 | 3,5 | 6 | 3,89 |
| 3 | 20 | 1 | 2 : 1 | 8,5 | 75 | 50 | 76 | 47 | 47 | 140 | 27 | 38 | 97 | 74 | 38 | 38 | 38 | 9,0 | 8,5 | 52 | 2,5 | 20 | 40 | 3,5 | 6 | 3,75 |
| 3 | 20 | 2 | 2 : 1 | 8,5 | 75 | 50 | 76 | 47 | 47 | 140 | 27 | 38 | 97 | 74 | 38 | 38 | 38 | 9,0 | 8,5 | 52 | 2,5 | 20 | 40 | 3,5 | 6 | 3,89 |
| 4 | 25 | 1 | 1 : 1 | 13 | 80 | 70 | 100 | 81 | 57,5 | 150 | 38 | 38 | 99 | 98 | 45 | 45 | 70 | 10,3 | 10,3 | 62 | 3,5 | 25 | 60 | 4 | 8 | 6,20 |
| 4 | 25 | 2 | 1 : 1 | 13 | 80 | 70 | 100 | 81 | 57,5 | 150 | 38 | 38 | 99 | 98 | 45 | 45 | 70 | 10,3 | 10,3 | 62 | 3,5 | 25 | 60 | 4 | 8 | 6,52 |
| 4 | 25 | 1 | 2 : 1 | 13 | 80 | 70 | 100 | 81 | 57,5 | 150 | 38 | 38 | 99 | 98 | 45 | 45 | 70 | 10,3 | 10,3 | 62 | 3,5 | 25 | 60 | 4 | 8 | 6,20 |
| 4 | 25 | 2 | 2 : 1 | 13 | 80 | 70 | 100 | 81 | 57,5 | 150 | 38 | 38 | 99 | 98 | 45 | 45 | 70 | 10,3 | 10,3 | 62 | 3,5 | 25 | 60 | 4 | 8 | 6,52 |

* Size 1 without feather key groove.

## Permissible Radial and Axial Loads

| Size | $F_R$** N | $F_A$*** N |
|---|---|---|
| 1 | 100 | 20 |
| 2 | 250 | 50 |
| 3 | 400 | 80 |
| 4 | 800 | 160 |

** Permiss. radial force for $F_A$=0.
*** Permiss. axial force for $F_R$=0.

| Size | 1 | 2 | 3 | 4 |
|---|---|---|---|---|
| Oil volume (in dm³) | 0.03 | 0.06 | 0.10 | 0.13 |

## Operating Factors

| Operating hours per day | 3 | 8 | 12 | 24 |
|---|---|---|---|---|
| Uniform load | 0,7 | 0,9 | 1 | 1,3 |
| Light shocks | 0,9 | 1 | 1,3 | 1,8 |
| Heavy shocks | 1,3 | 1,6 | 1,8 | 2,3 |

Operating temperature -18° to + 80°C.

## Bevel Gearboxes DZR, Stainless Steel

**General data:** High resistance to corrosion.
4 sizes and 2 versions.
Ratio either 1 : 1 or 2 : 1. Any mounting position possible.
Ratio for gearing up to max. 750 min$^{-1}$ possible.

**Housing:** Stainless steel 1.4401 (V4A / AISI 316). Thick-walled, one-piece housing, fully oil-tight and dust-proof.

**Gearing:** Gleason-spiral bevel gears, hardened.

**Shafts/bearing system:** Stainless steel 1.4401 (V4A / AISI 316), ground and mounted on ball bearings. **From size 2 with keyways.**

**Lubrication/maintenance:** Lubricated for life, viscosity ISO VG 150. Gearboxes are maintenance free.

**Angular backlash:** 15 to 30 angular minutes.

**Permiss. operating temperature:** -18°C to +80°C.

**Ordering details: e.g.: Type, Size, Version, Ratio, Product No.**

| Product No. | Size | Version | Ratio i |
|---|---|---|---|
| 410 910 00 | 1 | A | 1 : 1 |
| 410 910 02 | 1 | A | 2 : 1 |
| 410 920 00 | 1 | B | 1 : 1 |
| 410 920 02 | 1 | B | 2 : 1 |
| 410 912 00 | 2 | A | 1 : 1 |
| 410 912 02 | 2 | A | 2 : 1 |
| 410 922 00 | 2 | B | 1 : 1 |
| 410 922 02 | 2 | B | 2 : 1 |
| 410 914 00 | 3 | A | 1 : 1 |
| 410 914 02 | 3 | A | 2 : 1 |
| 410 924 00 | 3 | B | 1 : 1 |
| 410 924 02 | 3 | B | 2 : 1 |
| 410 916 00 | 4 | A | 1 : 1 |
| 410 916 02 | 4 | A | 2 : 1 |
| 410 926 00 | 4 | B | 1 : 1 |
| 410 926 02 | 4 | B | 2 : 1 |

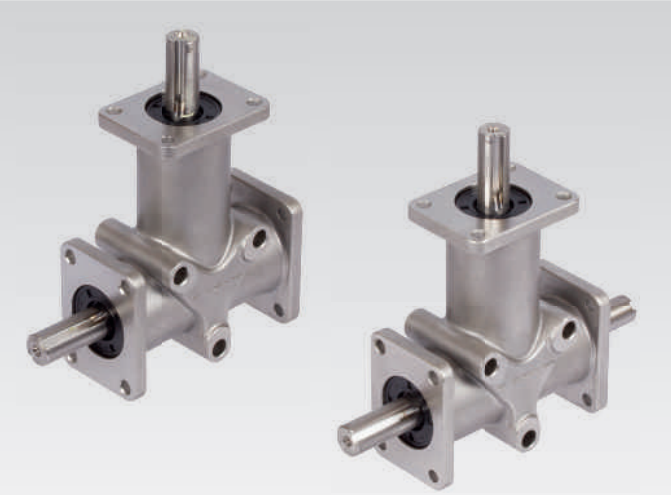

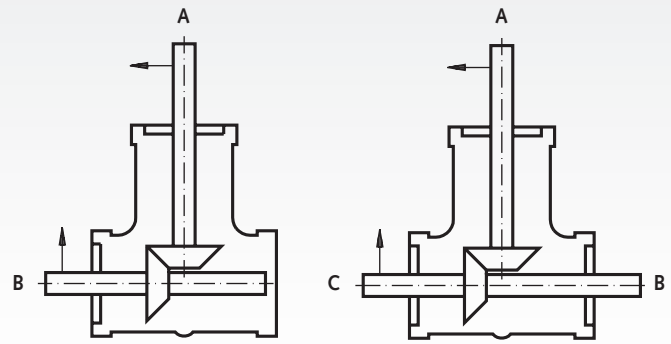


**Version A** **Version B**

## Performance Data

| Output Speed* min$^{-1}$ | Ratio i | Size 1 Input Power kW | Size 1 Output Torque** Nm | Size 2 Input Power kW | Size 2 Output Torque** Nm | Size 3 Input Power kW | Size 3 Output Torque** Nm | Size 4 Input Power kW | Size 4 Output Torque** Nm |
|---|---|---|---|---|---|---|---|---|---|
| 50 | 1 : 1 | 0,012 | 2,2 | 0,038 | 7,2 | 0,11 | 21,0 | 0,220 | 42,0 |
| 50 | 2 : 1 | 0,008 | 1,6 | 0,030 | 5,7 | 0,099 | 19,0 | 0,204 | 39,0 |
| 100 | 1 : 1 | 0,021 | 2,0 | 0,070 | 6,7 | 0,215 | 20,5 | 0,419 | 40,0 |
| 100 | 2 : 1 | 0,016 | 1,5 | 0,058 | 5,5 | 0,188 | 18,0 | 0,387 | 37,0 |
| 200 | 1 : 1 | 0,037 | 1,75 | 0,136 | 6,5 | 0,419 | 20,0 | 0,796 | 38,0 |
| 200 | 2 : 1 | 0,031 | 1,5 | 0,105 | 5,0 | 0,356 | 17,0 | 0,733 | 35,0 |
| 400 | 1 : 1 | 0,073 | 1,75 | 0,272 | 6,5 | 0,817 | 19,5 | 1,508 | 36,0 |
| 400 | 2 : 1 | 0,059 | 1,4 | 0,209 | 5,0 | 0,670 | 16,0 | 1,382 | 33,0 |
| 700 | 1 : 1 | 0,125 | 1,7 | 0,440 | 6,0 | 1,393 | 19,0 | 2,492 | 34,0 |
| 700 | 2 : 1 | 0,103 | 1,4 | 0,348 | 4,75 | 1,026 | 14,0 | 2,126 | 29,0 |
| 1400 | 1 : 1 | 0,235 | 1,6 | 0,880 | 6,0 | 2,785 | 19,0 | 4,545 | 31,0 |
| 1400 | 2 : 1 | 0,161 | 1,1 | 0,586 | 4,0 | 1,759 | 12,0 | 3,372 | 23,0 |
| 2000*** | 1 : 1 | 0,272 | 1,3 | 0,942 | 4,5 | 3,351 | 16,0 | 5,236 | 25,0 |
| 3000*** | 1 : 1 | 0,346 | 1,1 | 1,257 | 4,02 | 4,398 | 14,0 | 6,911 | 22,0 |

* The gearboxes are thus dimensioned, that the lifetime comes to 10,000 hours at full load and a starting speed of 1,400 min$^{-1}$.

** Only for version A. At version B, the torque at each output shaft end may be only 50%.

*** Speeds above 1,400 min$^{-1}$ shorten the lifespan and are only permitted for a short time. If the permiss. operating temperature is exceeded, oil leaks may occur.

## Input shaft / output shaft, speed

At both types and both ratios, the input can be at shaft A as well as at shaft B/C.
At ratio 1:1 the maximum speed is 1,400 min$^{-1}$.
Ratio 2:1 can be used for gearing down and also for gearing up.
Gearing down: Input at shaft A with max. speed 1,400 min$^{-1}$ (output speed max. 700 min$^{-1}$).
Gearing up: Input at shaft B/C with max. speed 750 min$^{-1}$ (output speed max. 1,500 min$^{-1}$).

## Dimensions Table Bevel Gearboxes DZR, Stainless Steel

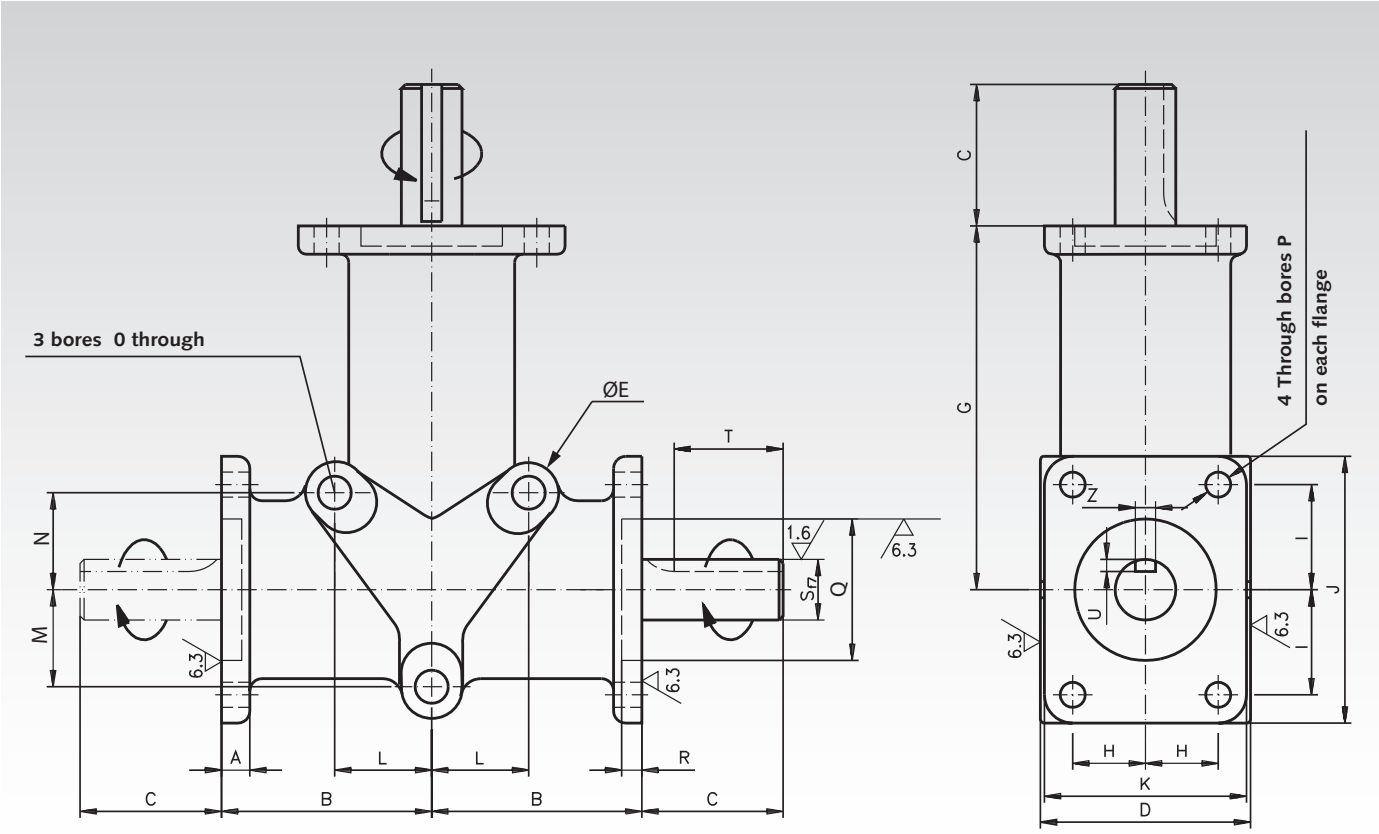


| Size | Shaft-Ø mm | No. of Output-Shafts | Ratio | A | B | C | D | E | G | H | I | J | K | L | M | N | O | P | $Q^{H7}$ | R | $S^{f7}$ | T* | U | Z | Weight kg |
|---|---|---|---|---|---|---|---|---|---|---|---|---|---|---|---|---|---|---|---|---|---|---|---|---|---|
| | | | | Dim. in mm | | | | | | | | | | | | | | | | | | | | | |
| 1 | 8 | 1 | 1 : 1 | 5 | 34 | 15 | 33 | 11 | 60 | 11 | 15 | 42,4 | 32 | 16 | 16 | 16 | 5,2 | 4,2 | 22 | 1,3 | 8 | - | - | - | 0,483 |
| 1 | 8 | 2 | 1 : 1 | 5 | 34 | 15 | 33 | 11 | 60 | 11 | 15 | 42,4 | 32 | 16 | 16 | 16 | 5,2 | 4,2 | 22 | 1,3 | 8 | - | - | - | 0,492 |
| 1 | 8 | 1 | 2 : 1 | 5 | 34 | 15 | 33 | 11 | 60 | 11 | 15 | 42,4 | 32 | 16 | 16 | 16 | 5,2 | 4,2 | 22 | 1,3 | 8 | - | - | - | 0,483 |
| 1 | 8 | 2 | 2 : 1 | 5 | 34 | 15 | 33 | 11 | 60 | 11 | 15 | 42,4 | 32 | 16 | 16 | 16 | 5,2 | 4,2 | 22 | 1,3 | 8 | - | - | - | 0,492 |
| 2 | 15 | 1 | 1 : 1 | 7 | 52 | 35 | 52 | 17 | 90 | 18 | 26 | 65 | 50 | 24 | 24 | 24 | 8,5 | 6,2 | 35 | 2,0 | 15 | 27 | 3 | 5 | 1,795 |
| 2 | 15 | 2 | 1 : 1 | 7 | 52 | 35 | 52 | 17 | 90 | 18 | 26 | 65 | 50 | 24 | 24 | 24 | 8,5 | 6,2 | 35 | 2,0 | 15 | 27 | 3 | 5 | 1,855 |
| 2 | 15 | 1 | 2 : 1 | 7 | 52 | 35 | 52 | 17 | 90 | 18 | 26 | 65 | 50 | 24 | 24 | 24 | 8,5 | 6,2 | 35 | 2,0 | 15 | 27 | 3 | 5 | 1,795 |
| 2 | 15 | 2 | 2 : 1 | 7 | 52 | 35 | 52 | 17 | 90 | 18 | 26 | 65 | 50 | 24 | 24 | 24 | 8,5 | 6,2 | 35 | 2,0 | 15 | 27 | 3 | 5 | 1,855 |
| 3 | 20 | 1 | 1 : 1 | 9 | 75 | 50 | 76 | 18 | 140 | 27 | 38 | 94 | 74 | 38 | 38 | 38 | 9,0 | 8,5 | 52 | 2,0 | 20 | 40 | 3,5 | 6 | 5,388 |
| 3 | 20 | 2 | 1 : 1 | 9 | 75 | 50 | 76 | 18 | 140 | 27 | 38 | 94 | 74 | 38 | 38 | 38 | 9,0 | 8,5 | 52 | 2,0 | 20 | 40 | 3,5 | 6 | 5,536 |
| 3 | 20 | 1 | 2 : 1 | 9 | 75 | 50 | 76 | 18 | 140 | 27 | 38 | 94 | 74 | 38 | 38 | 38 | 9,0 | 8,5 | 52 | 2,0 | 20 | 40 | 3,5 | 6 | 5,538 |
| 3 | 20 | 2 | 2 : 1 | 9 | 75 | 50 | 76 | 18 | 140 | 27 | 38 | 94 | 74 | 38 | 38 | 38 | 9,0 | 8,5 | 52 | 2,0 | 20 | 40 | 3,5 | 6 | 5,536 |
| 4 | 25 | 1 | 1 : 1 | 11 | 80 | 70 | 100 | 25 | 150 | 38 | 38 | 101 | 98 | 45 | 45 | 70 | 12,5 | 10,3 | 62 | 3,0 | 25 | 60 | 4 | 8 | 9,136 |
| 4 | 25 | 2 | 1 : 1 | 11 | 80 | 70 | 100 | 25 | 150 | 38 | 38 | 101 | 98 | 45 | 45 | 70 | 12,5 | 10,3 | 62 | 3,0 | 25 | 60 | 4 | 8 | 9,445 |
| 4 | 25 | 1 | 2 : 1 | 11 | 80 | 70 | 100 | 25 | 150 | 38 | 38 | 101 | 98 | 45 | 45 | 70 | 12,5 | 10,3 | 62 | 3,0 | 25 | 60 | 4 | 8 | 9,136 |
| 4 | 25 | 2 | 2 : 1 | 11 | 80 | 70 | 100 | 25 | 150 | 38 | 38 | 101 | 98 | 45 | 45 | 70 | 12,5 | 10,3 | 62 | 3,0 | 25 | 60 | 4 | 8 | 9,445 |

* Size 1 without feather key groove.

## Permissible Radial and Axial Loads

| Size | $F_R$** N | $F_A$*** N |
|---|---|---|
| 1 | 60 | 20 |
| 2 | 140 | 50 |
| 3 | 300 | 80 |
| 4 | 400 | 160 |

** Permiss. radial force for $F_A$=0.
*** Permiss. axial force for $F_R$=0.

| Size | 1 | 2 | 3 | 4 |
|---|---|---|---|---|
| Oil volume (in dm³) | 0.03 | 0.06 | 0.10 | 0.13 |

## Operating Factors

| Operating hours per day | 3 | 8 | 12 | 24 |
|---|---|---|---|---|
| Uniform load | 0,7 | 0,9 | 1 | 1,3 |
| Light shocks | 0,9 | 1 | 1,3 | 1,8 |
| Heavy shocks | 1,3 | 1,6 | 1,8 | 2,3 |

Operating temperature -18° to + 80°C.

## Bevel Gearboxes DZA Model H

**General data:** Gearbox with hollow shaft on the output side. 2 sizes. Ratio either 1 : 1 or 2 : 1 or 3 : 1. Any mounting position possible. The maximum input speed (hollow shaft as input device) for gearing up is 750 $min^{-1}$ at 2 : 1 and 500 $min^{-1}$ at 3 : 1.

**Housing:** Thick-walled, one-piece cast aluminium housing, fully oil-tight and dust-proof.

**Gearing:** The gears are to the Coniflex system, case hardened.

**Shafts/bearing system:** Input and output shaft are ground and mounted on ball bearings.

**Lubrication/maintenance:** Lubricated for life, viscosity ISO VG 150. Gearboxes are maintenance free.

**Angular backlash:** 15 to 30 angular minutes.

**Permiss. operating temperature:** -18°C to +80°C.

Size 2 Size 3

Rotational direction depends on mounting position:

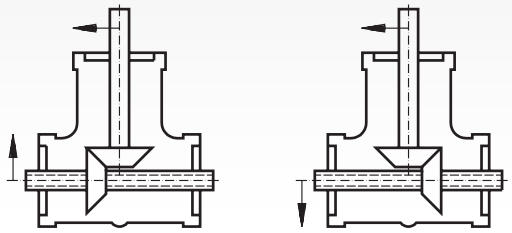

**Ordering details: e.g.: Product No., Type, Size, Version, Ratio**

| Product No. | Size | Ratio i | Input Power* kW | Output Torque* Nm | Oil Volume $dm^3$ | Weight kg |
|---|---|---|---|---|---|---|
| 410 132 00 | 2 | 1:1 | 1,83 | 13 | 0,075 | 2,0 |
| 410 132 02 | 2 | 2:1 | 0,5 | 7 | 0,075 | 2,0 |
| 410 132 03 | 2 | 3:1 | 0,25 | 5 | 0,075 | 2,0 |
| 410 134 00 | 3 | 1:1 | 5,5 | 38 | 0,12 | 4,8 |
| 410 134 02 | 3 | 2:1 | 1,83 | 25 | 0,12 | 4,8 |
| 410 134 03 | 3 | 3:1 | 0,91 | 18 | 0,12 | 4,8 |

*Permiss. max. values for input speed 1,400 $min^{-1}$ (at the solid shaft) at continuous operation.

### Dimensions Size 2

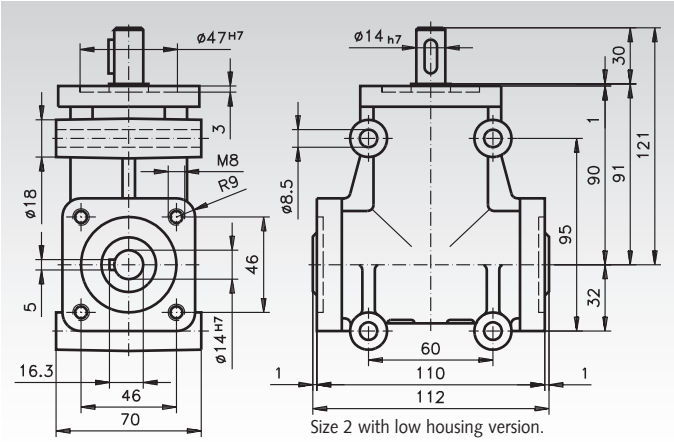


Size 2 with low housing version.
The dimensions and fastening threads M8 are the same on all three flanges.

### Dimensions Size 3

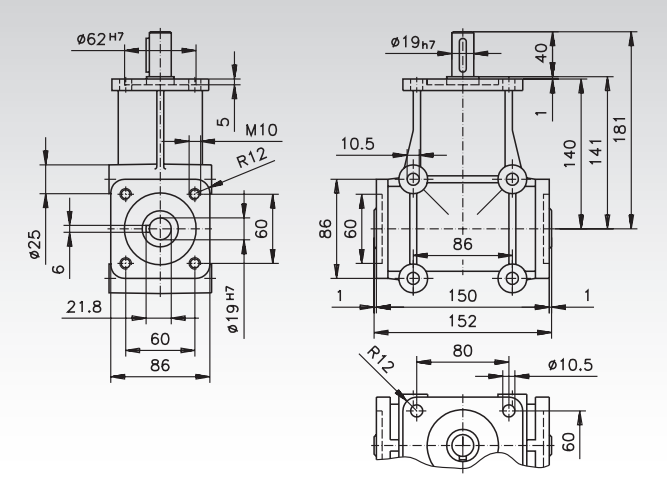


### Permissible Radial and Axial Loads

| Size | $F_R$** N | $F_A$*** N |
|---|---|---|
| 2 | 250 | 50 |
| 3 | 400 | 80 |

** Permiss. radial force at $F_A$=0.
*** Permiss. axial force at $F_R$=0.

### Operating Factors

| Operating hours per day | 3 | 8 | 12 | 24 |
|---|---|---|---|---|
| Uniform load | 0,8 | 0,9 | 1 | 1,25 |
| Light shocks | 0,9 | 1 | 1,25 | 1,5 |
| Strong shocks | 1,0 | 1,5 | 1,6 | 1,8 |

## Bevel Gearboxes KU/I (Rigid Design)

**General data:** 3 Designs, 6 standard version, and many further variations available as multi-shaft gearboxes, please enquire. **Also Available in corrosion-proof and NO-TOX version for the food processing and pharmaceutic industry.**

**Housing:** Thick-walled grey cast iron, fully sealed against oil leaks and protected against dust. Due to the cube shape, all 6 sides of the gear box can be used as mounting surfaces. The diameters $l_1$ and $l_2$ are provided for use as alignment studs.

**Gearing:** Hardened bevel gears, lapped in pairs

**Ratios:** 1:1, 1.5:1, 2:1, 3:1, 4:1, 5:1, 6:1
Special transmission ratios available on request. Size 0 only to 3:1.

**Bearing System:** Generously dimensioned roller bearings, reinforced bearings on request.

**Lubrication:** The gearboxes are fully enclosed, lubricated for life and maintenance free. On request, the gearboxes can also be supplied with oil change lubrication or NO-TOX lubrication for the food industry. If the gearbox is used at higher speeds (see table) venting must be provided. For this purpose, please state the mounting position (downward-facing side) and operating time.

**Model K:** Input side A: Ratio for gearing up.
Input side C: Transmission ratio for gearing down.

**Model L:** Straight-through shaft, slowly turning.

**Model H:** Straight-through hollow shaft, slowly turning.

**Ordering details: e.g.: Type, Model, Size, Version, Mounting Side (A-F), Ratio, Mounting Position, Output Speed, Product No.**

**Model K** **Page 674 - 675**

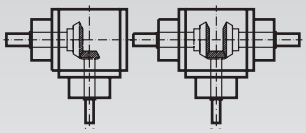

Version 10 Version 20

**Model L** **Page 676 - 677**

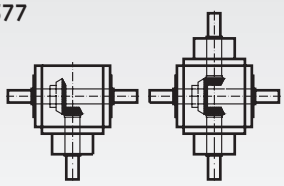

Version 30 Version 60

**Model H** **Page 678 - 679**

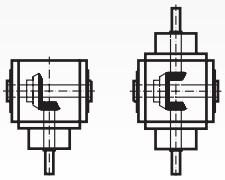

Version 70 Version 80

## Selection of the Gearbox Size

The following pages serve to determine the required gearbox size from the tables considering:

**Output Torque – Power – Load of Input and Output Shaft**

In this process, all 3 factors must be taken into consideration, when selecting the gearbox according to the specific requirements. The stated figures refer to an operating time of 100%. Operating time 8h/day. Ambient temperature 20°C, shock-free operation and no additional cooling. If the operating conditions differ from the above, the following factors have to be regarded when determining the required gearbox size (see examples).

## Factors by which the transmissible torque has to be multiplied:

| | Output (load type of driven machine) | | | |
|---|---|---|---|---|
| **Input** | Uniform | Medium shocks | Strong shocks | Operating time |
| Uniform | 1.0 | 1.25 | 1.75 | up to 2 h/day: Load factor x 0.8 |
| Light shocks | 1.25 | 1.5 | 2.0 | up to 8 h/day: Load factor x 1.0 |
| Medium shocks | 1.5 | 1.75 | 2.25 | up to 8 h/day: Load factor x 1.25 |

The product of **transmissible torque x load factor x operating time factor** has to be **smaller** than the **permiss. torque** stated in the table.

**Example:**
**Torque:** 250 Nm; Load factor 1.5; Operating time 1.5 h/day
**Torque for gearbox selection:** 250 Nm x 1.5 x 0.8 = 300 Nm; i = 1 : 1; n = 250 $min^{-1}$ = Selected Gearbox Size 25.

## Factors determining the max. transmissible power considering heating up of the gear box:

| Ambient temperature T | Operating time OT |
|---|---|
| 10° C: permiss. power x 1.2 | OT 100% permiss. power x 1.0 |
| 20° C: permiss. power x 1.0 | OT 80% permiss. power x 1.2 |
| 30° C: permiss. power x 0.9 | OT 60% permiss. power x 1.4 |
| 40° C: permiss. power x 0.8 | OT 40% permiss. power x 1.6 |
| 50° C: permiss. power x 0.7 | OT 20% permiss. power x 1.8 |

At the same time do not exceed the permiss.$T_2$!

| Max. permiss. power output without cooling at 100% OT | |
|---|---|
| Gearbox size 0 | 1.5 kW |
| Gearbox size 1 | 4.0 kW |
| Gearbox size 2 | 7.0 kW |
| Gearbox size 25 | 17.0 kW |
| Gearbox size 30 | 26.0 kW |

If the **permissible** power multiplied with the ambient temperature factor and the operating time is **smaller** than the **existing** power, additional cooling of the gearbox must be provided.

**Example:**
Gearbox size 25; i = 1 : 1; n = 750 $min^{-1}$;
P = 25.63 kW; T = 30°C, OT = 20%
Maximum power from the table: 17 kW x 0.9 x 1.8 = 27.5 kW
Gearbox size sufficient, no additional cooling required.

## Bevel Gearboxes KU/I, Model K, Technical Data

| Ratio | Size | Version 10 Product No. | Version 20 Product No. | Permissible Output Torque $T_2$ in Nm** at Output Speed $n_2$ in $min^{-1}$ | | | | | | | Max. Input Power $P_1$ in kW** at Input Speed $n_1$ in $min^{-1}$ | | | | | | |
|---|---|---|---|---|---|---|---|---|---|---|---|---|---|---|---|---|---|
| | | | | 50 | 250 | 500 | 750 | 1000 | 1500 | 3000 | 50 | 250 | 500 | 750 | 1000 | 1500 | 3000 |
| 1 : 1 | 0 | *412 001 00 | 412 002 00 | 18 | 17 | 15 | 13 | 12 | 11 | 10 | 0,1 | 0,47 | 0,83 | 1,07 | 1,32 | 1,82 | 3,31 |
| | 1 | *412 004 00 | 412 005 00 | 50 | 44 | 40 | 37 | 34 | 32 | 27 | 0,28 | 1,21 | 2,2 | 3,06 | 3,75 | 5,29 | 8,93 |
| | 2 | *412 007 00 | 412 008 00 | 130 | 123 | 115 | 103 | 92 | 82 | 66 | 0,72 | 3,39 | 6,34 | 8,51 | 10,14 | 13,56 | 21,82 |
| | 25 | *412 010 00 | 412 011 00 | 380 | 350 | 330 | 310 | 290 | 260 | --- | 2,09 | 9,64 | 18,19 | 25,63 | 31,96 | 42,99 | --- |
| | 30 | *412 013 00 | 412 014 00 | 750 | 710 | 620 | 555 | 510 | 450 | --- | 4,13 | 19,56 | 34,17 | 45,88 | 56,21 | 74,4 | --- |
| | Size | Product No. | Product No. | 33 | 167 | 333 | 500 | 667 | 1000 | 2000 | 50 | 250 | 500 | 750 | 1000 | 1500 | 3000 |
| 1,5 : 1 | 0 | 412 001 01 | 412 002 01 | 18 | 17 | 15 | 13 | 12 | 11 | 10 | 0,07 | 0,31 | 0,55 | 0,72 | 0,88 | 1,21 | 2,2 |
| | 1 | 412 004 01 | 412 005 01 | 45 | 40 | 37 | 35 | 32 | 29 | 25 | 0,16 | 0,74 | 1,36 | 1,93 | 2,35 | 3,2 | 5,51 |
| | 2 | 412 007 01 | 412 008 01 | 113 | 108 | 105 | 94 | 86 | 78 | 61 | 0,41 | 1,99 | 3,85 | 5,18 | 6,32 | 8,6 | 13,45 |
| | 25 | 412 010 01 | 412 011 01 | 355 | 330 | 315 | 295 | 280 | 252 | 185 | 1,29 | 6,07 | 11,56 | 16,26 | 20,59 | 27,78 | 40,78 |
| | 30 | 412 013 01 | 412 014 01 | 750 | 690 | 615 | 550 | 505 | 437 | 330 | 2,73 | 12,7 | 22,57 | 30,31 | 37,13 | 48,17 | 72,75 |
| | Size | Product No. | Product No. | 25 | 125 | 250 | 375 | 500 | 750 | 1500 | 50 | 250 | 500 | 750 | 1000 | 1500 | 3000 |
| 2 : 1 | 0 | *412 001 02 | 412 002 02 | 18 | 17 | 15 | 13 | 12 | 11 | 10 | 0,05 | 0,23 | 0,41 | 0,54 | 0,66 | 0,91 | 1,65 |
| | 1 | *412 004 02 | 412 005 02 | 37 | 36 | 34 | 32 | 31 | 27 | 23 | 0,1 | 0,5 | 0,94 | 1,32 | 1,71 | 2,23 | 3,8 |
| | 2 | *412 007 02 | 412 008 02 | 107 | 98 | 92 | 86 | 81 | 73 | 56 | 0,29 | 1,35 | 2,54 | 3,55 | 4,46 | 6,03 | 9,26 |
| | 25 | *412 010 02 | 412 011 02 | 355 | 320 | 300 | 280 | 270 | 245 | 170 | 0,98 | 4,41 | 8,27 | 11,57 | 14,88 | 20,25 | 28,11 |
| | 30 | 412 013 02 | 412 014 02 | 750 | 680 | 610 | 540 | 500 | 425 | 310 | 2,07 | 9,37 | 16,81 | 22,32 | 27,56 | 35,13 | 51,25 |
| | Size | Product No. | Product No. | 17 | 83 | 167 | 250 | 333 | 500 | 1000 | 50 | 250 | 500 | 750 | 1000 | 1500 | 3000 |
| 3 : 1 | 0 | *412 001 03 | 412 002 03 | 14 | 13 | 13 | 12 | 12 | 11 | 10 | 0,03 | 0,12 | 0,24 | 0,33 | 0,44 | 0,61 | 1,1 |
| | 1 | *412 004 03 | 412 005 03 | 37 | 36 | 34 | 32 | 31 | 27 | 23 | 0,07 | 0,33 | 0,63 | 0,88 | 1,14 | 1,49 | 2,54 |
| | 2 | *412 007 03 | 412 008 03 | 110 | 95 | 90 | 87 | 82 | 74 | 58 | 0,21 | 0,87 | 1,66 | 2,40 | 3,01 | 4,08 | 6,39 |
| | 25 | 412 010 03 | 412 011 03 | 305 | 280 | 260 | 250 | 245 | 230 | 190 | 0,57 | 2,56 | 4,79 | 6,89 | 8,99 | 12,68 | 20,94 |
| | 30 | 412 013 03 | 412 014 03 | 690 | 630 | 600 | 530 | 490 | 470 | 420 | 1,29 | 5,76 | 11,04 | 15,98 | 20,37 | 28,38 | 46,29 |
| | Size | Product No. | Product No. | 12,5 | 62,5 | 125 | 187,5 | 250 | 375 | 750 | 50 | 250 | 500 | 750 | 1000 | 1500 | 3000 |
| 4 : 1 | 1 | 412 004 04 | 412 005 04 | 37 | 36 | 34 | 32 | 31 | 27 | 23 | 0,05 | 0,25 | 0,47 | 0,66 | 0,85 | 1,12 | 1,9 |
| | 2 | 412 007 04 | 412 008 04 | 90 | 87 | 84 | 82 | 79 | 74 | 60 | 0,12 | 0,6 | 1,16 | 1,69 | 2,18 | 3,06 | 4,96 |
| | 25 | 412 010 04 | 412 011 04 | 280 | 270 | 260 | 250 | 240 | 220 | 180 | 0,39 | 1,86 | 3,58 | 5,17 | 6,61 | 9,09 | 14,88 |
| | 30 | 412 013 04 | 412 014 04 | 580 | 550 | 525 | 510 | 485 | 420 | 350 | 0,8 | 3,79 | 7,23 | 10,54 | 13,36 | 18,81 | 28,93 |
| | Size | Product No. | Product No. | 10 | 50 | 100 | 150 | 200 | 300 | 600 | 50 | 250 | 500 | 750 | 1000 | 1500 | 3000 |
| 5 : 1 | 1 | 412 004 05 | 412 005 05 | 37 | 36 | 34 | 32 | 31 | 27 | 23 | 0,04 | 0,2 | 0,37 | 0,53 | 0,68 | 0,89 | 1,52 |
| | 2 | 412 007 05 | 412 008 05 | 95 | 92 | 89 | 86 | 80 | 72 | 60 | 0,1 | 0,51 | 0,98 | 1,42 | 1,76 | 2,38 | 3,97 |
| | 25 | 412 010 05 | 412 011 05 | 280 | 270 | 250 | 240 | 225 | 215 | 180 | 0,32 | 1,49 | 2,76 | 3,97 | 4,96 | 7,11 | 11,9 |
| | 30 | 412 013 05 | 412 014 05 | 525 | 505 | 470 | 440 | 420 | 380 | 300 | 0,58 | 2,78 | 5,18 | 7,27 | 9,26 | 12,57 | 19,84 |
| | Size | Product No. | Product No. | 8 | 42 | 83 | 125 | 167 | 250 | 500 | 50 | 250 | 500 | 750 | 1000 | 1500 | 3000 |
| 6 : 1 | 1 | 412 004 06 | 412 005 06 | 33 | 30 | 29 | 29 | 29 | 27 | 23 | 0,03 | 0,14 | 0,27 | 0,4 | 0,53 | 0,74 | 1,25 |
| | 2 | 412 007 06 | 412 008 06 | 71 | 69 | 68 | 68 | 66 | 64 | 54 | 0,06 | 0,33 | 0,63 | 0,94 | 1,22 | 1,75 | 2,95 |
| | 25 | 412 010 06 | 412 011 06 | 210 | 199 | 187 | 176 | 164 | 143 | 129 | 0,18 | 0,92 | 1,72 | 2,43 | 3,01 | 3,95 | 7,09 |

* Gearboxes in stock (without ventilation).

** Transmission ratio for gearing down. For gearing up the values for 1:1 apply. In addition the heating up process has to be considered (see page 673).

## Max. Speed in $min^{-1}$ for Gear Boxes without Ventilation, at the Output Shaft, i = 1:1 to 6:1

For version 10 and horizontal mounting position. For version 20 the values have to be halved. Values for other OT and other mounting positions on request.

| Operating Time | Size 0 | Size 1* | Size 2* | Size 25* | Size 30* |
|---|---|---|---|---|---|
| ED 100 % | 1100 | 700 | 600 | 400 | 300 |
| ED 30 % | 1900 | 1300 | 1000 | 700 | 500 |

* From size 1 available with ventilation against surcharge.

## Permissible Radial and Axial Loads at shaft $d_1$

| Gearbox Size | T Nm | $n_1$ [ $min^{-1}$] - $F_R$ [N] 3000 | 1000 | 500 | 250 | 100 | 50< |
|---|---|---|---|---|---|---|---|
| 0 | < 12 | 180 | 250 | 300 | 350 | 450 | 550 |
| | > 12 | 150 | 210 | 250 | 290 | 380 | 460 |
| 1 | < 30 | 300 | 400 | 470 | 580 | 700 | 800 |
| | > 30 | 250 | 330 | 390 | 490 | 590 | 670 |
| 2 | < 80 | 470 | 620 | 720 | 900 | 1150 | 1400 |
| | > 80 | 390 | 520 | 600 | 750 | 960 | 1170 |
| 25 | < 220 | 1200 | 1600 | 1900 | 2200 | 2850 | 3300 |
| | > 220 | 1000 | 1340 | 1590 | 1840 | 2380 | 2750 |
| 30 | < 500 | 2200 | 1700 | 3200 | 3900 | 5000 | 6200 |
| | > 500 | 1840 | 1420 | 2670 | 3250 | 4170 | 5170 |

The maximum permiss. radial forces stated in the table are calculated for the centre of the output shaft end, also calculating in the speed and torque. The values were calculated for the most unfavourable load direction. Precise calculation of load and rotational direction may lead to higher permissible loads for the shaft – please ask us.

## Permissible Radial and Axial Loads at shaft $d_2$

| Gearbox Size | T Nm | $n_1$ [ $min^{-1}$] - $F_R$ [N] 3000 | 1000 | 500 | 250 | 100 | 50 |
|---|---|---|---|---|---|---|---|
| 0 | < 12 | 180 | 250 | 300 | 350 | 450 | 550 |
| | > 12 | 150 | 210 | 250 | 290 | 380 | 460 |
| 1 | < 30 | 300 | 400 | 470 | 580 | 700 | 800 |
| | > 30 | 250 | 330 | 390 | 490 | 590 | 670 |
| 2 | < 80 | 470 | 620 | 720 | 900 | 1150 | 1400 |
| | > 80 | 390 | 520 | 600 | 750 | 960 | 1170 |
| 25 | < 220 | 1200 | 1600 | 1900 | 2200 | 2850 | 3300 |
| | > 220 | 1000 | 1340 | 1590 | 1840 | 2380 | 2750 |
| 30 | < 500 | 2200 | 1700 | 3200 | 3900 | 5000 | 6200 |
| | > 500 | 1840 | 1420 | 2670 | 3250 | 4170 | 5170 |

Axial loads $F_A$ can be absorbed, without need for further calculation, up to about 50% of the permiss. radial forces. If the axial load exceeds this value considerably or if combined loads of $F_R$ and $F_A$ occur – please ask us.

## Dimensions Table Bevel Gearboxes KU/I Model K

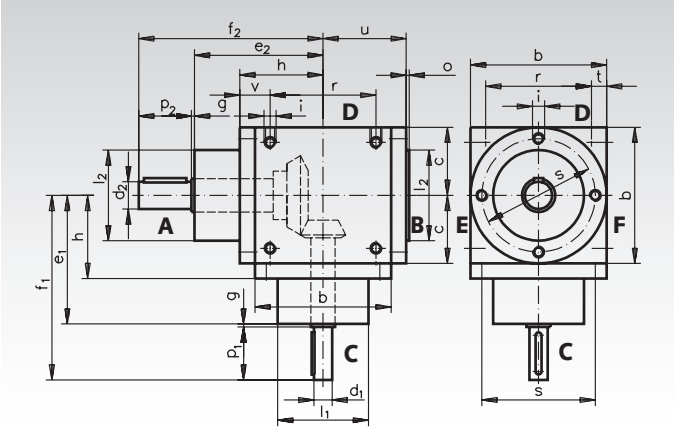


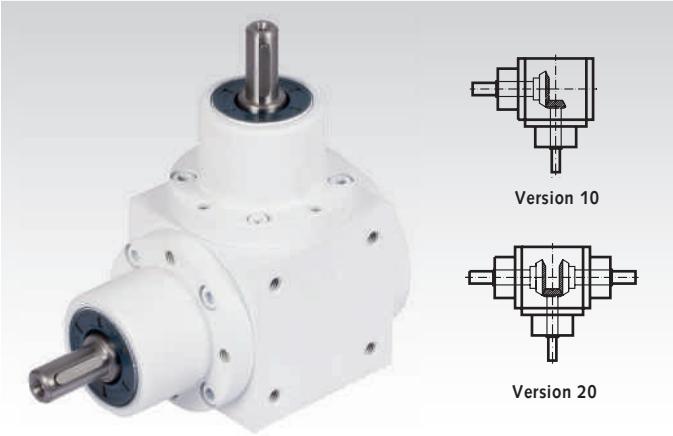


The driving unit can be connected to either $d_1$ or $d_2$, so that transmission ratios of up to 6 : 1 for gearing down and for gearing up are possible (apart from gearbox size 0).
Shaft ends for all types: Tolerance = $j_6$; Thread alignment according to DIN 332 page 2; Keyways according to DIN 6885/1.
Threaded holes for mounting on all sides of the gearbox as standard. Thread depth of mounting holes = 2 x thread diameter or the thickness of the flange.

Dimensions for i = 1 : 1 to 6 : 1 (intermediate transmission ratios on request)

| Size | b mm | c mm | $d_1$ j6 mm | | | | $d_2$ j6 mm | $e_1$ mm | | | $e_2$ mm |
|---|---|---|---|---|---|---|---|---|---|---|---|
| | | | 1 : 1<br>1,5 : 1<br>2 : 1 | 3 : 1 | 4 : 1 | 5 : 1<br>6 : 1 | 1 : 1<br>to<br>6 : 1 | 1 : 1<br>1,5 : 1<br>2 : 1 | 3 : 1 | 4 : 1<br>5 : 1<br>6 : 1 | |
| **0** | 65 | 32,5 | 12 | 12 | - | - | 12 | 72 | 72 | - | 72 |
| **1** | 90 | 45 | 18 | 12 | 12 | 12 | 18 | 85 | 85 | 95 | 85 |
| **2** | 120 | 60 | 25 | 20 | 20 | 15 | 25 | 115 | 115 | 125 | 115 |
| **25** | 160 | 80 | 35 | 28 | 24 | 24 | 35 | 150 | 150 | 170 | 150 |
| **30** | 200 | 100 | 42 | 35 | 35 | 28 | 42 | 190 | 190 | 190 | 190 |

| Size | $f_1$ mm | | | | $f_2$ mm | g mm | h mm | i mm | $l_1$ f7 mm | | | $l_2$ f7 mm | o mm |
|---|---|---|---|---|---|---|---|---|---|---|---|---|---|
| | 1 : 1<br>1,5 : 1<br>2 : 1 | 3 : 1 | 4 : 1 | 5 : 1<br>6 : 1 | | | | | 1 : 1<br>1,5 : 1<br>2 : 1 | 3 : 1<br>4 : 1 | 5 : 1<br>6 : 1 | | |
| **0** | 100 | 100 | - | - | 100 | 2 | 42 | M6 | 44 | 44 | - | 44 | 2 |
| **1** | 122 | 122 | 132 | 132 | 122 | 2 | 55 | M8 | 60 | 60 | 60 | 60 | 2 |
| **2** | 162 | 162 | 172 | 162 | 162 | 2 | 75 | M10 | 80 | 80 | 70 | 80 | 3 |
| **25** | 212 | 212 | 232 | 232 | 212 | 2 | 95 | M12 | 110 | 100 | 100 | 110 | 3 |
| **30** | 273 | 261 | 261 | 261 | 273 | 3 | 120 | M12 | 120 | 120 | 110 | 120 | 3 |

| Size | $p_1$ mm | | | $p_2$ mm | r mm | s mm | t mm | u mm | v mm |
|---|---|---|---|---|---|---|---|---|---|
| | 1 : 1<br>1,5 : 1<br>2 : 1 | 3 : 1<br>4 : 1 | 5 : 1<br>6 : 1 | 1 : 1<br>to<br>6 : 1 | | | | | |
| **0** | 26 | 26 | - | 26 | 45 | 54 | 10 | 42 | 19,5 |
| **1** | 35 | 35 | 35 | 35 | 70 | 75 | 10 | 55 | 20,0 |
| **2** | 45 | 45 | 35 | 45 | 100 | 100 | 10 | 72 | 25,0 |
| **25** | 60 | 60 | 60 | 60 | 120 | 135 | 20 | 95 | 35,0 |
| **30** | 80 | 68 | 68 | 80 | 160 | 175 | 20 | 117 | 40,0 |

| Size | Feather Key Size at $d_1$ mm | | | Feather Key Size at $d_2$ and $d_3$ mm | Weight kg |
|---|---|---|---|---|---|
| | 1 : 1<br>1,5 : 1<br>2 : 1 | 3 : 1<br>4 : 1 | 5 : 1<br>6 : 1 | 1 : 1<br>to<br>6 : 1 | |
| **0** | 4 x 20 | 4 x 20 | - | 4 x 20 | 2,5 |
| **1** | 6 x 28 | 4 x 28 | 4 x 28 | 6 x 28 | 5,5 |
| **2** | 8 x 36 | 6 x 36 | 5 x 28 | 8 x 36 | 12 |
| **25** | 10 x 50 | 8 x 50 | 8 x 50 | 10 x 50 | 24 |
| **30** | 12 x 70 | 10 x 63 | 8 x 63 | 12 x 70 | 48 |

| Size | K 0 | K 1 | K 2 | K 25 | K 30 |
|---|---|---|---|---|---|
| **Oil volume (in dm³)** | 0,1 | 0,3 | 0,6 | 1,2 | 2,5 |

## Bevel Gearboxes KU/I, Model L, Technical Data

| Ratio | Size | Version 30 Product No. | Version 60 Product No. | Permissible Output Torque $T_2$ in Nm** at Output Speed $n_2$ in $min^{-1}$ | | | | | | | Max. Input Power $P_1$ in kW** at Input Speed $n_1$ in $min^{-1}$ | | | | | | |
|---|---|---|---|---|---|---|---|---|---|---|---|---|---|---|---|---|---|
| | Size | Product No. | Product No. | 50 | 250 | 500 | 750 | 1000 | 1500 | 3000 | 50 | 250 | 500 | 750 | 1000 | 1500 | 3000 |
| 1 : 1 | 0 | *412 031 00 | 412 032 00 | 18 | 17 | 15 | 13 | 12 | 11 | 10 | 0,1 | 0,47 | 0,83 | 1,07 | 1,32 | 1,82 | 3,31 |
| | 1 | *412 034 00 | 412 035 00 | 50 | 44 | 40 | 37 | 34 | 32 | 27 | 0,28 | 1,21 | 2,2 | 3,06 | 3,75 | 5,29 | 8,93 |
| | 2 | *412 037 00 | 412 038 00 | 130 | 123 | 115 | 103 | 92 | 82 | 66 | 0,72 | 3,39 | 6,34 | 8,51 | 10,14 | 13,56 | 21,82 |
| | 25 | *412 040 00 | 412 041 00 | 380 | 350 | 330 | 310 | 290 | 260 | --- | 2,09 | 9,64 | 18,19 | 25,63 | 31,96 | 42,99 | --- |
| | 30 | 412 043 00 | 412 044 00 | 750 | 710 | 620 | 555 | 510 | 450 | --- | 4,13 | 19,56 | 34,17 | 45,88 | 56,21 | 74,4 | --- |
| | Size | Product No. | Product No. | 33 | 167 | 333 | 500 | 667 | 1000 | 2000 | 50 | 250 | 500 | 750 | 1000 | 1500 | 3000 |
| 1,5 : 1 | 0 | 412 031 01 | 412 032 01 | 18 | 17 | 15 | 13 | 12 | 11 | 10 | 0,07 | 0,31 | 0,55 | 0,72 | 0,88 | 1,21 | 2,2 |
| | 1 | 412 034 01 | 412 035 01 | 45 | 40 | 37 | 35 | 32 | 29 | 25 | 0,16 | 0,74 | 1,36 | 1,93 | 2,35 | 3,2 | 5,51 |
| | 2 | 412 037 01 | 412 038 01 | 113 | 108 | 105 | 94 | 86 | 78 | 61 | 0,41 | 1,99 | 3,85 | 5,18 | 6,32 | 8,6 | 13,45 |
| | 25 | 412 040 01 | 412 041 01 | 355 | 330 | 315 | 295 | 280 | 252 | 185 | 1,29 | 6,07 | 11,56 | 16,26 | 20,59 | 27,78 | 40,78 |
| | 30 | 412 043 01 | 412 044 01 | 750 | 690 | 615 | 550 | 505 | 437 | 330 | 2,73 | 12,7 | 22,57 | 30,31 | 37,13 | 48,17 | 72,75 |
| | Size | Product No. | Product No. | 25 | 125 | 250 | 375 | 500 | 750 | 1500 | 50 | 250 | 500 | 750 | 1000 | 1500 | 3000 |
| 2 : 1 | 0 | *412 031 02 | 412 032 02 | 18 | 17 | 15 | 13 | 12 | 11 | 10 | 0,05 | 0,23 | 0,41 | 0,54 | 0,66 | 0,91 | 1,65 |
| | 1 | *412 034 02 | 412 035 02 | 37 | 36 | 34 | 32 | 31 | 27 | 23 | 0,1 | 0,5 | 0,94 | 1,32 | 1,71 | 2,23 | 3,8 |
| | 2 | *412 037 02 | 412 038 02 | 107 | 98 | 92 | 86 | 81 | 73 | 56 | 0,29 | 1,35 | 2,54 | 3,55 | 4,46 | 6,03 | 9,26 |
| | 25 | *412 040 02 | 412 041 02 | 355 | 320 | 300 | 280 | 270 | 245 | 170 | 0,98 | 4,41 | 8,27 | 11,57 | 14,88 | 20,25 | 28,11 |
| | 30 | 412 043 02 | 412 044 02 | 750 | 680 | 610 | 540 | 500 | 425 | 310 | 2,07 | 9,37 | 16,81 | 22,32 | 27,56 | 35,13 | 51,25 |
| | Size | Product No. | Product No. | 17 | 83 | 167 | 250 | 333 | 500 | 1000 | 50 | 250 | 500 | 750 | 1000 | 1500 | 3000 |
| 3 : 1 | 0 | *412 031 03 | 412 032 03 | 14 | 13 | 13 | 12 | 12 | 11 | 10 | 0,03 | 0,12 | 0,24 | 0,33 | 0,44 | 0,61 | 1,1 |
| | 1 | *412 034 03 | 412 035 03 | 37 | 36 | 34 | 32 | 31 | 27 | 23 | 0,07 | 0,33 | 0,63 | 0,88 | 1,14 | 1,49 | 2,54 |
| | 2 | *412 037 03 | 412 038 03 | 110 | 95 | 90 | 87 | 82 | 74 | 58 | 0,21 | 0,87 | 1,66 | 2,40 | 3,01 | 4,08 | 6,39 |
| | 25 | 412 040 03 | 412 041 03 | 305 | 280 | 260 | 250 | 245 | 230 | 190 | 0,57 | 2,56 | 4,79 | 6,89 | 8,99 | 12,68 | 20,94 |
| | 30 | 412 043 03 | 412 044 03 | 690 | 630 | 600 | 530 | 490 | 470 | 420 | 1,29 | 5,76 | 11,04 | 15,98 | 20,37 | 28,38 | 46,29 |
| | Size | Product No. | Product No. | 12,5 | 62,5 | 125 | 187,5 | 250 | 375 | 750 | 50 | 250 | 500 | 750 | 1000 | 1500 | 3000 |
| 4 : 1 | 1 | 412 034 04 | 412 035 04 | 37 | 36 | 34 | 32 | 31 | 27 | 23 | 0,05 | 0,25 | 0,47 | 0,66 | 0,85 | 1,12 | 1,9 |
| | 2 | 412 037 04 | 412 038 04 | 90 | 87 | 84 | 82 | 79 | 74 | 60 | 0,12 | 0,6 | 1,16 | 1,69 | 2,18 | 3,06 | 4,96 |
| | 25 | 412 040 04 | 412 041 04 | 280 | 270 | 260 | 250 | 240 | 220 | 180 | 0,39 | 1,86 | 3,58 | 5,17 | 6,61 | 9,09 | 14,88 |
| | 30 | 412 043 04 | 412 044 04 | 580 | 550 | 525 | 510 | 485 | 420 | 350 | 0,8 | 3,79 | 7,23 | 10,54 | 13,36 | 18,81 | 28,93 |
| | Size | Product No. | Product No. | 10 | 50 | 100 | 150 | 200 | 300 | 600 | 50 | 250 | 500 | 750 | 1000 | 1500 | 3000 |
| 5 : 1 | 1 | 412 034 05 | 412 035 05 | 37 | 36 | 34 | 32 | 31 | 27 | 23 | 0,04 | 0,2 | 0,37 | 0,53 | 0,68 | 0,89 | 1,52 |
| | 2 | 412 037 05 | 412 038 05 | 95 | 92 | 89 | 86 | 80 | 72 | 60 | 0,1 | 0,51 | 0,98 | 1,42 | 1,76 | 2,38 | 3,97 |
| | 25 | 412 040 05 | 412 041 05 | 280 | 270 | 250 | 240 | 225 | 215 | 180 | 0,32 | 1,49 | 2,76 | 3,97 | 4,96 | 7,11 | 11,9 |
| | 30 | 412 043 05 | 412 044 05 | 525 | 505 | 470 | 440 | 420 | 380 | 300 | 0,58 | 2,78 | 5,18 | 7,27 | 9,26 | 12,57 | 19,84 |
| | Size | Product No. | Product No. | 8 | 42 | 83 | 125 | 167 | 250 | 500 | 50 | 250 | 500 | 750 | 1000 | 1500 | 3000 |
| 6 : 1 | 1 | 412 034 06 | 412 035 06 | 33 | 30 | 29 | 29 | 29 | 27 | 23 | 0,03 | 0,14 | 0,27 | 0,4 | 0,53 | 0,74 | 1,25 |
| | 2 | 412 037 06 | 412 038 06 | 71 | 69 | 68 | 68 | 66 | 64 | 54 | 0,06 | 0,33 | 0,63 | 0,94 | 1,22 | 1,75 | 2,95 |
| | 25 | 412 040 06 | 412 041 06 | 210 | 199 | 187 | 176 | 164 | 143 | 129 | 0,18 | 0,92 | 1,72 | 2,43 | 3,01 | 3,95 | 7,09 |

* Gearboxes in stock (without ventilation).

** Transmission ratio for gearing down. For gearing up the values for 1:1 apply. In addition the heating up process has to be considered (see page 673).

## Max. Speed in $min^{-1}$ for Gearbox without Ventilation, at the Output Shaft, i = 1:1 to 6:1

For version 30 and horizontal mounting position. For version 60 these values have to be halved. Values for other OT and other mounting positions on request.

| Operating Time | Size 0 | Size 1* | Size 2* | Size 25* | Size 30* |
|---|---|---|---|---|---|
| ED 100 % | 1100 | 700 | 600 | 400 | 300 |
| ED 30 % | 1900 | 1300 | 1000 | 700 | 500 |

* From size 1 available with ventilation against surcharge.

## Permissible Radial and Axial Loads at shaft $d_1$

| Gearbox Size | T Nm | $n_1$ [ $min^{-1}$] - $F_R$ [N] 3000 | 1000 | 500 | 250 | 100 | 50 |
|---|---|---|---|---|---|---|---|
| 0 | < 12 | 180 | 250 | 300 | 350 | 450 | 550 |
| | > 12 | 150 | 210 | 250 | 290 | 380 | 460 |
| 1 | < 30 | 300 | 400 | 470 | 580 | 700 | 800 |
| | > 30 | 250 | 330 | 390 | 490 | 590 | 670 |
| 2 | < 80 | 470 | 620 | 720 | 900 | 1150 | 1400 |
| | > 80 | 390 | 520 | 600 | 750 | 960 | 1170 |
| 25 | < 220 | 1200 | 1600 | 1900 | 2200 | 2850 | 3300 |
| | > 220 | 1000 | 1340 | 1590 | 1840 | 2380 | 2750 |
| 30 | < 500 | 2200 | 1700 | 3200 | 3900 | 5000 | 6200 |
| | > 500 | 1840 | 1420 | 2670 | 3250 | 4170 | 5170 |

The maximum permiss. radial forces stated in the table are calculated for the centre of the output shaft end, also calculating in the speed and torque. The values were calculated for the most unfavourable load direction. Precise calculation of load and rotational direction may lead to higher permissible loads for the shaft – please enquire.

## Permissible Radial and Axial Loads at shaft $d_2$

| Gearbox Size | T Nm | $n_1$ [ $min^{-1}$] - $F_R$ [N] 3000 | 1000 | 500 | 250 | 100 | 50 |
|---|---|---|---|---|---|---|---|
| 0 | < 12 | 300 | 400 | 500 | 650 | 750 | 900 |
| | > 12 | 250 | 330 | 420 | 540 | 630 | 750 |
| 1 | < 30 | 500 | 660 | 800 | 950 | 1250 | 1500 |
| | > 30 | 420 | 550 | 670 | 790 | 1040 | 1250 |
| 2 | < 80 | 750 | 1000 | 1250 | 1500 | 1900 | 2200 |
| | > 80 | 630 | 830 | 1040 | 1250 | 1580 | 1830 |
| 25 | < 220 | 2000 | 2800 | 3300 | 4000 | 5000 | 6500 |
| | > 220 | 1670 | 2340 | 2750 | 3340 | 4170 | 5420 |
| 30 | < 500 | 3200 | 4300 | 5000 | 6500 | 8000 | 10000 |
| | > 500 | 2670 | 3580 | 4170 | 5420 | 6670 | 8330 |

Axial loads $F_A$ can be absorbed, without need for further calculation, up to about 50% of the permiss. radial forces. If the axial load exceeds this value considerably or if combined loads of $F_R$ and $F_A$ occur – please ask us.

## Dimensions Table Bevel Gearboxes KU/I Model L

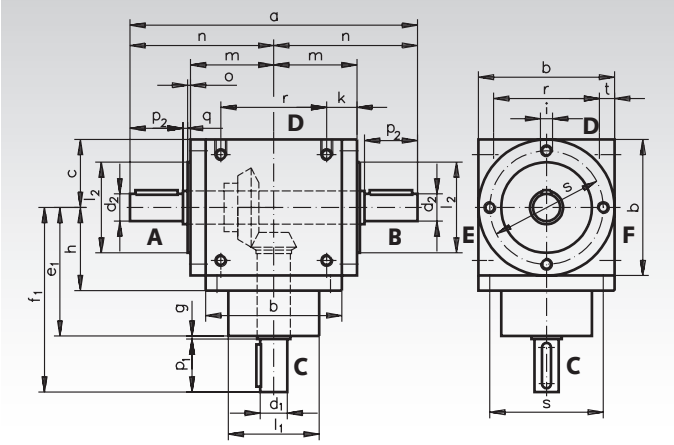


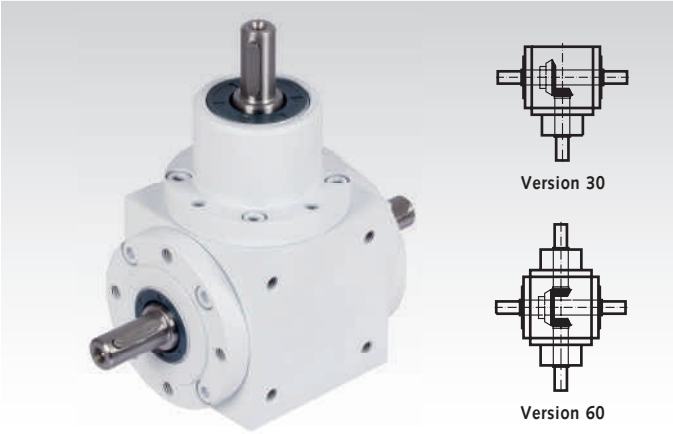


The large bevel gear is usually mounted on the straight-through shaft. It is the slow running one.
The gearbox sizes 1, 2, 25 and 30 can also be supplied as Type LS with straight-through, fast running shaft. In this case the transmission ratio is max. 1 : 2.
Shaft ends for all types: Tolerance = $j_6$; Thread alignment according to DIN 332 page 2; Keyways according to DIN 6885/1.

Threaded holes for mounting on all sides of the gearbox as standard. Thread depth of mounting holes = 2 x thread diameter or the thickness of the flange.

Dimensions for i = 1 : 1 to 6 : 1, power input at $d_1$ (intermediate transmission ratios on request) *Type LS: straight-through fast running shaft.

| Size | a mm | b mm | c mm | $d_1^{j6}$ mm | | | | $d_2^{j6}$ mm | | $e_1$ mm | | | $f_1$ mm | | | | g mm |
|---|---|---|---|---|---|---|---|---|---|---|---|---|---|---|---|---|---|
| | | | | 1 : 1<br>1,5 : 1<br>2 : 1<br>1 : 1,5*<br>1 : 2* | 3 : 1 | 4 : 1 | 5 : 1<br>6 : 1 | 1 : 1<br>bis<br>6 : 1 | 1 : 1,5*<br>1 : 2* | 1 : 1<br>1,5 : 1<br>2 : 1<br>1 : 1,5*<br>1 : 2* | 3 : 1 | 4 : 1<br>5 : 1<br>6 : 1 | 1 : 1<br>1,5 : 1<br>2 : 1<br>1 : 1,5*<br>1 : 2* | 3 : 1 | 4 : 1 | 5 : 1<br>6 : 1 | |
| **0** | 144 | 65 | 32,5 | 12 | 12 | - | - | 12 | - | 72 | 72 | - | 100 | 100 | - | - | 2 |
| **1** | 190 | 90 | 45,0 | 18 | 12 | 12 | 12 | 18 | 14 | 85 | 85 | 98 | 122 | 122 | 132 | 132 | 2 |
| **2** | 244 | 120 | 60,0 | 25 | 20 | 20 | 15 | 25 | 16 | 115 | 115 | 125 | 162 | 162 | 172 | 162 | 2 |
| **25** | 320 | 160 | 80,0 | 35 | 28 | 24 | 24 | 35 | 25 | 150 | 150 | 170 | 212 | 212 | 232 | 232 | 2 |
| **30** | 406 | 200 | 100,0 | 42 | 35 | 35 | 28 | 42 | 35 | 190 | 190 | 190 | 273 | 261 | 261 | 261 | 3 |

| Size | h mm | i mm | k mm | $l_1^{f7}$ mm | | | $l_2^{f7}$ mm | m mm | n mm | o mm | $p_1$ mm | | | $p_2$ mm |
|---|---|---|---|---|---|---|---|---|---|---|---|---|---|---|
| | | | | 1 : 1<br>1,5 : 1<br>2 : 1<br>1 : 1,5*<br>1 : 2* | 3 : 1<br>4 : 1 | 5 : 1<br>6 : 1 | | | | | 1 : 1<br>1,5 : 1<br>2 : 1<br>1 : 1,5*<br>1 : 2* | 3 : 1<br>4 : 1 | 5 : 1<br>6 : 1 | |
| **0** | 42 | M6 | 19,5 | 44 | 44 | - | 44 | 42 | 72 | 2 | 26 | 26 | - | 26 |
| **1** | 55 | M8 | 20,0 | 60 | 60 | 60 | 60 | 55 | 95 | 2 | 35 | 35 | 35 | 35 |
| **2** | 75 | M10 | 22,0 | 80 | 80 | 70 | 80 | 72 | 122 | 3 | 45 | 45 | 35 | 45 |
| **25** | 95 | M12 | 35,0 | 110 | 100 | 100 | 110 | 95 | 160 | 3 | 60 | 60 | 60 | 60 |
| **30** | 120 | M12 | 37,0 | 120 | 120 | 110 | 120 | 117 | 203 | 3 | 80 | 68 | 68 | 80 |

| Size | q mm | r mm | s mm | t mm | Feather Key Size at $d_1$ mm | | | Feather Key Size at $d_2$ u. $d_3$ mm | | Weight kg |
|---|---|---|---|---|---|---|---|---|---|---|
| | | | | | 1 : 1<br>1,5 : 1<br>2 : 1<br>1 : 1,5*<br>1 : 2* | 3 : 1<br>4 : 1 | 5 : 1<br>6 : 1 | 1 : 1<br>to<br>6 : 1 | 1 : 1,5*<br>1 : 2* | |
| **0** | 2 | 45 | 54 | 10 | 4 x 20 | 4 x 20 | - | 4 x 20 | - | 2,5 |
| **1** | 3 | 70 | 75 | 10 | 6 x 28 | 4 x 28 | 4 x 28 | 6 x 28 | 5 x 28 | 5,5 |
| **2** | 2 | 100 | 100 | 10 | 8 x 36 | 6 x 36 | 5 x 28 | 8 x 36 | 5 x 36 | 12,0 |
| **25** | 2 | 120 | 135 | 20 | 10 x 50 | 8 x 50 | 8 x 50 | 10 x 50 | 8 x 50 | 24,0 |
| **30** | 3 | 160 | 175 | 20 | 12 x 70 | 10 x 63 | 8 x 63 | 12 x 70 | 10 x 70 | 48,0 |

| Size | L 0 | L 1 | L 2 | L 25 | L 30 |
|---|---|---|---|---|---|
| **Oil volume (in dm³)** | 0,1 | 0,3 | 0,6 | 1,2 | 2,5 |

## Bevel Gearboxes KU/I, Model H, Technical Data

| Ratio | Size | Version 70 Product No. | Version 80 Product No. | Permissible Output Torque $T_2$ in Nm** at Output Speed $n_2$ in $min^{-1}$ | | | | | | | Max. Input Power $P_1$ in kW** at Input Speed $n_1$ in $min^{-1}$ | | | | | | |
|---|---|---|---|---|---|---|---|---|---|---|---|---|---|---|---|---|---|
| | Size | Product No. | Product No. | 50 | 250 | 500 | 750 | 1000 | 1500 | 3000 | 50 | 250 | 500 | 750 | 1000 | 1500 | 3000 |
| 1 : 1 | 0 | *412 061 00 | 412 062 00 | 18 | 17 | 15 | 13 | 12 | 11 | 10 | 0,1 | 0,47 | 0,83 | 1,07 | 1,32 | 1,82 | 3,31 |
| | 1 | *412 064 00 | 412 065 00 | 50 | 44 | 40 | 37 | 34 | 32 | 27 | 0,28 | 1,21 | 2,2 | 3,06 | 3,75 | 5,29 | 8,93 |
| | 2 | *412 067 00 | 412 068 00 | 130 | 123 | 115 | 103 | 92 | 82 | 66 | 0,72 | 3,39 | 6,34 | 8,51 | 10,14 | 13,56 | 21,82 |
| | 25 | *412 070 00 | 412 071 00 | 380 | 350 | 330 | 310 | 290 | 260 | --- | 2,09 | 9,64 | 18,19 | 25,63 | 31,96 | 42,99 | --- |
| | 30 | 412 073 00 | 412 074 00 | 750 | 710 | 620 | 555 | 510 | 450 | --- | 4,13 | 19,56 | 34,17 | 45,88 | 56,21 | 74,4 | --- |
| | Size | Product No. | Product No. | 33 | 167 | 333 | 500 | 667 | 1000 | 2000 | 50 | 250 | 500 | 750 | 1000 | 1500 | 3000 |
| 1,5 : 1 | 0 | 412 061 01 | 412 062 01 | 18 | 17 | 15 | 13 | 12 | 11 | 10 | 0,07 | 0,31 | 0,55 | 0,72 | 0,88 | 1,21 | 2,2 |
| | 1 | 412 064 01 | 412 065 01 | 45 | 40 | 37 | 35 | 32 | 29 | 25 | 0,16 | 0,74 | 1,36 | 1,93 | 2,35 | 3,2 | 5,51 |
| | 2 | 412 067 01 | 412 068 01 | 113 | 108 | 105 | 94 | 86 | 78 | 61 | 0,41 | 1,99 | 3,85 | 5,18 | 6,32 | 8,6 | 13,45 |
| | 25 | 412 070 01 | 412 071 01 | 355 | 330 | 315 | 295 | 280 | 252 | 185 | 1,29 | 6,07 | 11,56 | 16,26 | 20,59 | 27,78 | 40,78 |
| | 30 | 412 073 01 | 412 074 01 | 750 | 690 | 615 | 550 | 505 | 437 | 330 | 2,73 | 12,7 | 22,57 | 30,31 | 37,13 | 48,17 | 72,75 |
| | Size | Product No. | Product No. | 25 | 125 | 250 | 375 | 500 | 750 | 1500 | 50 | 250 | 500 | 750 | 1000 | 1500 | 3000 |
| 2 : 1 | 0 | *412 061 02 | 412 062 02 | 18 | 17 | 15 | 13 | 12 | 11 | 10 | 0,05 | 0,23 | 0,41 | 0,54 | 0,66 | 0,91 | 1,65 |
| | 1 | *412 064 02 | 412 065 02 | 37 | 36 | 34 | 32 | 31 | 27 | 23 | 0,1 | 0,5 | 0,94 | 1,32 | 1,71 | 2,23 | 3,8 |
| | 2 | *412 067 02 | 412 068 02 | 107 | 98 | 92 | 86 | 81 | 73 | 56 | 0,29 | 1,35 | 2,54 | 3,55 | 4,46 | 6,03 | 9,26 |
| | 25 | *412 070 02 | 412 071 02 | 355 | 320 | 300 | 280 | 270 | 245 | 170 | 0,98 | 4,41 | 8,27 | 11,57 | 14,88 | 20,25 | 28,11 |
| | 30 | 412 073 02 | 412 074 02 | 750 | 680 | 610 | 540 | 500 | 425 | 310 | 2,07 | 9,37 | 16,81 | 22,32 | 27,56 | 35,13 | 51,25 |
| | Size | Product No. | Product No. | 17 | 83 | 167 | 250 | 333 | 500 | 1000 | 50 | 250 | 500 | 750 | 1000 | 1500 | 3000 |
| 3 : 1 | 0 | *412 061 03 | 412 062 03 | 14 | 13 | 13 | 12 | 12 | 11 | 10 | 0,03 | 0,12 | 0,24 | 0,33 | 0,44 | 0,61 | 1,1 |
| | 1 | *412 064 03 | 412 065 03 | 37 | 36 | 34 | 32 | 31 | 27 | 23 | 0,07 | 0,33 | 0,63 | 0,88 | 1,14 | 1,49 | 2,54 |
| | 2 | *412 067 03 | 412 068 03 | 110 | 95 | 90 | 87 | 82 | 74 | 58 | 0,21 | 0,87 | 1,66 | 2,40 | 3,01 | 4,08 | 6,39 |
| | 25 | *412 070 03 | 412 071 03 | 305 | 280 | 260 | 250 | 245 | 230 | 190 | 0,57 | 2,56 | 4,79 | 6,89 | 8,99 | 12,68 | 20,94 |
| | 30 | 412 073 03 | 412 074 03 | 690 | 630 | 600 | 530 | 490 | 470 | 420 | 1,29 | 5,76 | 11,04 | 15,98 | 20,37 | 28,38 | 46,29 |
| | Size | Product No. | Product No. | 12,5 | 62,5 | 125 | 187,5 | 250 | 375 | 750 | 50 | 250 | 500 | 750 | 1000 | 1500 | 3000 |
| 4 : 1 | 1 | 412 064 04 | 412 065 04 | 37 | 36 | 34 | 32 | 31 | 27 | 23 | 0,05 | 0,25 | 0,47 | 0,66 | 0,85 | 1,12 | 1,9 |
| | 2 | 412 067 04 | 412 068 04 | 90 | 87 | 84 | 82 | 79 | 74 | 60 | 0,12 | 0,6 | 1,16 | 1,69 | 2,18 | 3,06 | 4,96 |
| | 25 | 412 070 04 | 412 071 04 | 280 | 270 | 260 | 250 | 240 | 220 | 180 | 0,39 | 1,86 | 3,58 | 5,17 | 6,61 | 9,09 | 14,88 |
| | 30 | 412 073 04 | 412 074 04 | 580 | 550 | 525 | 510 | 485 | 420 | 350 | 0,8 | 3,79 | 7,23 | 10,54 | 13,36 | 18,81 | 28,93 |
| | Size | Product No. | Product No. | 10 | 50 | 100 | 150 | 200 | 300 | 600 | 50 | 250 | 500 | 750 | 1000 | 1500 | 3000 |
| 5 : 1 | 1 | 412 064 05 | 412 065 05 | 37 | 36 | 34 | 32 | 31 | 27 | 23 | 0,04 | 0,2 | 0,37 | 0,53 | 0,68 | 0,89 | 1,52 |
| | 2 | 412 067 05 | 412 068 05 | 95 | 92 | 89 | 86 | 80 | 72 | 60 | 0,1 | 0,51 | 0,98 | 1,42 | 1,76 | 2,38 | 3,97 |
| | 25 | 412 070 05 | 412 071 05 | 280 | 270 | 250 | 240 | 225 | 215 | 180 | 0,32 | 1,49 | 2,76 | 3,97 | 4,96 | 7,11 | 11,9 |
| | 30 | 412 073 05 | 412 074 05 | 525 | 505 | 470 | 440 | 420 | 380 | 300 | 0,58 | 2,78 | 5,18 | 7,27 | 9,26 | 12,57 | 19,84 |
| | Size | Product No. | Product No. | 8 | 42 | 83 | 125 | 167 | 250 | 500 | 50 | 250 | 500 | 750 | 1000 | 1500 | 3000 |
| 6 : 1 | 1 | 412 064 06 | 412 065 06 | 33 | 30 | 29 | 29 | 29 | 27 | 23 | 0,03 | 0,14 | 0,27 | 0,4 | 0,53 | 0,74 | 1,25 |
| | 2 | 412 067 06 | 412 068 06 | 71 | 69 | 68 | 68 | 66 | 64 | 54 | 0,06 | 0,33 | 0,63 | 0,94 | 1,22 | 1,75 | 2,95 |
| | 25 | 412 070 06 | 412 071 06 | 210 | 199 | 187 | 176 | 164 | 143 | 129 | 0,18 | 0,92 | 1,72 | 2,43 | 3,01 | 3,95 | 7,09 |

* Gearboxes in stock (without ventilation).

** Transmission ratio for gearing down. For gearing up the values for 1:1 apply. In addition the heating up process has to be considered (see page 673).

## Max. Speed in $min^{-1}$ for Gearbox without Ventilation, at the Output Shaft, i = 1:1 to 6:1

For version 70 and horizontal mounting position. For version 80 these values have to be halved. Values for other OT and other mounting positions on request.

| Operating Time | Size 0 | Size 1* | Size 2* | Size 25* | Size 30* |
|---|---|---|---|---|---|
| ED 100 % | 1100 | 700 | 600 | 400 | 300 |
| ED 30 % | 1900 | 1300 | 1000 | 700 | 500 |

* From size 1 available with ventilation against surcharge.

## Permissible Radial and Axial Loads at shaft $d_1$

| Gearbox Size | T Nm | $n_1$ [ $min^{-1}$] - $F_R$ [N] 3000 | 1000 | 500 | 250 | 100 | 50 |
|---|---|---|---|---|---|---|---|
| 0 | < 12 | 180 | 250 | 300 | 350 | 450 | 550 |
| | > 12 | 150 | 210 | 250 | 290 | 380 | 460 |
| 1 | < 30 | 300 | 400 | 470 | 580 | 700 | 800 |
| | > 30 | 250 | 330 | 390 | 490 | 590 | 670 |
| 2 | < 80 | 470 | 620 | 720 | 900 | 1150 | 1400 |
| | > 80 | 390 | 520 | 600 | 750 | 960 | 1170 |
| 25 | < 220 | 1200 | 1600 | 1900 | 2200 | 2850 | 3300 |
| | > 220 | 1000 | 1340 | 1590 | 1840 | 2380 | 2750 |
| 30 | < 500 | 2200 | 1700 | 3200 | 3900 | 5000 | 6200 |
| | > 500 | 1840 | 1420 | 2670 | 3250 | 4170 | 5170 |

The maximum permiss. radial forces stated in the table are calculated for the centre of the output shaft end, also calculating in the speed and torque. The values were calculated for the most unfavourable load direction. Precise calculation of load and rotational direction may lead to higher permissible loads for the shaft – please ask us.

## Permissible Radial and Axial Loads at shaft $d_2$

| Gearbox Size | T Nm | $n_1$ [ $min^{-1}$] - $F_R$ [N] 3000 | 1000 | 500 | 250 | 100 | 50 |
|---|---|---|---|---|---|---|---|
| 0 | < 12 | 300 | 400 | 500 | 650 | 750 | 900 |
| | > 12 | 250 | 330 | 420 | 540 | 630 | 750 |
| 1 | < 30 | 500 | 660 | 800 | 950 | 1250 | 1500 |
| | > 30 | 420 | 550 | 670 | 790 | 1040 | 1250 |
| 2 | < 80 | 900 | 1200 | 1400 | 1700 | 2100 | 2500 |
| | > 80 | 750 | 1000 | 1170 | 1420 | 1750 | 2080 |
| 25 | < 220 | 2300 | 3100 | 3600 | 4300 | 5300 | 7000 |
| | > 220 | 1920 | 2580 | 3000 | 3580 | 4420 | 5830 |
| 30 | < 500 | 3600 | 4700 | 5400 | 7200 | 9000 | 11000 |
| | > 500 | 3000 | 3900 | 4500 | 6000 | 7500 | 9200 |

Axial loads $F_A$ can be absorbed, without need for further calculation, up to about 50% of the permiss. radial forces. If the axial load exceeds this value considerably or if combined loads of $F_R$ and $F_A$ occur – please ask us.

## Dimensions Table Bevel Gearboxes KU/I Model H

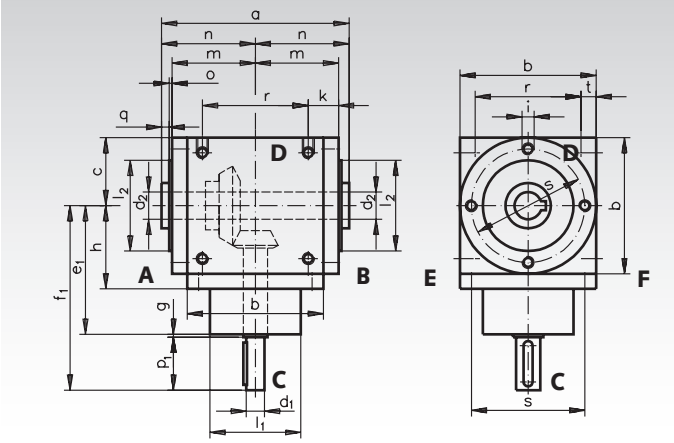


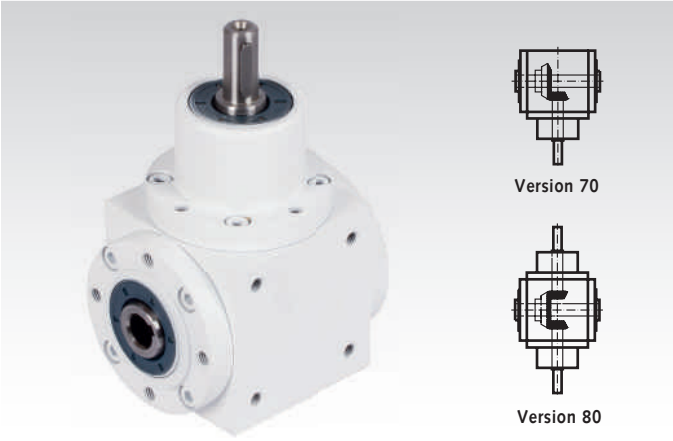


Shaft ends for all types: Tolerance = $j_6$; Thread alignment according to DIN 332 page 2; Keyways according to DIN 6885/1. Tolerance of hollow shaft bore = H7. The hollow shaft is always the slower running one.

Threaded holes for mounting on all sides of the gearbox as standard. Thread depth of mounting holes = 2 x thread diameter or the thickness of the flange.

Dimensions at i = 1 : 1 to 6 : 1, standard power input at $d_1$ (intermediate transmission ratios on request).

| Size | a mm | b mm | c mm | $d_1^{j6}$ mm | | | | $d_2^{H7}$ mm | $e_1$ mm | |
|---|---|---|---|---|---|---|---|---|---|---|
| | 1 : 1 to 6 : 1 | | | 1 : 1 1,5 : 1 2 : 1 | 3 : 1 | 4 : 1 | 5 : 1 6 : 1 | 1 : 1 to 6 : 1 | 1 : 1 bis 3 : 1 | 4 : 1 5 : 1 6 : 1 |
| **0** | 92 | 65 | 32,5 | 12 | 12 | - | - | 12 | 72 | - |
| **1** | 124 | 90 | 45 | 18 | 12 | 12 | 12 | 18 | 85 | 95 |
| **2** | 170 | 120 | 60 | 25 | 20 | 20 | 15 | 25 | 115 | 125 |
| **25** | 206 | 160 | 80 | 35 | 28 | 24 | 24 | 35 | 150 | 170 |
| **30** | 250 | 200 | 100 | 42 | 35 | 35 | 28 | 42 | 190 | 190 |

| Size | $f_1$ mm | | | | g mm | h mm | i mm | k mm | $l_1^{f7}$ mm | | | $l_2^{f7}$ mm | m mm | n mm |
|---|---|---|---|---|---|---|---|---|---|---|---|---|---|---|
| | 1 : 1 1,5 : 1 2 : 1 | 3 : 1 | 4 : 1 | 5 : 1 6 : 1 | | | | | 1 : 1 1,5 : 1 2 : 1 | 3 : 1 4 : 1 | 5 : 1 6 : 1 | | | |
| **0** | 100 | 100 | - | - | 2 | 42 | M6 | 19,5 | 44 | 44 | - | 44 | 42 | 46 |
| **1** | 122 | 122 | 132 | 132 | 2 | 55 | M8 | 20 | 60 | 60 | 60 | 60 | 55 | 62 |
| **2** | 162 | 162 | 172 | 162 | 2 | 75 | M10 | 27 | 80 | 80 | 70 | 80 | 77 | 85 |
| **25** | 213 | 212 | 232 | 232 | 2 | 95 | M12 | 35 | 110 | 100 | 100 | 110 | 95 | 103 |
| **30** | 273 | 261 | 261 | 261 | 3 | 120 | M12 | 37 | 120 | 120 | 110 | 120 | 117 | 125 |

| Size | o mm | $p_1$ mm | | | q mm | r mm | s mm | t mm |
|---|---|---|---|---|---|---|---|---|
| | 1 : 1 to 6 : 1 | 1 : 1 1,5 : 1 2 : 1 | 3 : 1 4 : 1 | 5 : 1 6 : 1 | 1 : 1 to 6 : 1 | | | |
| **0** | 2 | 26 | 26 | - | 2 | 45 | 54 | 10 |
| **1** | 2 | 35 | 35 | 35 | 5 | 70 | 75 | 10 |
| **2** | 3 | 45 | 45 | 35 | 5 | 100 | 100 | 10 |
| **25** | 3 | 60 | 60 | 60 | 5 | 120 | 135 | 20 |
| **30** | 3 | 80 | 68 | 68 | 5 | 160 | 175 | 20 |

| Size | Feather Key Size at $d_1$ mm | | | Keyway Size in Hollow Shaft mm | Weight kg |
|---|---|---|---|---|---|
| | 1 : 1 1,5 : 1 2 : 1 | 3 : 1 4 : 1 | 5 : 1 6 : 1 | | |
| **0** | 4 x 20 | 4 x 20 | - | 4JS9 | 2,1 |
| **1** | 6 x 28 | 4 x 28 | 4 x 28 | 6JS9 | 5,5 |
| **2** | 8 x 36 | 6 x 36 | 5 x 28 | 8JS9 | 12,0 |
| **25** | 10 x 50 | 8 x 50 | 8 x 50 | 10JS9 | 24,0 |
| **30** | 12 x 70 | 10 x 63 | 8 x 63 | 12JS9 | 48,0 |

| Size | H0 | H 1 | H 2 | H 25 | H 30 |
|---|---|---|---|---|---|
| **Oil Volume (in dm³)** | 0,1 | 0,3 | 0,6 | 1,2 | 2,5 |

## Worm Gear Units G/II

**General data:** **Version A:** Centre distance 31 mm.
**Version B:** Centre distance 33 mm.

**Housing:** Aluminium permanent-mould casting, fully sealed against oil leaks and protected against dust, can be mounted in any position.

**Gear set:** Worms hardened and ground, worm gears made from special bronze.

**Bearing System:** Input and output shaft with roller bearing.

**Lubrication:** As a special gearbox oil has been used, in most applications no relubrication or change is required.

Input shaft is the smaller shaft $d_1$.
The permiss. output torque refers to shaft $d_2$.

**Ordering details: e.g.: Type, Version, Ratio, Product No.**

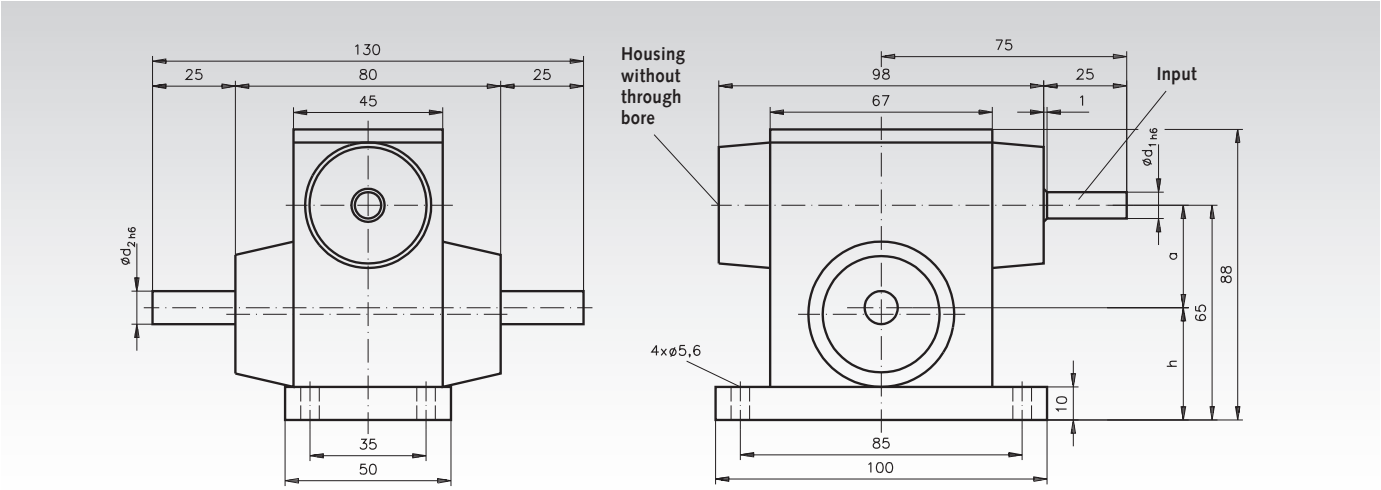


### Version A (Load Bearing Capacity of the Output Shaft Radial = 100 N, Axial = 60 N)

| Product No. | Ratio i | Centre Distance a mm | $d_1$ mm | $d_2$ mm | h mm | max. Output Torque Nm | Weight kg |
|---|---|---|---|---|---|---|---|
| **420 005 00** | 5 : 1 | 31 | 8 | 10 | 34 | 10 | 1,05 |
| **420 007 00** | 7 : 1 | 31 | 8 | 10 | 34 | 10 | 1,05 |
| **420 010 00** | 10 : 1 | 31 | 8 | 10 | 34 | 10 | 1,05 |
| **420 012 00** | 12 : 1 | 31 | 8 | 10 | 34 | 12 | 1,05 |
| **420 015 00** | 15 : 1 | 31 | 8 | 10 | 34 | 11 | 1,05 |
| **420 018 00** | 18 : 1 | 31 | 8 | 10 | 34 | 10 | 1,05 |
| **420 020 00** | 20 : 1 | 31 | 8 | 10 | 34 | 10 | 1,05 |
| **420 024 00** | 24 : 1 | 31 | 8 | 10 | 34 | 9 | 1,05 |
| **420 030 00** | 30 : 1 | 31 | 8 | 10 | 34 | 10 | 1,05 |
| **420 038 00** | 38 : 1 | 31 | 8 | 10 | 34 | 11 | 1,05 |
| **420 050 00** | 50 : 1 | 31 | 8 | 10 | 34 | 9 | 1,05 |
| **420 075 00** | 75 : 1 | 31 | 8 | 10 | 34 | 7 | 1,05 |

### Version B (Load Bearing Capacity of the Output Shaft Radial = 150 N, Axial = 100 N)

| Product No. | Ratio i | Centre Distance a mm | $d_1$ mm | $d_2$ mm | h mm | max. Output Torque Nm | Weight kg |
|---|---|---|---|---|---|---|---|
| **420 107 00** | 7 : 1 | 33 | 10 | 12 | 32 | 12 | 1,15 |
| **420 111 00** | 11,33 : 1 | 33 | 10 | 12 | 32 | 13 | 1,15 |
| **420 115 00** | 15 : 1 | 33 | 10 | 12 | 32 | 13 | 1,15 |
| **420 117 00** | 17 : 1 | 33 | 10 | 12 | 32 | 14 | 1,15 |
| **420 120 00** | 20 : 1 | 33 | 10 | 12 | 32 | 13 | 1,15 |
| **420 124 00** | 24 : 1 | 33 | 10 | 12 | 32 | 13 | 1,15 |
| **420 130 00** | 30 : 1 | 33 | 10 | 12 | 32 | 13 | 1,15 |
| **420 132 00** | 32 : 1 | 33 | 10 | 12 | 32 | 14 | 1,15 |
| **420 138 00** | 38 : 1 | 33 | 10 | 12 | 32 | 14 | 1,15 |
| **420 156 00** | 56 : 1 | 33 | 10 | 12 | 32 | 10 | 1,15 |
| **420 175 00** | 75 : 1 | 33 | 10 | 12 | 32 | 9 | 1,15 |

All shaft diameters with tolerance h6.
Dimensions without stated tolerance are non binding.

## Worm Gear Units KES

Angular drives with hollow output shaft for high torques at very low dimensions. Suitable in a wide variety of applications. One size with center distance 20mm, in 7 ratios.

**Housing:** Aluminium, silver anodized. Sealed against lubricant leaks, protected against dust. Can be mounted in any position. Worm shaft in vertically position not recommended for continuous operation.
**Gearing:** Worm from steel, wheel from special brass.
**Bearing:** Ball bearings with rubber seal RS.
**Lubrication:** Maintenance free grease lubrication.
**Angular backlash:** +/-1°. **Operating time:** 10% at 5 min.
**Life time:** 1,000 hours at max. performance at speed 500 $min^{-1}$ and operating time 20%.
**Permiss. operating temperature:** -20° to +60°C.

**Ordering Details: e.g.: Product No. 420 020 13 Bevel Gearbox KES Size 1**

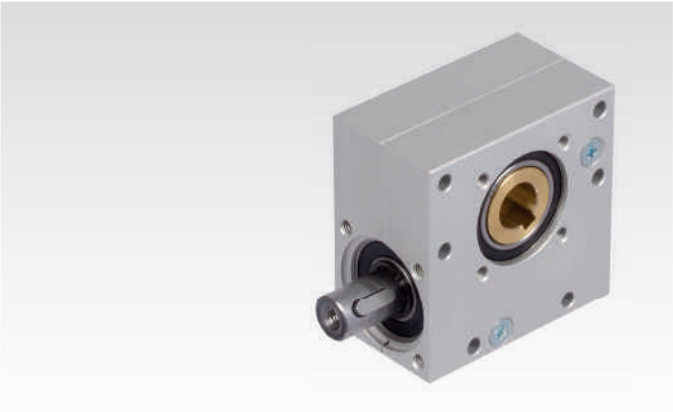

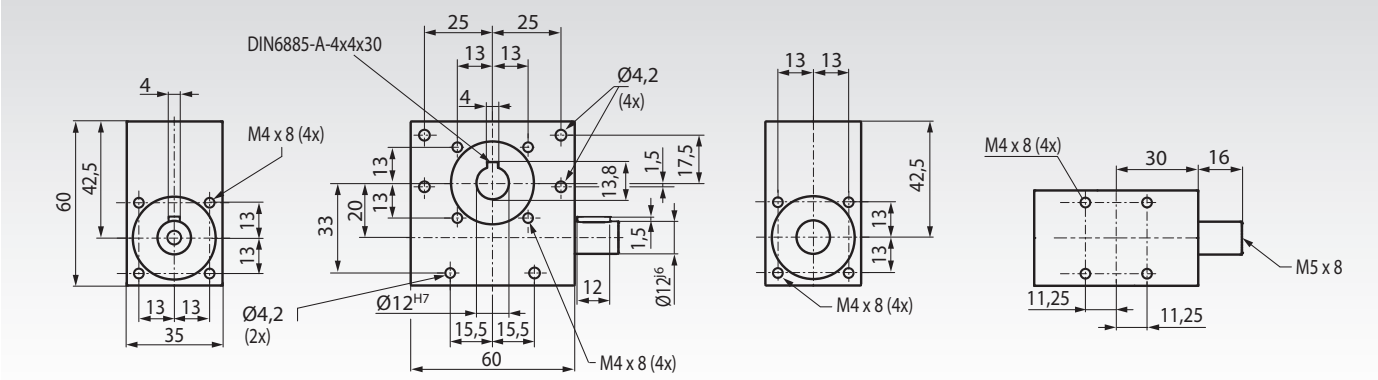


## Performance Data

| Product No. | Ratio i | Self-locking | Permittable Output Torque at Speed 100 $min^{-1}$ Nm | 500 $min^{-1}$ Nm | 1.000 $min^{-1}$ Nm | Permittable Input Power at Speed 100 $min^{-1}$ W | 500 $min^{-1}$ W | 1.000 $min^{-1}$ W | Efficiency approx. η | Shaft Load $F_R$* N | $F_A$** N | Weight g |
|---|---|---|---|---|---|---|---|---|---|---|---|---|
| **420 020 13** | 13 : 1 | no | 18,0 | 17,0 | 15,5 | 18 | 86 | 156 | 0,80 | 200 | 200 | 422 |
| **420 020 15** | 15 : 1 | no | 17,5 | 16,5 | 15,0 | 16 | 76 | 138 | 0,76 | 250 | 250 | 425 |
| **420 020 18** | 18 : 1 | no | 17,5 | 16,0 | 15,0 | 14 | 63 | 118 | 0,74 | 250 | 250 | 426 |
| **420 020 23** | 23 : 1 | no | 16,5 | 16,0 | 15,0 | 11 | 52 | 98 | 0,70 | 250 | 250 | 428 |
| **420 020 30** | 30 : 1 | no | 15,0 | 14,0 | 13,5 | 8 | 37 | 71 | 0,66 | 350 | 350 | 438 |
| **420 020 40** | 40 : 1 | yes | 9,5 | 9,5 | 9,5 | 4 | 21 | 42 | 0,59 | 400 | 400 | 426 |
| **420 020 65** | 65 : 1 | yes | 4,5 | 4,5 | 4,5 | 1 | 8 | 16 | 0,51 | 500 | 500 | 432 |

* Permiss. radial force at $F_A$=0.
** Permiss. axial force at $F_R$=0.

## Rotational Sense (Rot. direction interchangeable)

Output:
Worm wheel on hollow shaft

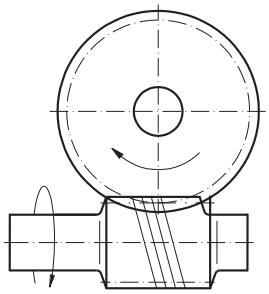

Input:
Worm shaft

## Torque Conversion

Output torque = Input Torque x Efficiency x Transmission

$$\text{Input torque} = \frac{\text{Output torque}}{\text{Efficiency x Ratio}}$$

$$\text{Power } P = \frac{M \times n}{9550}$$

$$\text{Torque } M = \frac{9550 \times P}{n}$$

M = Torque [Nm]
P = Power [kW]
n = Speed [$min^{-1}$]

**Housing:** Aluminium die-cast, with connecting threads on both input and output sides. With mounting holes on all other sides.
**Worm shaft:** hardened and ground.
**Worm Gear:** Bronze, on cast iron hub.
**Lubrication:** synthetic oil (lubricated for life).

Lightweight, high quality model range, 5 sizes, centre distance 31.5, 40, 50, 63 and 75 mm. Size 90 and 110 on request. The gearboxes can be used without ventilation and **independent from the mounting position**.

Output shaft push-in type: The basic gearbox version has a hollow shaft. They can, however, also be supplied with a push in type output shaft (single sided, to be used left and right, or double sided).
These output shafts have their own product No. and have to be ordered separately.

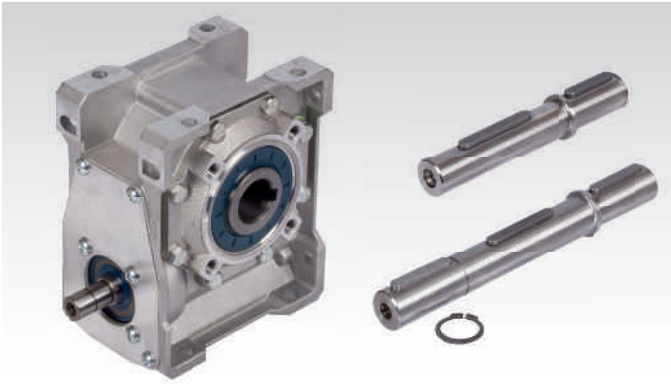

a = Centre distance
i = Ratio
$n_1$, $n_2$ = Input/Output speed
$T_2$ = Output torque
$P_{1\ perm.}$ = Input power
η = Operating efficiency

**Ordering Details: e.g.: Product No., Type, Size, Ratio**
**If required: Output Shaft Single Sided (or Double Sided), Prod No., Size**

| Product No. | a mm | $i_{ist}$ | $n_{1max.}$ $min^{-1}$ | $n_2$ $min^{-1}$ | $T_{2perm.}$ Nm | $P_{1perm.}$ kW | η | Weight kg | Accessories * Product No. Single-Sided Output Shaft | Accessories * Product No. Double-Sided Output Shaft |
|---|---|---|---|---|---|---|---|---|---|---|
| **422 031 07** | 31,5 | 7,5 | 1400 | 187 | 21 | 0,49 | 0,84 | 1,4 | **422 031 01** | **422 031 02** |
| **422 031 10** | 31,5 | 10 | 1400 | 140 | 22 | 0,40 | 0,82 | 1,4 | **422 031 01** | **422 031 02** |
| **422 031 15** | 31,5 | 15 | 1400 | 93 | 22 | 0,28 | 0,77 | 1,4 | **422 031 01** | **422 031 02** |
| **422 031 20** | 31,5 | 20 | 1400 | 70 | 19 | 0,19 | 0,72 | 1,4 | **422 031 01** | **422 031 02** |
| **422 031 25** | 31,5 | 25 | 1400 | 56 | 21 | 0,18 | 0,69 | 1,4 | **422 031 01** | **422 031 02** |
| **422 031 30** | 31,5 | 30 | 1400 | 47 | 20 | 0,15 | 0,66 | 1,4 | **422 031 01** | **422 031 02** |
| **422 031 40** | 31,5 | 40 | 1400 | 35 | 21 | 0,13 | 0,59 | 1,4 | **422 031 01** | **422 031 02** |
| **422 031 50** | 31,5 | 50 | 1400 | 28 | 19 | 0,10 | 0,55 | 1,4 | **422 031 01** | **422 031 02** |
| **422 031 65** | 31,5 | 65 | 1400 | 22 | 20 | 0,09 | 0,51 | 1,4 | **422 031 01** | **422 031 02** |
| **422 031 80** | 31,5 | 80 | 1400 | 18 | 17 | 0,06 | 0,48 | 1,4 | **422 031 01** | **422 031 02** |
| **422 031 11** | 31,5 | 100 | 1400 | 14 | 14 | 0,05 | 0,45 | 1,4 | **422 031 01** | **422 031 02** |
| **422 040 07** | 40 | 7,5 | 1400 | 187 | 40 | 0,92 | 0,85 | 2,4 | **422 040 01** | **422 040 02** |
| **422 040 10** | 40 | 10 | 1400 | 140 | 41 | 0,73 | 0,83 | 2,4 | **422 040 01** | **422 040 02** |
| **422 040 15** | 40 | 15 | 1400 | 93 | 42 | 0,52 | 0,79 | 2,4 | **422 040 01** | **422 040 02** |
| **422 040 20** | 40 | 20 | 1400 | 70 | 40 | 0,39 | 0,76 | 2,4 | **422 040 01** | **422 040 02** |
| **422 040 25** | 40 | 25 | 1400 | 56 | 35 | 0,29 | 0,72 | 2,4 | **422 040 01** | **422 040 02** |
| **422 040 30** | 40 | 30 | 1400 | 47 | 41 | 0,29 | 0,68 | 2,4 | **422 040 01** | **422 040 02** |
| **422 040 40** | 40 | 40 | 1400 | 35 | 38 | 0,22 | 0,64 | 2,4 | **422 040 01** | **422 040 02** |
| **422 040 50** | 40 | 50 | 1400 | 28 | 38 | 0,19 | 0,59 | 2,4 | **422 040 01** | **422 040 02** |
| **422 040 65** | 40 | 65 | 1400 | 22 | 35 | 0,15 | 0,54 | 2,4 | **422 040 01** | **422 040 02** |
| **422 040 80** | 40 | 80 | 1400 | 18 | 33 | 0,12 | 0,52 | 2,4 | **422 040 01** | **422 040 02** |
| **422 040 11** | 40 | 100 | 1400 | 14 | 28 | 0,08 | 0,49 | 2,4 | **422 040 01** | **422 040 02** |
| **422 050 07** | 50 | 7,5 | 1400 | 187 | 70 | 1,60 | 0,86 | 4,0 | **422 050 01** | **422 050 02** |
| **422 050 10** | 50 | 10 | 1400 | 140 | 73 | 1,30 | 0,84 | 4,0 | **422 050 01** | **422 050 02** |
| **422 050 15** | 50 | 15 | 1400 | 93 | 74 | 0,90 | 0,80 | 4,0 | **422 050 01** | **422 050 02** |
| **422 050 20** | 50 | 20 | 1400 | 70 | 75 | 0,71 | 0,78 | 4,0 | **422 050 01** | **422 050 02** |
| **422 050 25** | 50 | 25 | 1400 | 56 | 65 | 0,51 | 0,74 | 4,0 | **422 050 01** | **422 050 02** |
| **422 050 30** | 50 | 30 | 1400 | 47 | 66 | 0,46 | 0,71 | 4,0 | **422 050 01** | **422 050 02** |
| **422 050 40** | 50 | 40 | 1400 | 35 | 69 | 0,38 | 0,67 | 4,0 | **422 050 01** | **422 050 02** |
| **422 050 50** | 50 | 50 | 1400 | 28 | 70 | 0,33 | 0,62 | 4,0 | **422 050 01** | **422 050 02** |
| **422 050 65** | 50 | 65 | 1400 | 22 | 64 | 0,25 | 0,58 | 4,0 | **422 050 01** | **422 050 02** |
| **422 050 80** | 50 | 80 | 1400 | 18 | 60 | 0,20 | 0,54 | 4,0 | **422 050 01** | **422 050 02** |
| **422 050 11** | 50 | 100 | 1400 | 14 | 55 | 0,16 | 0,51 | 4,0 | **422 050 01** | **422 050 02** |
| **422 063 07** | 63 | 7,5 | 1400 | 187 | 120 | 2,70 | 0,87 | 6,6 | **422 063 01** | **422 063 02** |
| **422 063 10** | 63 | 10 | 1400 | 140 | 127 | 2,20 | 0,85 | 6,6 | **422 063 01** | **422 063 02** |
| **422 063 15** | 63 | 15 | 1400 | 93 | 130 | 1,60 | 0,81 | 6,6 | **422 063 01** | **422 063 02** |
| **422 063 20** | 63 | 20 | 1400 | 70 | 144 | 1,30 | 0,80 | 6,6 | **422 063 01** | **422 063 02** |
| **422 063 25** | 63 | 25 | 1400 | 56 | 118 | 0,90 | 0,77 | 6,6 | **422 063 01** | **422 063 02** |
| **422 063 30** | 63 | 30 | 1400 | 47 | 142 | 0,95 | 0,73 | 6,6 | **422 063 01** | **422 063 02** |
| **422 063 40** | 63 | 40 | 1400 | 35 | 150 | 0,79 | 0,69 | 6,6 | **422 063 01** | **422 063 02** |
| **422 063 50** | 63 | 50 | 1400 | 28 | 122 | 0,55 | 0,65 | 6,6 | **422 063 01** | **422 063 02** |
| **422 063 65** | 63 | 65 | 1400 | 22 | 122 | 0,45 | 0,61 | 6,6 | **422 063 01** | **422 063 02** |
| **422 063 80** | 63 | 80 | 1400 | 18 | 113 | 0,36 | 0,58 | 6,6 | **422 063 01** | **422 063 02** |
| **422 063 11** | 63 | 100 | 1400 | 14 | 102 | 0,28 | 0,53 | 6,6 | **422 063 01** | **422 06302** |
| **422 075 07** | 75 | 7,5 | 1400 | 187 | 180 | 4,0 | 0,87 | 11 | **422 075 01** | **422 075 02** |
| **422 075 15** | 75 | 15 | 1400 | 93 | 202 | 2,4 | 0,83 | 11 | **422 075 01** | **422 075 02** |
| **422 075 20** | 75 | 20 | 1400 | 70 | 226 | 2,0 | 0,81 | 11 | **422 075 01** | **422 075 02** |
| **422 075 30** | 75 | 30 | 1400 | 47 | 220 | 1,5 | 0,74 | 11 | **422 075 01** | **422 075 02** |
| **422 075 50** | 75 | 50 | 1400 | 28 | 211 | 0,92 | 0,67 | 11 | **422 075 01** | **422 075 02** |
| **422 075 65** | 75 | 65 | 1400 | 22 | 195 | 0,70 | 0,63 | 11 | **422 075 01** | **422 075 02** |
| **422 075 11** | 75 | 100 | 1400 | 14 | 162 | 0,43 | 0,56 | 11 | **422 075 01** | **422 075 02** |

Dimensions table page 684. For gearbox size 75 , i = 10:1, 25:1, 40:1 and 80:1 available on request.

* More details see page 683.

## Push-In Type Output Shafts, Single Sided

**Material:** Steel.

To change the gearboxes H/I over from hollow shaft to solid shaft. The shaft is only pushed in and secured with the enclosed cover disc and mounting screw. The shaft can be pushed in either left or right.

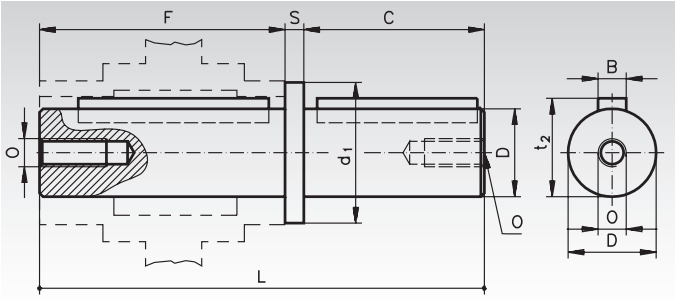


**Ordering details: e.g.: Prod. No. 422 031 01, Push-In Type Output Shaft, Single-Sided, Gearbox Size 031**

| Product No. | Gearbox Size | B mm | C mm | $D^{h6}$ mm | $d_1$ mm | F mm | L mm | O mm | S mm | $t_2$ mm | Weight kg |
|---|---|---|---|---|---|---|---|---|---|---|---|
| **422 031 01** | 031 | 5 | 30 | 14 | 18,5 | 62 | 94,5 | M6x16 | 2,5 | 16,3 | 0,16 |
| **422 040 01** | 040 | 6 | 40 | 18 | 23,5 | 77 | 120,0 | M6x16 | 3,0 | 20,8 | 0,27 |
| **422 050 01** | 050 | 8 | 50 | 25 | 31,5 | 90 | 143,5 | M8x22 | 3,5 | 28,3 | 0,59 |
| **422 063 01** | 063 | 8 | 50 | 25 | 31,5 | 111 | 165,0 | M8x22 | 4,0 | 28,3 | 0,68 |
| **422 075 01** | 075 | 8 | 60 | 28 | 34,5 | 119 | 183,0 | M8x22 | 4,0 | 31,3 | 1,05 |

## Push-In Type Output Shafts, Double Sided

**Material:** Stahl.

To change the gearboxes H/I over from hollow shaft to double-sided solid shaft. The shaft is only pushed in and secured with the enclosed retaining ring.

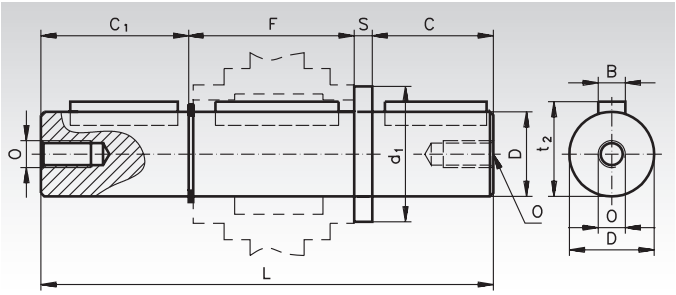


**Ordering details: e.g.: Prod. No. 422 031 02, Push-In Type Output Shaft, Double Sided, Gearbox Size 031**

| Product No. | Gearbox Size | B mm | C mm | $C_1$ mm | $D^{h6}$ mm | $d_1$ mm | F mm | L mm | O mm | S mm | $t_2$ mm | Weight kg |
|---|---|---|---|---|---|---|---|---|---|---|---|---|
| **422 031 02** | 031 | 5 | 30 | 29,0 | 14 | 18,5 | 64,0 | 125,5 | M6x16 | 2,5 | 16,3 | 0,18 |
| **422 040 02** | 040 | 6 | 40 | 38,8 | 18 | 23,5 | 79,2 | 161,0 | M6x16 | 3,0 | 20,8 | 0,32 |
| **422 050 02** | 050 | 8 | 50 | 50,0 | 25 | 31,5 | 93,2 | 196,7 | M8x22 | 3,5 | 28,3 | 0,77 |
| **422 063 02** | 063 | 8 | 50 | 48,8 | 25 | 31,5 | 113,2 | 216,0 | M8x22 | 4,0 | 28,3 | 0,98 |
| **422 075 02** | 075 | 8 | 60 | 58,8 | 28 | 34,5 | 121,0 | 244,0 | M8x22 | 4,0 | 31,3 | 1,49 |

## Permissible Radial and Axial Forces

The values are calculated for the centre of the output shaft end, also calculating in the transmission ratio. $F_R$ is the max. radial force for $F_A = 0$.
$F_A$ is the max. permissible axial force for $F_R = 0$.

| Gearbox Size | i = 7.5 | | i = 10 | | i = 15 | | i = 20 | | i = 25 | | i = 30 | | i = 40 | | i = 50 | | i = 65 | | i = 80 | | i = 100 | |
|---|---|---|---|---|---|---|---|---|---|---|---|---|---|---|---|---|---|---|---|---|---|---|
| | $F_R$ N | $F_A$ N | $F_R$ N | $F_A$ N | $F_R$ N | $F_A$ N | $F_R$ N | $F_A$ N | $F_R$ N | $F_A$ N | $F_R$ N | $F_A$ N | $F_R$ N | $F_A$ N | $F_R$ N | $F_A$ N | $F_R$ N | $F_A$ N | $F_R$ N | $F_A$ N | $F_R$ N | $F_A$ N |
| **031** | 750 | 150 | 775 | 115 | 800 | 160 | 850 | 170 | 900 | 180 | 950 | 190 | 1000 | 200 | 1100 | 220 | 1200 | 240 | 1300 | 260 | 1450 | 290 |
| **040** | 1150 | 230 | 1200 | 240 | 1250 | 250 | 1350 | 270 | 1500 | 300 | 1600 | 320 | 1700 | 340 | 1800 | 360 | 1950 | 390 | 2100 | 420 | 2300 | 460 |
| **050** | 1200 | 240 | 1400 | 280 | 1600 | 320 | 1900 | 380 | 2100 | 420 | 2500 | 500 | 2800 | 560 | 3000 | 600 | 3200 | 640 | 3200 | 640 | 3200 | 640 |
| **063** | 1250 | 250 | 1700 | 340 | 1750 | 350 | 2000 | 400 | 2500 | 500 | 2700 | 540 | 3000 | 600 | 3250 | 650 | 3500 | 700 | 3700 | 740 | 3900 | 780 |
| **075** | 1300 | 260 | 1900 | 380 | 2300 | 460 | 2500 | 500 | 3000 | 600 | 3200 | 640 | 3500 | 700 | 3800 | 760 | 4100 | 820 | 4400 | 880 | 4700 | 940 |

## Lubricant Volume in Litre ($dm^3$)

The gearboxes are lubricated for life using synthetic oil. Under normal operating conditions, no oil change is required. The lubricant volume is identical for all mounting positions.

| Size | 031 | 040 | 050 | 063 | 075 |
|---|---|---|---|---|---|
| Oil quantity | 0.05 | 0.07 | 0.15 | 0.4 | 0.6 |

## Dimensions Table Worm Gear Units H/I

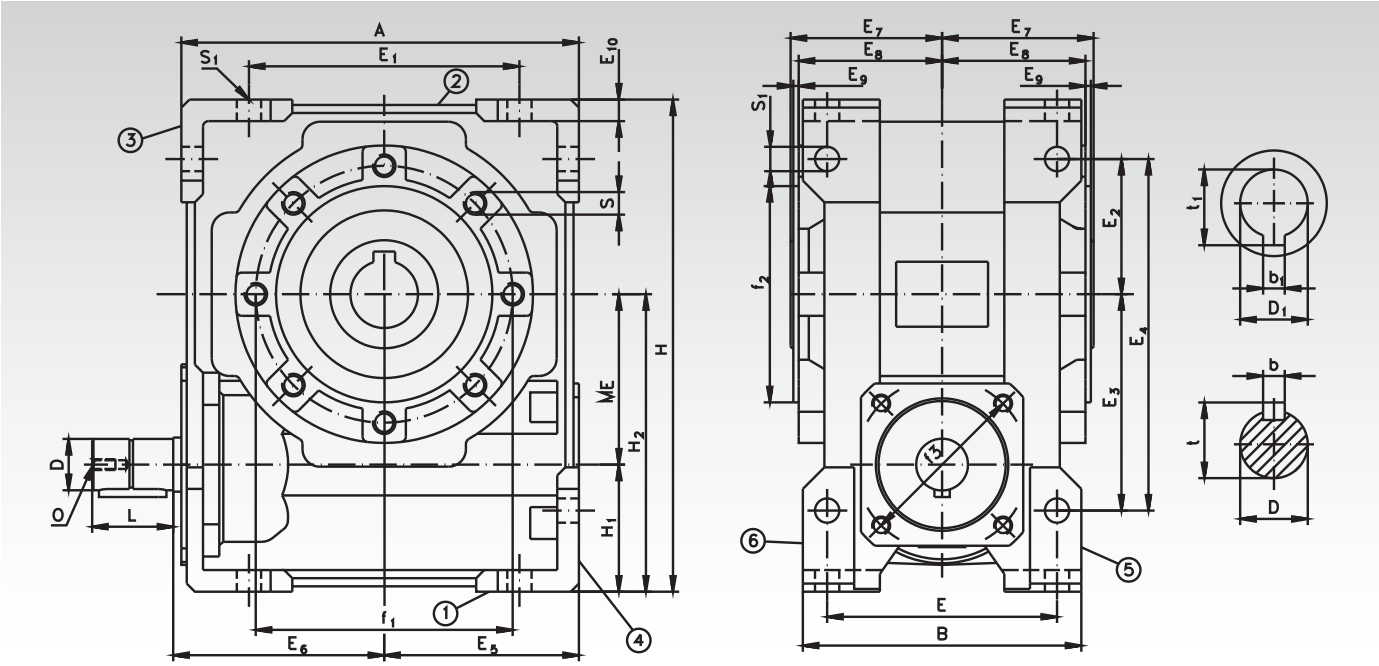


| Size | Centre distance mm | Shaft dimensions $D^{j6}$ mm | b mm | t mm | O mm | $D_1^{H7}$ mm | $b_1$ mm | $t_1$ mm | Housing dimensions A mm | B mm | E mm | $E_1$ mm | $E_2$ mm | $E_3$ mm | $E_4$ mm | $E_5$ mm |
|---|---|---|---|---|---|---|---|---|---|---|---|---|---|---|---|---|
| **031** | 31,5 | 9 | 3 | 10,2 | M4x10 | 14 | 5 | 16,3 | 80 | 56 | 44 | 54 | 27 | 44 | 71 | 40 |
| **040** | 40,0 | 11 | 4 | 12,5 | M4x12 | 18 | 6 | 20,8 | 105 | 71 | 60 | 70 | 35 | 55 | 90 | 50 |
| **050** | 50,0 | 14 | 5 | 16 | M5x13 | 25 | 8 | 28,3 | 125 | 85 | 70 | 80 | 40 | 64 | 104 | 60 |
| **063** | 63,0 | 19 | 6 | 21,5 | M8x20 | 25 | 8 | 28,3 | 147 | 103 | 85 | 100 | 50 | 80 | 130 | 72 |
| **075** | 75,0 | 24 | 8 | 27 | M8x20 | 28 | 8 | 31,3 | 176 | 112 | 90 | 120 | 60 | 93 | 153 | 86 |

| Size | $E_6$ mm | $E_7$ mm | $E_8$ mm | $E_9$ mm | $E_{10}$ mm | $f_1$* mm | $f_2^{h8}$ mm | $f_3$ mm | H mm | $H_1$ mm | $H_2$ mm | L mm | ME mm | S mm | $S_1$ mm | Weight kg |
|---|---|---|---|---|---|---|---|---|---|---|---|---|---|---|---|---|
| **031** | 44,5 | 31,5 | 29,0 | 1,5 | 5,5 | 65 | 55 | 35,4 | 97 | 25,5 | 57 | 15 | 31,5 | M6x8 | 6,5 | 1,4 |
| **040** | 57,5 | 39 | 36,5 | 1,5 | 6,0 | 75 | 60 | 42,4 | 125 | 35 | 75 | 20 | 40,0 | M6x10 | 6,5 | 2,4 |
| **050** | 67,5 | 46 | 43,5 | 1,5 | 7,0 | 85 | 70 | 53,7 | 150 | 40 | 90 | 25 | 50,0 | M8x10 | 8,5 | 4,0 |
| **063** | 77,5 | 56 | 53,0 | 2,0 | 8,0 | 95 | 80 | 60,8 | 182 | 47 | 110 | 30 | 63,0 | M8x14 | 9,0 | 6,6 |
| **075** | 95,0 | 60 | 57,0 | 2,0 | 10 | 115 | 95 | 70,7 | 219,5 | 58,5 | 133,5 | 40 | 75,0 | M8x14 | 11 | 11,1 |

## Mounting Holes on the Drive Side

Size 31: 4 Threads M5
Size 40: 4 Threads M5
Size 50: 4 Threads M6
Size 63: 4 Threads M6
Size 75: 4 Threads M8

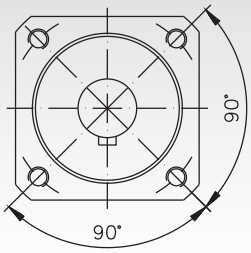


Ø of circle with holes: See size $f_3$ in table.

## Mounting Holes on the Output Side

Size 031
4 Threads M6 x 8

Size 040
4 Threads M6 x 10

Size 050
4 Threads M8 x 10

Size 063 and 075
8 Threads M8 x 14

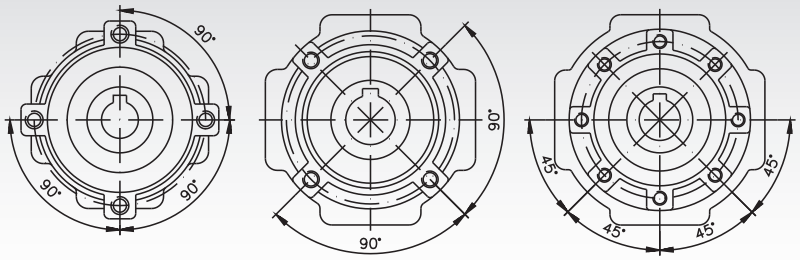


Ø of circle with holes: See size $f_1$ in table.

## Worm Gear Units ZM/I

**General data:** Universal heavy-duty gearboxes.
4 sizes, centre distance 40, 50, 63 and 80 mm.
Centre distance 100 - 315 mm available on request.

**Housing:** High-quality grey cast iron, all sides machined and with mounting holes on 5 sides.

**Gearing:** 13 ratios from 5 to 83 : 1; worm shaft hardened and ground. Worm gear made from special centrifugally cast bronze.

**Efficiency factor:** The efficiency factors stated in the selection tables are guideline values for properly run-in and lubricated gearboxes at operating temperature with nominal load and driving worm shaft. Proper running in is a crucial factor influencing the lifetime of the gearbox. The starting efficiency factor ($\eta_A$) is, as the operating efficiency factor (h), depending on the lead angle.

**Self-locking:** Self-locking only occurs in worm gear units, when the unit cannot be driven from the output side. Worms with 4 and 6 threads sometimes permit transmission ratios for gearing up (i = 5 : 1 to 13.3 : 1). If a gearbox must be implicitly self-locking, or must implicitly not be self-locking, we urge you to contact us.
**Ratio 72:1 is static and dynamic self-locking.**

**Bearing system:** All gearbox shafts with generously dimensioned roller bearings.

**Lubrication:** The gearboxes are lubricated for life using synthetic oil. Under normal operating conditions, no maintenance is required. The housing should be checked for leakages at an interval of approx. 2 years.

**Ventilation:** Size (centre distance) 40 is supplied without ventilation. With the other gearboxes, the sealing plug has to be exchanged with the separately packed venting filter.

Version A

Version HL

### Venting Filter (VF)

| Size | A mm | B mm | C mm | D mm | E mm | F mm |
|---|---|---|---|---|---|---|
| **40*** | - | - | - | - | - | - |
| **50** | 50 | 20 | 33 | 22 | 58 | 25 |
| **63** | 62,5 | 27,5 | 37 | 22 | 67 | 25 |
| **80** | 77,5 | 32,5 | 57 | 22 | 82 | 25 |

* Size 40 without Ventilation.

### Lubrication Volume in Litre ($dm^3$)

| Size | Mounting Position 1 | 2 | 3 + 4 | 5 + 6 |
|---|---|---|---|---|
| **40** | 0,20 | 0,25 | 0,20 | 0,20 |
| **50** | 0,30 | 0,60 | 0,45 | 0,45 |
| **63** | 0,50 | 1,10 | 0,70 | 0,80 |
| **80** | 0,90 | 2,10 | 1,40 | 1,60 |

The standard lubrication volume is calculated for mounting position 2. For other mounting positions and high permanent speeds it might have to be reduced, to avoid oil leakages.

### Position of the Oil Fittings Size 50 - 80

Mounting Position 1

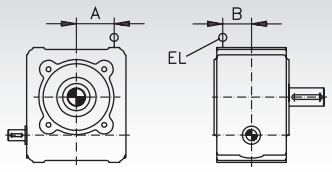


Mounting Position 2

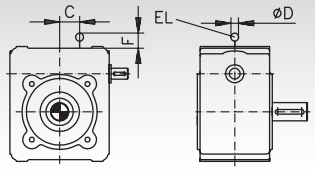


Mounting Position 3

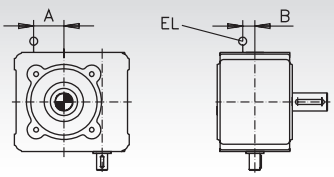


Mounting Position 4

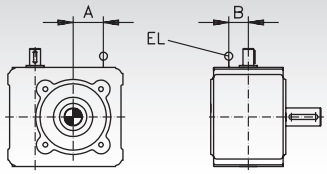


Mounting Position 5

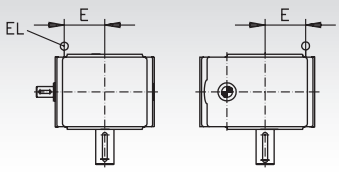


Mounting Position 6

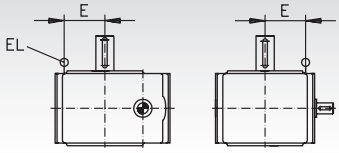


### Mounting Sides

The worm gear units can be mounted in any position and the shaft ends can be positioned to your requirements.

Sizes 40 - 80

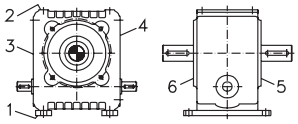

The input power $P_{1\ perm}$ and output torques $T_{2\ perm}$ listed in the selection tables are based on shock-free continuous operation, an operating time of 8 hours/day, 3 starts per hour, operating time (OT) = 100% and 20°C ambient temperature. The maximum output torques $T_{2max}$ may frequently be reached in short-term load peaks but they must not be exceeded. With an operating time under 90%, the permissible gearbox output can usually be increased.

$i_n$, $i_{ist}$ = nominal ratio, real ratio.
$n_1$, $n_2$ [$min^{-1}$] = input speed, output speed.
$P_{1\ perm}$ [kW] = permittable input power.
$T_{2\ perm}$ [Nm] = permittable output torque (permanent).
$T_{2max}$ [Nm] = maximum output torque (peak).
η = operating efficiency.

**Dimensions Table Page 690.**

Version with foot mounting brackets or shafts on both sides on request.

| Version A Output Side 5 Product No. | Version A Output Side 6 Product No. | Version HL Hollow Shaft Product No. | Ratio i = | $n_1$ $min^{-1}$ | $n_2$ $min^{-1}$ | $P_{1\ perm}$ kW | $T_{2\ perm}$ Nm | $T_{2max}$ Nm | η |
|---|---|---|---|---|---|---|---|---|---|
| **421 001 00** | **421 001 01** | **421 003 00** | 4,83 : 1 | 1500 | 300 | 1,77 | 52 | 73 | 0,94 |
| | | | *29/6 | 1000 | 200 | 1,24 | 54 | 73 | 0,94 |
| | | | | 500 | 100 | 0,69 | 59 | 73 | 0,91 |
| | | | | 10 | 2 | 0,02 | 73 | 73 | 0,86 |
| **421 001 02** | **421 001 03** | **421 003 01** | 7,25 : 1 | 1500 | 200 | 1,29 | 55 | 83 | 0,92 |
| | | | *29/4 | 1000 | 133 | 0,91 | 57 | 83 | 0,91 |
| | | | | 500 | 67 | 0,50 | 62 | 83 | 0,88 |
| | | | | 10 | 1,3 | 0,01 | 83 | 83 | 0,82 |
| **421 001 04** | **421 001 05** | **421 003 02** | 9,75 : 1 | 1500 | 150 | 0,77 | 43 | 77 | 0,90 |
| | | | *39/4 | 1000 | 100 | 0,55 | 45 | 77 | 0,89 |
| | | | | 500 | 50 | 0,32 | 50 | 77 | 0,87 |
| | | | | 10 | 1 | 0,01 | 70 | 77 | 0,82 |
| **421 001 06** | **421 001 07** | **421 003 03** | 13,0 : 1 | 1500 | 113 | 0,45 | 32 | 67 | 0,87 |
| | | | *52/4 | 1000 | 75 | 0,32 | 34 | 67 | 0,86 |
| | | | | 500 | 38 | 0,18 | 39 | 67 | 0,85 |
| | | | | 10 | 0,75 | 0,01 | 55 | 67 | 0,82 |
| **421 001 08** | **421 001 09** | **421 003 04** | 14,5 : 1 | 1500 | 100 | 0,77 | 61 | 97 | 0,86 |
| | | | *29/2 | 1000 | 67 | 0,54 | 63 | 97 | 0,84 |
| | | | | 500 | 33 | 0,32 | 72 | 97 | 0,80 |
| | | | | 10 | 0,67 | 0,01 | 97 | 97 | 0,73 |
| **421 001 10** | **421 001 11** | **421 003 05** | 19,5 : 1 | 1500 | 75 | 0,49 | 50 | 90 | 0,83 |
| | | | *39/2 | 1000 | 50 | 0,35 | 53 | 90 | 0,86 |
| | | | | 500 | 25 | 0,20 | 58 | 90 | 0,78 |
| | | | | 10 | 0,5 | 0,01 | 82 | 90 | 0,72 |
| **421 001 12** | **421 001 13** | **421 003 06** | 26,0 : 1 | 1500 | 57 | 0,29 | 38 | 80 | 0,80 |
| | | | *52/2 | 1000 | 38 | 0,21 | 40 | 80 | 0,77 |
| | | | | 500 | 19 | 0,12 | 45 | 80 | 0,75 |
| | | | | 10 | 0,38 | 0,004 | 65 | 80 | 0,72 |
| **421 001 14** | **421 001 15** | **421 003 07** | 29,0 : 1 | 1500 | 50 | 0,45 | 63 | 107 | 0,75 |
| | | | *29/1 | 1000 | 33 | 0,33 | 65 | 107 | 0,72 |
| | | | | 500 | 17 | 0,20 | 75 | 107 | 0,67 |
| | | | | 10 | 0,33 | 0,01 | 107 | 107 | 0,58 |
| **421 001 16** | **421 001 17** | **421 003 08** | 39,0 : 1 | 1500 | 38 | 0,34 | 61 | 99 | 0,72 |
| | | | *39/1 | 1000 | 25 | 0,25 | 64 | 99 | 0,69 |
| | | | | 500 | 13 | 0,15 | 71 | 99 | 0,65 |
| | | | | 10 | 0,25 | 0,005 | 99 | 99 | 0,58 |
| **421 001 18** | **421 001 19** | **421 003 09** | 52,0 : 1 | 1500 | 28 | 0,21 | 46 | 88 | 0,66 |
| | | | *52/1 | 1000 | 19 | 0,15 | 48 | 88 | 0,65 |
| | | | | 500 | 9,4 | 0,09 | 55 | 88 | 0,62 |
| | | | | 10 | 0,19 | 0,003 | 74 | 88 | 0,58 |
| **421 001 20** | **421 001 21** | **421 003 10** | 63,0 : 1 | 1500 | 24 | 0,20 | 48 | 72 | 0,60 |
| | | | *63/1 | 1000 | 16 | 0,15 | 51 | 72 | 0,58 |
| | | | | 500 | 8,1 | 0,09 | 56 | 72 | 0,54 |
| | | | | 10 | 0,16 | 0,002 | 57 | 72 | 0,48 |
| **421 001 24** | **421 001 25** | **421 003 12** | 72,0 : 1 | 1500 | 21 | 0,18 | 46 | 62 | 0,55 |
| | | | *72/1 | 1000 | 14 | 0,13 | 46 | 62 | 0,52 |
| | | | | 500 | 6,9 | 0,07 | 46 | 62 | 0,47 |
| | | | | 10 | 0,14 | 0,002 | 46 | 62 | 0,41 |
| **421 001 26**[1)] | **421 001 27**[1)] | **421 003 13**[1)] | 72,0 : 1 | 100 | 1,39 | 0,02 | 46 | 62 | 0,44 |
| | | | *72/1 optimized | 10 | 0,14 | 0,002 | 46 | 62 | 0,41 |
| | | | for manual operation[1)] | | | | | | |
| **421 001 22** | **421 001 23** | **421 003 11** | 82,0 : 1 | 1500 | 18 | 0,13 | 37 | 64 | 0,54 |
| | | | *82/1 | 1000 | 12 | 0,09 | 38 | 64 | 0,52 |
| | | | | 500 | 6 | 0,05 | 38 | 64 | 0,49 |
| | | | | 10 | 0,12 | 0,001 | 38 | 64 | 0,46 |

* Example: Worm gear number of teeth 29 / worm shaft 6 threads.

[1)] This implicity self-locking version is optimezed for hand operation (special worm surface and special oil).

## Worm Gear Units ZM/I, Technical Data, Size 50

The input power $P_{1\ perm}$ and output torques $T_{2\ perm}$ listed in the selection tables are based on shock-free continuous operation, an operating time of 8 hours/day, 3 starts per hour, operating time (OT) = 100% and 20°C ambient temperature. The maximum output torques $T_{2max}$ may frequently be reached in short-term load peaks but they must not be exceeded. With an operating time under 90%, the permissible gearbox output can usually be increased.

$i_n$, $i_{ist}$ = nominal ratio, real ratio.
$n_1$, $n_2$ [$min^{-1}$] = input speed, output speed.
$P_{1\ perm}$ [kW] = permittable input power.
$T_{2\ perm}$ [Nm] = permittable output torque (permanent).
$T_{2max}$ [Nm] = maximum output torque (peak).
$\eta$ = operating efficiency.

**Dimensions Table Page 690.**

Version with foot mounting brackets or shafts on both sides on request.

| Version A Output Side 5 Product No. | Version A Output Side 6 Product No. | Version HL Hollow Shaft Product No. | Ratio i = | $n_1$ $min^{-1}$ | $n_2$ $min^{-1}$ | $P_{1\ perm}$ kW | $T_{2\ perm}$ Nm | $T_{2max}$ Nm | $\eta$ |
|---|---|---|---|---|---|---|---|---|---|
| **421 011 00** | **421 011 01** | **421 013 00** | 4,83 : 1 | 1500 | 300 | 3,71 | 109 | 144 | 0,95 |
| | | | *29/6 | 1000 | 200 | 2,58 | 113 | 144 | 0,95 |
| | | | | 500 | 100 | 1,40 | 120 | 144 | 0,93 |
| | | | | 10 | 2 | 0,04 | 144 | 144 | 0,86 |
| **421 011 02** | **421 011 03** | **421 013 01** | 7,25 : 1 | 1500 | 200 | 2,60 | 113 | 164 | 0,94 |
| | | | *29/4 | 1000 | 133 | 1,82 | 117 | 164 | 0,93 |
| | | | | 500 | 67 | 1,00 | 125 | 164 | 0,90 |
| | | | | 10 | 1,3 | 0,03 | 164 | 164 | 0,83 |
| **421 011 04** | **421 011 05** | **421 013 02** | 9,5 : 1 | 1500 | 150 | 1,62 | 91 | 150 | 0,92 |
| | | | *38/4 | 1000 | 100 | 1,14 | 94 | 150 | 0,91 |
| | | | | 500 | 50 | 0,63 | 102 | 150 | 0,88 |
| | | | | 10 | 1 | 0,02 | 139 | 150 | 0,82 |
| **421 011 06** | **421 011 07** | **421 013 03** | 12,75 : 1 | 1500 | 113 | 0,82 | 60 | 107 | 0,89 |
| | | | *51/4 | 1000 | 75 | 0,58 | 62 | 107 | 0,88 |
| | | | | 500 | 38 | 0,32 | 67 | 107 | 0,86 |
| | | | | 10 | 0,75 | 0,01 | 107 | 107 | 0,82 |
| **421 011 08** | **421 011 09** | **421 013 04** | 14,5 : 1 | 1500 | 100 | 1,57 | 128 | 194 | 0,88 |
| | | | *29/2 | 1000 | 67 | 1,13 | 136 | 194 | 0,86 |
| | | | | 500 | 33 | 0,63 | 145 | 194 | 0,83 |
| | | | | 10 | 0,67 | 0,02 | 194 | 194 | 0,74 |
| **421 011 10** | **421 011 11** | **421 013 05** | 19,0 : 1 | 1500 | 75 | 1,02 | 106 | 176 | 0,86 |
| | | | *38/2 | 1000 | 50 | 0,72 | 110 | 176 | 0,84 |
| | | | | 500 | 25 | 0,41 | 119 | 176 | 0,80 |
| | | | | 10 | 0,5 | 0,01 | 164 | 176 | 0,73 |
| **421 011 12** | **421 011 13** | **421 013 06** | 25,5 : 1 | 1500 | 57 | 0,57 | 77 | 140 | 0,82 |
| | | | *51/2 | 1000 | 38 | 0,41 | 80 | 140 | 0,80 |
| | | | | 500 | 19 | 0,23 | 87 | 140 | 0,77 |
| | | | | 10 | 0,38 | 0,01 | 134 | 140 | 0,72 |
| **421 011 14** | **421 011 15** | **421 013 07** | 29,0 : 1 | 1500 | 50 | 0,87 | 126 | 215 | 0,78 |
| | | | *29/1 | 1000 | 33 | 0,70 | 148 | 215 | 0,70 |
| | | | | 500 | 17 | 0,45 | 176 | 215 | 0,71 |
| | | | | 10 | 0,33 | 0,01 | 215 | 215 | 0,60 |
| **421 011 16** | **421 011 17** | **421 013 08** | 38,0 : 1 | 1500 | 38 | 0,76 | 128 | 194 | 0,76 |
| | | | *38/1 | 1000 | 25 | 0,51 | 134 | 194 | 0,73 |
| | | | | 500 | 13 | 0,29 | 145 | 194 | 0,68 |
| | | | | 10 | 0,25 | 0,01 | 194 | 194 | 0,58 |
| **421 011 18** | **421 011 19** | **421 013 09** | 51,0 : 1 | 1500 | 28 | 0,37 | 84 | 156 | 0,70 |
| | | | *51/1 | 1000 | 19 | 0,27 | 88 | 156 | 0,68 |
| | | | | 500 | 9,4 | 0,15 | 96 | 156 | 0,64 |
| | | | | 10 | 0,19 | 0,01 | 154 | 156 | 0,58 |
| **421 011 20** | **421 011 21** | **421 013 10** | 62,0 : 1 | 1500 | 24 | 0,41 | 105 | 139 | 0,65 |
| | | | *62/1 | 1000 | 16 | 0,30 | 109 | 139 | 0,62 |
| | | | | 500 | 8,1 | 0,17 | 113 | 139 | 0,56 |
| | | | | 10 | 0,16 | 0,004 | 113 | 139 | 0,47 |
| **421 011 24** | **421 011 25** | **421 013 12** | 72,0 : 1 | 1500 | 21 | 0,32 | 86 | 121 | 0,59 |
| | | | *72/1 | 1000 | 14 | 0,22 | 86 | 121 | 0,56 |
| | | | | 500 | 6,9 | 0,12 | 86 | 121 | 0,50 |
| | | | | 10 | 0,14 | 0,004 | 86 | 121 | 0,41 |
| **421 011 26**[1)] | **421 011 27**[1)] | **421 013 13**[1)] | 72,0 : 1 | 100 | 1,38 | 0,04 | 86 | 121 | 0,46 |
| | | | *72/1 optimized for manual operation[1)] | 10 | 0,14 | 0,004 | 86 | 121 | 0,41 |
| **421 011 22** | **421 011 23** | **421 013 11** | 83,0 : 1 | 1500 | 18 | 0,20 | 61 | 114 | 0,57 |
| | | | *83/1 | 1000 | 12 | 0,14 | 64 | 114 | 0,56 |
| | | | | 500 | 6 | 0,08 | 69 | 114 | 0,52 |
| | | | | 10 | 0,12 | 0,002 | 75 | 114 | 0,47 |

* Example: Worm gear number of teeth 29 / worm shaft 6 threads.

[1)] This implicity self-locking version is optimezed for hand operation (special worm surface and special oil).

The input power $P_{1\ perm}$ and output torques $T_{2\ perm}$ listed in the selection tables are based on shock-free continuous operation, an operating time of 8 hours/day, 3 starts per hour, operating time (OT) = 100% and 20°C ambient temperature. The maximum output torques $T_{2max}$ may frequently be reached in short-term load peaks but they must not be exceeded. With an operating time under 90%, the permissible gearbox output can usually be increased.

$i_n$, $i_{ist}$ = nominal ratio, real ratio.
$n_1$, $n_2$ [$min^{-1}$] = input speed, output speed.
$P_{1\ perm}$ [kW] = permittable input power.
$T_{2\ perm}$ [Nm] = permittable output torque (permanent).
$T_{2max}$ [Nm] = maximum output torque (peak).
$\eta$ = operating efficiency.

**Dimensions Table Page 690.**

Version with foot mounting brackets or shafts on both sides on request.

| Version A Output Side 5 Product No. | Version A Output Side 6 Product No. | Version HL Hollow Shaft Product No. | Ratio i = | $n_1$ $min^{-1}$ | $n_2$ $min^{-1}$ | $P_{1\ perm}$ kW | $T_{2\ perm}$ Nm | $T_{2max}$ Nm | $\eta$ |
|---|---|---|---|---|---|---|---|---|---|
| **421 021 00** | **421 021 01** | **421 023 00** | 4,83 : 1 | 1500 | 300 | 5,87 | 174 | 288 | 0,96 |
| | | | *29/6 | 1000 | 200 | 4,25 | 188 | 288 | 0,95 |
| | | | | 500 | 100 | 2,57 | 223 | 288 | 0,94 |
| | | | | 10 | 2 | 0,07 | 288 | 288 | 0,86 |
| **421 021 02** | **421 021 03** | **421 023 01** | 7,25 : 1 | 1500 | 200 | 4,44 | 194 | 328 | 0,95 |
| | | | *29/4 | 1000 | 133 | 3,17 | 206 | 328 | 0,94 |
| | | | | 500 | 67 | 1,93 | 244 | 328 | 0,91 |
| | | | | 10 | 1,3 | 0,06 | 328 | 328 | 0,83 |
| **421 021 04** | **421 021 05** | **421 023 02** | 9,75 : 1 | 1500 | 150 | 3,35 | 195 | 301 | 0,94 |
| | | | *39/4 | 1000 | 100 | 2,35 | 203 | 301 | 0,93 |
| | | | | 500 | 50 | 1,29 | 216 | 301 | 0,90 |
| | | | | 10 | 1 | 0,04 | 289 | 301 | 0,83 |
| **421 021 06** | **421 021 07** | **421 023 03** | 12,75 : 1 | 1500 | 113 | 1,81 | 135 | 243 | 0,92 |
| | | | *51/4 | 1000 | 75 | 1,28 | 142 | 243 | 0,91 |
| | | | | 500 | 38 | 0,71 | 152 | 243 | 0,88 |
| | | | | 10 | 0,75 | 0,02 | 239 | 243 | 0,82 |
| **421 021 08** | **421 021 09** | **421 023 04** | 14,5 : 1 | 1500 | 100 | 2,24 | 186 | 387 | 0,89 |
| | | | *29/2 | 1000 | 67 | 1,78 | 217 | 387 | 0,88 |
| | | | | 500 | 33 | 1,14 | 268 | 387 | 0,84 |
| | | | | 10 | 0,67 | 0,04 | 387 | 387 | 0,74 |
| **421 021 10** | **421 021 11** | **421 023 05** | 19,5 : 1 | 1500 | 75 | 2,00 | 220 | 355 | 0,88 |
| | | | *39/2 | 1000 | 50 | 1,46 | 235 | 355 | 0,87 |
| | | | | 500 | 25 | 0,82 | 252 | 355 | 0,83 |
| | | | | 10 | 0,5 | 0,02 | 339 | 355 | 0,74 |
| **421 021 12** | **421 021 13** | **421 023 06** | 25,5 : 1 | 1500 | 57 | 1,25 | 174 | 314 | 0,86 |
| | | | *51/2 | 1000 | 38 | 0,89 | 182 | 314 | 0,84 |
| | | | | 500 | 19 | 0,50 | 197 | 314 | 0,80 |
| | | | | 10 | 0,38 | 0,02 | 281 | 314 | 0,73 |
| **421 021 14** | **421 021 15** | **421 023 07** | 29,0 : 1 | 1500 | 50 | 1,22 | 183 | 429 | 0,81 |
| | | | *29/1 | 1000 | 33 | 0,99 | 215 | 429 | 0,79 |
| | | | | 500 | 17 | 0,67 | 274 | 429 | 0,73 |
| | | | | 10 | 0,33 | 0,03 | 429 | 429 | 0,60 |
| **421 021 16** | **421 021 17** | **421 023 08** | 39,0 : 1 | 1500 | 38 | 1,11 | 217 | 393 | 0,79 |
| | | | *39/1 | 1000 | 25 | 0,89 | 255 | 393 | 0,76 |
| | | | | 500 | 13 | 0,58 | 305 | 393 | 0,71 |
| | | | | 10 | 0,25 | 0,02 | 393 | 393 | 0,60 |
| **421 021 18** | **421 021 19** | **421 023 09** | 51,0 : 1 | 1500 | 28 | 0,78 | 191 | 346 | 0,75 |
| | | | *51/1 | 1000 | 19 | 0,57 | 201 | 346 | 0,73 |
| | | | | 500 | 9,4 | 0,33 | 218 | 346 | 0,68 |
| | | | | 10 | 0,19 | 0,01 | 298 | 346 | 0,58 |
| **421 021 20** | **421 021 21** | **421 023 10** | 61,0 : 1 | 1500 | 24 | 0,78 | 211 | 281 | 0,70 |
| | | | *61/1 | 1000 | 16 | 0,58 | 226 | 281 | 0,67 |
| | | | | 500 | 8,1 | 0,32 | 226 | 281 | 0,60 |
| | | | | 10 | 0,16 | 0,01 | 226 | 281 | 0,47 |
| **421 021 24** | **421 021 25** | **421 023 12** | 72,0 : 1 | 1500 | 21 | 0,60 | 176 | 235 | 0,64 |
| | | | *72/1 | 1000 | 14 | 0,43 | 176 | 235 | 0,60 |
| | | | | 500 | 6,9 | 0,24 | 176 | 235 | 0,53 |
| | | | | 10 | 0,14 | 0,01 | 176 | 235 | 0,39 |
| **421 021 26**[1)] | **421 021 27**[1)] | **421 023 13**[1)] | 72,0 : 1 | 100 | 1,38 | 0,09 | 176 | 235 | 0,41 |
| | | | *72/1 optimized for manual operation[1)] | 10 | 0,14 | 0,01 | 176 | 235 | 0,39 |
| **421 021 22** | **421 021 23** | **421 023 11** | 82,0 : 1 | 1500 | 18 | 0,45 | 152 | 247 | 0,64 |
| | | | *82/1 | 1000 | 12 | 0,32 | 152 | 247 | 0,61 |
| | | | | 500 | 6 | 0,17 | 152 | 247 | 0,56 |
| | | | | 10 | 0,12 | 0,004 | 152 | 247 | 0,46 |

* Example: Worm gear number of teeth 29 / worm shaft 6 threads.

[1)] This implicity self-locking version is optimezed for hand operation (special worm surface and special oil).

## Worm Gear Units ZM/I, Technical Data, Size 80

The input power $P_{1permiss.}$ and output torques $T_{2permiss.}$ listed in the selection tables are based on shock-free continuous operation, an operating time of 8 hours/day, 3 starts per hour, operating time (OT) = 100% and 20°C ambient temperature. The maximum output torques $T_{2max}$ may frequently be reached in short-term load peaks but they must not be exceeded. With an operating time under 90%, the permissible gearbox output can usually be increased.

$i_n$, $i_{ist}$ = nominal ratio, real ratio.
$n_1$, $n_2$ [$min^{-1}$] = input speed, output speed.
$P_{1\ perm}$ [kW] = permittable input power.
$T_{2\ perm}$ [Nm] = permittable output torque (permanent).
$T_{2max}$ [Nm] = maximum output torque (peak).
η = operating efficiency.

**Dimensions Table Page 690.**

Version with foot mounting brackets or shafts on both sides on request.

| Version A Output Side 5 Product No. | Version A Output Side 6 Product No. | Version HL Hollow Shaft Product No. | Ratio i = | $n_1$ $min^{-1}$ | $n_2$ $min^{-1}$ | $P_{1\ perm}$ kW | $T_{2\ perm}$ Nm | $T_{2max}$ Nm | η |
|---|---|---|---|---|---|---|---|---|---|
| **421 031 00** | **421 031 01** | **421 033 00** | 5,0 : 1 | 1500 | 300 | 9,82 | 303 | 597 | 0,97 |
| | | | *30/6 | 1000 | 200 | 7,16 | 329 | 597 | 0,96 |
| | | | | 500 | 100 | 4,40 | 399 | 597 | 0,95 |
| | | | | 10 | 2 | 0,14 | 597 | 597 | 0,87 |
| **421 031 02** | **421 031 03** | **421 033 01** | 7,5 : 1 | 1500 | 200 | 7,22 | 330 | 681 | 0,96 |
| | | | *30/4 | 1000 | 133 | 5,35 | 364 | 681 | 0,95 |
| | | | | 500 | 67 | 3,31 | 441 | 681 | 0,93 |
| | | | | 10 | 1,3 | 0,11 | 681 | 681 | 0,84 |
| **421 031 04** | **421 031 05** | **421 033 02** | 10,0 : 1 | 1500 | 150 | 6,17 | 373 | 613 | 0,94 |
| | | | *40/4 | 1000 | 100 | 4,35 | 391 | 613 | 0,94 |
| | | | | 500 | 50 | 2,70 | 473 | 613 | 0,92 |
| | | | | 10 | 1 | 0,08 | 613 | 613 | 0,83 |
| **421 031 06** | **421 031 07** | **421 033 03** | 13,25 : 1 | 1500 | 113 | 2,40 | 188 | 335 | 0,93 |
| | | | *53/4 | 1000 | 75 | 1,69 | 197 | 335 | 0,92 |
| | | | | 500 | 38 | 0,93 | 212 | 335 | 0,89 |
| | | | | 10 | 0,75 | 0,03 | 335 | 335 | 0,83 |
| **421 031 08** | **421 031 09** | **421 033 04** | 15,0 : 1 | 1500 | 100 | 3,59 | 313 | 810 | 0,91 |
| | | | *30/2 | 1000 | 67 | 2,86 | 370 | 810 | 0,90 |
| | | | | 500 | 33 | 1,83 | 455 | 810 | 0,87 |
| | | | | 10 | 0,67 | 0,08 | 810 | 810 | 0,75 |
| **421 031 10** | **421 031 11** | **421 033 05** | 20,0 : 1 | 1500 | 75 | 3,11 | 356 | 725 | 0,90 |
| | | | *40/2 | 1000 | 50 | 2,46 | 416 | 725 | 0,89 |
| | | | | 500 | 25 | 1,59 | 518 | 725 | 0,85 |
| | | | | 10 | 0,5 | 0,05 | 725 | 725 | 0,74 |
| **421 031 12** | **421 031 13** | **421 033 06** | 26,5 : 1 | 1500 | 57 | 1,67 | 245 | 444 | 0,87 |
| | | | *53/2 | 1000 | 38 | 1,18 | 257 | 444 | 0,86 |
| | | | | 500 | 19 | 0,67 | 277 | 444 | 0,82 |
| | | | | 10 | 0,38 | 0,03 | 444 | 444 | 0,73 |
| **421 031 14** | **421 031 15** | **421 033 07** | 30,0 : 1 | 1500 | 50 | 1,92 | 308 | 878 | 0,84 |
| | | | *30/1 | 1000 | 33 | 1,55 | 364 | 878 | 0,82 |
| | | | | 500 | 17 | 1,03 | 454 | 878 | 0,77 |
| | | | | 10 | 0,33 | 0,04 | 878 | 878 | 0,60 |
| **421 031 16** | **421 031 17** | **421 033 08** | 40,0 : 1 | 1500 | 38 | 1,69 | 350 | 802 | 0,81 |
| | | | *40/1 | 1000 | 25 | 1,36 | 411 | 802 | 0,79 |
| | | | | 500 | 13 | 0,74 | 519 | 802 | 0,74 |
| | | | | 10 | 0,25 | 0,04 | 802 | 802 | 0,60 |
| **421 031 18** | **421 031 19** | **421 033 09** | 53,0 : 1 | 1500 | 28 | 1,04 | 271 | 501 | 0,78 |
| | | | *53/1 | 1000 | 19 | 0,75 | 285 | 501 | 0,75 |
| | | | | 500 | 9,4 | 0,43 | 309 | 501 | 0,70 |
| | | | | 10 | 0,19 | 0,02 | 501 | 501 | 0,59 |
| **421 031 20** | **421 031 21** | **421 033 10** | 62,0 : 1 | 1500 | 24 | 1,16 | 333 | 570 | 0,73 |
| | | | *62/1 | 1000 | 16 | 0,94 | 393 | 570 | 0,70 |
| | | | | 500 | 8,1 | 0,60 | 448 | 570 | 0,63 |
| | | | | 10 | 0,16 | 0,02 | 448 | 570 | 0,47 |
| **421 031 24** | **421 031 25** | **421 033 12** | 72,0 : 1 | 1500 | 21 | 1,00 | 314 | 498 | 0,69 |
| | | | *72/1 | 1000 | 14 | 0,82 | 370 | 498 | 0,66 |
| | | | | 500 | 6,9 | 0,46 | 370 | 498 | 0,58 |
| | | | | 10 | 0,14 | 0,02 | 370 | 498 | 0,41 |
| **421 031 26**[1)] | **421 031 27**[1)] | **421 033 13**[1)] | 72,0 : 1 | 100 | 1,38 | 0,18 | 370 | 498 | 0,50 |
| | | | *72/1 optimized for manual operation[1)] | 10 | 0,14 | 0,02 | 370 | 498 | 0,41 |
| **421 031 22** | **421 031 23** | **421 033 11** | 82,0 : 1 | 1500 | 18 | 0,84 | 304 | 510 | 0,69 |
| | | | *82/1 | 1000 | 12 | 0,59 | 304 | 510 | 0,66 |
| | | | | 500 | 6 | 0,33 | 304 | 510 | 0,60 |
| | | | | 10 | 0,12 | 0,01 | 304 | 510 | 0,47 |

* Example: Worm gear number of teeth 30 / worm shaft 6 threads.

[1)] This implicity self-locking version is optimezed for hand operation (special worm surface and special oil).

## Dimensions Table Worm Gear Units ZM/I

The sides 1 to 6 are machined and can be used as mounting surfaces. The foot mounting brackets F can be connected to the sides 1 and 2.

(1) The sides 1, 2, 3, 5 and 6 are ex-works always supplied with threaded bores.

If side 4 is to be used as mounting surface, the respective surface is supplied with threaded bores. The worm shaft end can be fitted on side 3 or 4 as desired. Shaft end with thread alignment according to DIN 332/page 2, feather keys and grooves according to DIN 6885/1. Position of the venting filter according to the table on page 685. The gearbox can function in any mounting position.

Version with foot mounting bracket or double-sided output shaft on request.

**Version A**

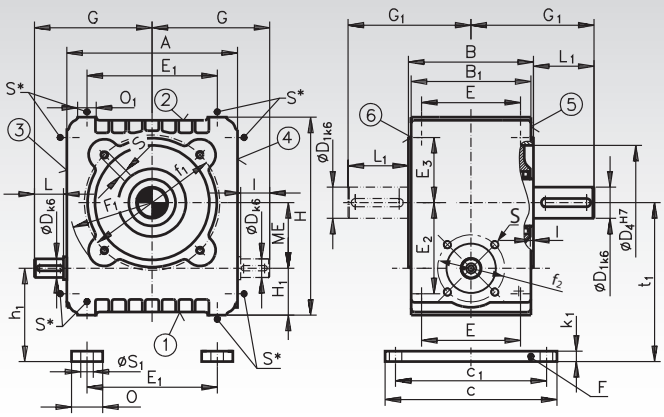


**Version HL**

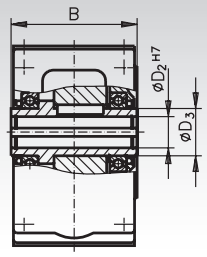


## Gearbox Dimensions

| Size | ME | A mm | B mm | $B_1$ mm | c mm | $c_1$ mm | $D_4$ mm | D x L mm | $D_1$ x $L_1$ mm | $D_2$ mm | $D_3$ mm | E mm | $E_1$ mm | $E_2$* mm | $E_3$* mm | $F_1$ mm |
|---|---|---|---|---|---|---|---|---|---|---|---|---|---|---|---|---|
| **40** | 40 | 104 | 90 | 85 | 125 | 110 | 70 | 14 x 24 | 22 x 36 | 22 | 35 | 70 | 70 | 55 | 35 | 53 |
| **50** | 50 | 140 | 105 | 100 | 150 | 130 | 90 | 16 x 28 | 25 x 42 | 25 | 40 | 80 | 100 | 70 | 50 | 65 |
| **63** | 63 | 164 | 120 | 115 | 165 | 145 | 110 | 18 x 28 | 30 x 58 | 30 | 45 | 95 | 125 | 87,5 | 62,5 | 80 |
| **80** | 80 | 204 | 140 | 135 | 190 | 165 | 140 | 24 x 36 | 38 x 58 | 38 | 55 | 115 | 155 | 107,5 | 77,5 | 100 |

| Size | $f_1$ mm | $f_2$ mm | G mm | $G_1$ mm | $H_1$ mm | $h_1$ mm | H mm | I mm | $k_1$ mm | O mm | $O_1$ mm | S* mm | $S_1$ mm | $t_1$ mm | Weight g |
|---|---|---|---|---|---|---|---|---|---|---|---|---|---|---|---|
| **40** | 85 | 50 | 79 | 81 | 32 | 40 | 124 | 3 | 8 | 25 | 14 | M6 x 12 | 10 | 80 | 7 |
| **50** | 110 | 64 | 100 | 94,5 | 40 | 50 | 160 | 3 | 10 | 30 | 18 | M8 x 14 | 12 | 100 | 12 |
| **63** | 130 | 70 | 113 | 118 | 45 | 55 | 190 | 3 | 10 | 30 | 18 | M8 x 14 | 12 | 118 | 18 |
| **80** | 165 | 81 | 141 | 128 | 55 | 67 | 237 | 3 | 12 | 35 | 22 | M10 x 17 | 15 | 147 | 28 |

* Threaded bores on page 4 at extra charge. Dimensions may be subject to alteration.

## Permissible Radial Loads $F_R$ [N] for Normal Output Shaft and Bearing System

The permiss. radial loads indicated in the table are calculated for the centre of the output shaft end, also calculating in the output speed and the nominal output torque. The values were calculated for the adverse rotational direction. The permiss. radial loads only apply to unilateral load. If in your application high radial loads occur in combination with axial loads, we ask you to contact us.

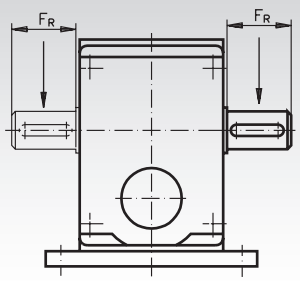


| Size | Output Torques Nm | Permiss. Radial Load [N] at Output Speeds $n_2$ [$min^{-1}$] 6 | 8 | 10 | 12 | 16 | 20 | 25 | 32 | 40 | 50 | 63 | 80 | 100 | 125 | 160 | 200 | 250 | 320 |
|---|---|---|---|---|---|---|---|---|---|---|---|---|---|---|---|---|---|---|---|
| **40** | 0 - 80 | 2500 | 2375 | 2250 | 2125 | 2000 | 1875 | 1775 | 1675 | 1575 | 1400 | 1325 | 1250 | 1175 | 1125 | 1050 | 925 | 875 | 800 |
| **50** | 0 - 125 | 3500 | 3325 | 3150 | 2970 | 2800 | 2620 | 2480 | 2340 | 2200 | 1960 | 1850 | 1750 | 1640 | 1570 | 1470 | 1290 | 1220 | 1120 |
| | 125 - 160 | 3200 | 3040 | 2880 | 2720 | 2560 | 2400 | 2270 | 2140 | 2010 | 1790 | 1700 | 1600 | 1500 | 1440 | 1340 | 1180 | 1120 | 1020 |
| **63** | 0 - 200 | 5000 | 4750 | 4500 | 4250 | 4000 | 3750 | 3550 | 3350 | 3150 | 2800 | 2650 | 2500 | 2350 | 2250 | 2100 | 1850 | 1750 | 1600 |
| | 200 - 250 | 4600 | 4360 | 4140 | 3910 | 3680 | 3450 | 3260 | 3080 | 2900 | 2570 | 2440 | 2300 | 2160 | 2070 | 1930 | 1700 | 1610 | 1470 |
| | 250 - 320 | 3500 | 3325 | 3150 | 2975 | 2800 | 2625 | 2485 | 2345 | 2205 | 1960 | 1855 | 1750 | 1645 | 1575 | 1470 | 1295 | 1225 | 1120 |
| **80** | 0 - 500 | 7500 | 7120 | 6740 | 6370 | 6000 | 5620 | 5320 | 5000 | 4700 | 4200 | 4000 | 3750 | 3500 | 3370 | 3140 | 2770 | 2620 | 2400 |

# Please use our website

# at www.maedler.de

**Put in a search word or part number and go directly to the product page**

**Find the PDF-catalogue page and further information**

**Manual instructions, certificates, safety data sheets in the section Downloads**

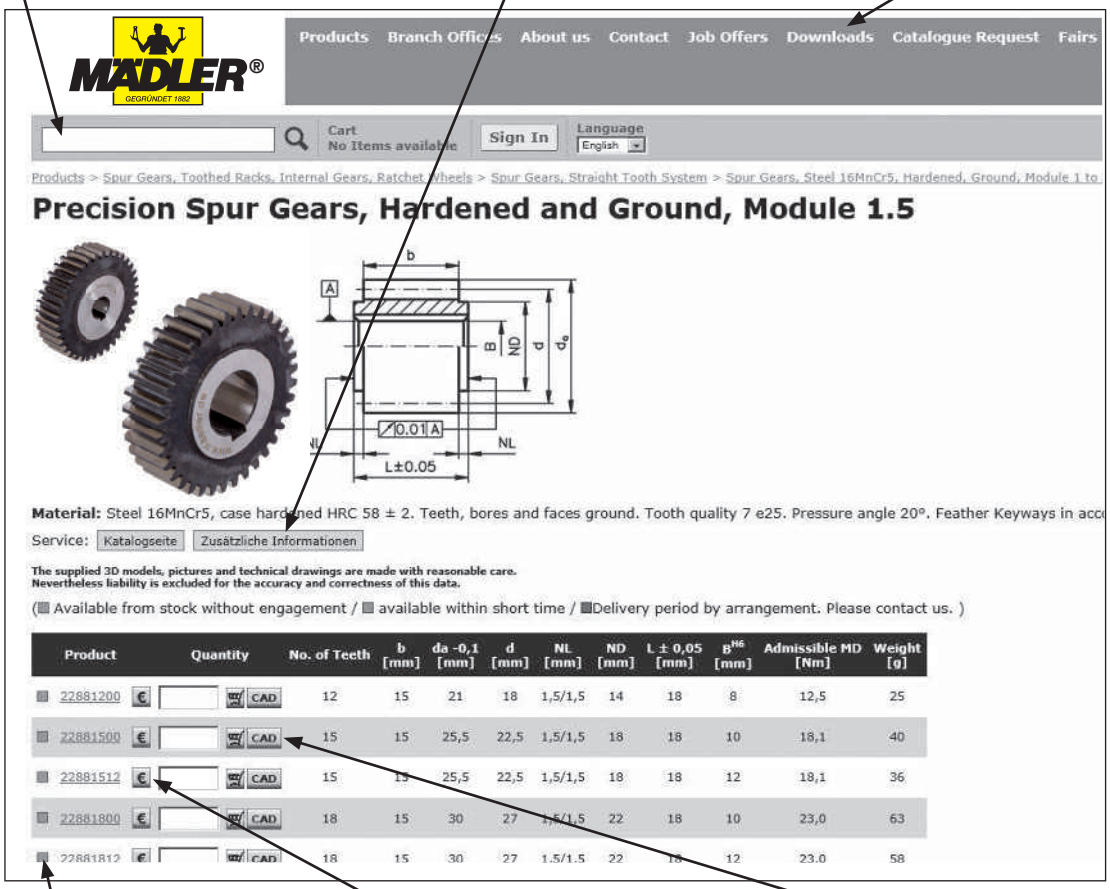


**The availability of all products is shown by coloured sign**

**Drag the mouse onto the currency-symbol to see the prices***

**Download CAD-drawings in 3D**

## A lot of possibilities and information:

- **Download of PDF catalogues in different languages.**
- **See all our branches and distributors.**
- **Make easily your order online and follow your parcel.**
- ***MÄDLER*®-Tools: Use our selection- and calculation tools.**
- **News: Useful information about exhibitions and others.**
- **Newsletter: Monthly information per e-mail.**

* Prices and terms of delivery depend on the country.

## Standard Three-Phase Motors SM/I, with Cage Rotor, Surface Cooled, for 230/400 V, 50 Hz

These motors comply with the recommendations IEC 72. Electrical characteristics according to VDE 0530 and recommendation IEC 34-1. Housing aluminium die-cast. The motors are self-ventilated and are fitted with radial plastic fans, which cool independently of the sense of rotation. Fan cover made from steel sheet. Protection class IP 55. Isolation class F.

The rated output stated below refers to continuous duty, an operating frequency of 50 Hz, a maximum ambient temperature of 40°C and an altitude 1,000 m above sea level.

**From 0.75 kW in efficiency class IE2 (only 2 - 6 pole motors).**

Special versions on request: With non-standard voltage and frequency, dual speed, with electromagnetical DC spring-tension disc brake; AC capacitor motor 230 Volt.

**Ordering details: e.g.: Type, Model, Product No.**

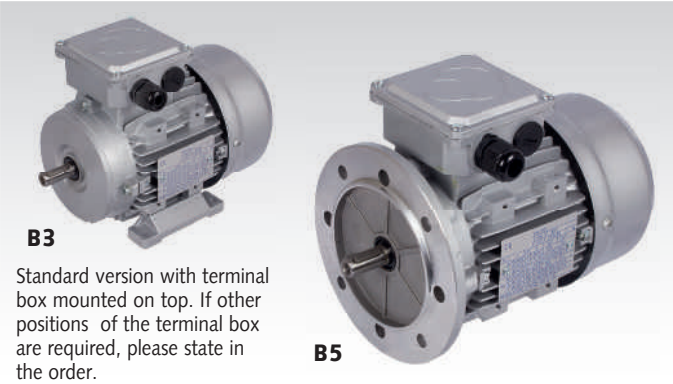


Standard version with terminal box mounted on top. If other positions of the terminal box are required, please state in the order.

### 2 Poles approx. 3000 min-1

| Model B3 Product No. | Model B5 Product No. | Size | Nominal Power kW | Nominal Speed min-1 | J kgm² | η at speed 4/4n 3/4n 2/4n % | Power Factor cos φ | Current at 400V A | Nominal Torque $T_n$ [Nm] | Starting Torque $T_a/T_n$ | Starting Current $I_d/I_n$ | max. Torque $T_{max}/T_n$ | Weight B3 kg |
|---|---|---|---|---|---|---|---|---|---|---|---|---|---|
| 430 004 00 | 430 024 00 | 63 | 0,25 | 2710 | 0,00024 | 65 / - / - | 0,78 | 0,71 | 0,88 | 2,2 | 6,0 | 2,4 | 4,4 |
| 430 005 00 | 430 025 00 | 71 | 0,37 | 2730 | 0,00035 | 65 / - / - | 0,79 | 0,97 | 1,3 | 2,2 | 6,0 | 2,4 | 5,6 |
| 430 006 00 | 430 026 00 | 71 | 0,55 | 2760 | 0,00052 | 65 / - / - | 0,79 | 1,42 | 1,9 | 2,2 | 6,0 | 2,4 | 6,1 |
| 430 007 00 | 430 027 00 | 80 | 0,75 | 2840 | 0,00073 | 77,4 / 77,4 / 74,3 | 0,80 | 1,75 | 2,5 | 2,9 | 5,8 | 3,3 | 8,7 |
| 430 008 00 | 430 028 00 | 80 | 1,1 | 2850 | 0,00090 | 79,6 / 79,5 / 77,0 | 0,82 | 2,42 | 3,7 | 3,5 | 6,8 | 3,6 | 10,5 |
| 430 009 00 | 430 029 00 | 90 S | 1,5 | 2850 | 0,00125 | 81,3 / 81,2 / 78,8 | 0,83 | 3,20 | 5,0 | 3,5 | 6,9 | 3,6 | 13,1 |
| 430 010 00 | 430 030 00 | 90 L | 2,2 | 2860 | 0,00145 | 83,2 / 83,4 / 81,4 | 0,84 | 4,54 | 7,4 | 4,1 | 7,9 | 4,1 | 15,0 |
| 430 011 00 | 430 031 00 | 100 L | 3 | 2880 | 0,00310 | 84,6 / 84,2 / 82,0 | 0,87 | 5,88 | 9,9 | 3,4 | 7,8 | 3,4 | 24,2 |
| 430 012 00 | 430 032 00 | 112 M-T | 4 | 2890 | 0,00550 | 85,8 / 85,8 / 83,9 | 0,89 | 7,54 | 13,2 | 2,7 | 7,5 | 3,3 | 25,8 |
| 430 013 00 | 430 033 00 | 132 S | 5,5 | 2900 | 0,01040 | 87,0 / 87,6 / 86,6 | 0,89 | 10,20 | 18,1 | 2,4 | 7,7 | 3,0 | 43,8 |

### 4 Poles approx. 1500 min-1

| Model B3 Product No. | Model B5 Product No. | Size | Nominal Power kW | Nominal Speed min-1 | J kgm² | η at speed 4/4n 3/4n 2/4n % | Power Factor cos φ | Current at 400V A | Nominal Torque $T_n$ [Nm] | Starting Torque $T_a/T_n$ | Starting Current $I_d/I_n$ | max. Torque $T_{max}/T_n$ | Weight B3 kg |
|---|---|---|---|---|---|---|---|---|---|---|---|---|---|
| 430 043 00 | 430 063 00 | 63 | 0,18 | 1350 | 0,0003 | 59 / - / - | 0,65 | 0,68 | 1,3 | 2,2 | 6,0 | 2,4 | 4,3 |
| 430 044 00 | 430 064 00 | 71 | 0,25 | 1350 | 0,0007 | 60 / - / - | 0,72 | 0,84 | 1,8 | 2,2 | 6,0 | 2,4 | 5,4 |
| 430 045 00 | 430 065 00 | 71 | 0,37 | 1370 | 0,0010 | 65 / - / - | 0,74 | 1,11 | 2,6 | 2,2 | 6,0 | 2,4 | 6,2 |
| 430 046 00 | 430 066 00 | 80 | 0,55 | 1370 | 0,0020 | 67 / - / - | 0,75 | 1,58 | 3,7 | 2,2 | 6,0 | 2,4 | 9,0 |
| 430 047 00 | 430 067 00 | 80 | 0,75 | 1410 | 0,0022 | 79,6 / 80,6 / 79,1 | 0,76 | 1,79 | 5,1 | 2,8 | 5,3 | 3,0 | 10,5 |
| 430 048 00 | 430 068 00 | 90 S | 1,1 | 1420 | 0,0024 | 81,4 / 82,0 / 80,1 | 0,78 | 2,50 | 7,4 | 3,8 | 6,7 | 2,6 | 14,5 |
| 430 049 00 | 430 069 00 | 90 L | 1,5 | 1420 | 0,0030 | 82,8 / 83,3 / 81,4 | 0,79 | 3,31 | 10,1 | 4,0 | 7,2 | 2,7 | 17,6 |
| 430 050 00 | 430 070 00 | 100 L | 2,2 | 1440 | 0,0056 | 84,3 / 84,4 / 82,5 | 0,78 | 4,83 | 14,6 | 3,6 | 7,4 | 3,6 | 20,0 |
| 430 051 00 | 430 071 00 | 100 L | 3 | 1440 | 0,0069 | 85,5 / 85,7 / 84,0 | 0,80 | 6,33 | 19,9 | 3,8 | 7,8 | 3,5 | 21,1 |
| 430 052 00 | 430 072 00 | 112 M-T | 4 | 1440 | 0,0097 | 86,6 / 87,2 / 86,2 | 0,81 | 8,23 | 26,5 | 3,1 | 7,1 | 2,9 | 30,8 |
| 430 053 00 | 430 073 00 | 132 S | 5,5 | 1450 | 0,0221 | 87,7 / 88,1 / 87,2 | 0,83 | 10,90 | 36,2 | 2,6 | 7,4 | 2,7 | 43,0 |

### 6 Poles approx. 1000 min-1

| Model B3 Product No. | Model B5 Product No. | Size | Nominal Power kW | Nominal Speed min-1 | J kgm² | η at speed 4/4n 3/4n 2/4n % | Power Factor cos φ | Current at 400V A | Nominal Torque $T_n$ [Nm] | Starting Torque $T_a/T_n$ | Starting Current $I_d/I_n$ | max. Torque $T_{max}/T_n$ | Weight B3 kg |
|---|---|---|---|---|---|---|---|---|---|---|---|---|---|
| 430 104 00 | 430 124 00 | 71 | 0,25 | 900 | 0,0013 | 59 / - / - | 0,70 | 0,87 | 2,65 | 2,1 | 4,0 | 2,2 | 6,5 |
| 430 105 00 | 430 125 00 | 80 | 0,37 | 900 | 0,0016 | 62 / - / - | 0,70 | 1,23 | 3,93 | 1,9 | 4,0 | 1,9 | 8,2 |
| 430 106 00 | 430 126 00 | 80 | 0,55 | 900 | 0,0026 | 67 / - / - | 0,72 | 1,65 | 5,84 | 2,0 | 4,0 | 2,3 | 9,9 |
| 430 107 00 | 430 127 00 | 90 S | 0,75 | 925 | 0,0031 | 75,9 / 75,0 / 70,5 | 0,71 | 2,01 | 7,7 | 3,1 | 4,7 | 3,1 | 12,1 |
| 430 108 00 | 430 128 00 | 90 L | 1,1 | 930 | 0,0038 | 78,1 / 78,1 / 75,2 | 0,72 | 2,82 | 11,3 | 3,2 | 5,0 | 3,2 | 16,6 |
| 430 109 00 | 430 129 00 | 100 L | 1,5 | 940 | 0,0075 | 79,8 / 80,0 / 77,6 | 0,73 | 3,71 | 15,2 | 3,1 | 5,9 | 2,9 | 21,8 |
| 430 110 00 | 430 130 00 | 112 M-T | 2,2 | 945 | 0,0143 | 81,8 / 82,5 / 81,0 | 0,75 | 5,17 | 22,2 | 2,6 | 5,5 | 2,8 | 29,5 |
| 430 111 00 | 430 131 00 | 132 S | 3 | 960 | 0,0238 | 83,3 / 84,4 / 83,5 | 0,76 | 6,84 | 29,8 | 2,2 | 5,7 | 2,7 | 35,0 |
| 430 112 00 | 430 132 00 | 132 M | 4 | 960 | 0,0321 | 84,6 / 85,3 / 84,1 | 0,77 | 8,86 | 39,8 | 2,4 | 6,2 | 2,7 | 49,7 |
| 430 113 00 | 430 133 00 | 132 M | 5,5 | 960 | 0,0436 | 86,0 / 86,4 / 85,3 | 0,77 | 12,0 | 54,7 | 2,6 | 6,7 | 2,7 | 54,7 |

### 8 Poles approx. 750 min-1

| Model B3 Product No. | Model B5 Product No. | Size | Nominal Power kW | Nominal Speed min-1 | J kgm² | η at speed 4/4n % | Power Factor cos φ | Current at 400V A | Nominal Torque $T_n$ [Nm] | Starting Torque $T_a/T_n$ | Starting Current $I_d/I_n$ | max. Torque $T_{max}/T_n$ | Weight B3 kg |
|---|---|---|---|---|---|---|---|---|---|---|---|---|---|
| 430 144 00 | 430 164 00 | 80 | 0,25 | 680 | 0,00254 | 56 | 0,61 | 1,06 | 3,5 | 1,6 | 2,7 | 2,0 | 10,9 |
| 430 145 00 | 430 165 00 | 90 S | 0,37 | 680 | 0,00242 | 63 | 0,63 | 1,35 | 5,2 | 1,6 | 2,8 | 1,8 | 14,8 |
| 430 146 00 | 430 166 00 | 90 L | 0,55 | 680 | 0,00320 | 66 | 0,65 | 1,85 | 7,7 | 1,6 | 3,0 | 1,8 | 17,2 |
| 430 147 00 | 430 167 00 | 100 L | 0,75 | 710 | 0,00519 | 66 | 0,67 | 2,45 | 10,1 | 1,7 | 3,5 | 2,1 | 17,5 |
| 430 148 00 | 430 168 00 | 100 L | 1,1 | 710 | 0,00668 | 72 | 0,69 | 3,20 | 14,8 | 1,7 | 3,5 | 2,1 | 19,7 |
| 430 149 00 | 430 169 00 | 112 M-T | 1,5 | 710 | 0,01220 | 74 | 0,68 | 4,30 | 20,2 | 1,8 | 4,2 | 2,1 | 25,6 |
| 430 150 00 | 430 170 00 | 132 S | 2,2 | 720 | 0,01940 | 75 | 0,71 | 5,96 | 29,2 | 2,0 | 5,5 | 2,0 | 35,5 |
| 430 151 00 | 430 171 00 | 132 M | 3 | 720 | 0,03430 | 77 | 0,73 | 7,70 | 39,8 | 2,0 | 5,5 | 2,0 | 45,0 |

**Other power rates and model B14 available at short time.**

**Motor-tensioning rails see page 695.**

## Dimensions Table Standard Three-Phase Motors SM/I, Model B 3

Standard version with terminal box mounted on top. If other positions of the terminal box are required, please state in the order.

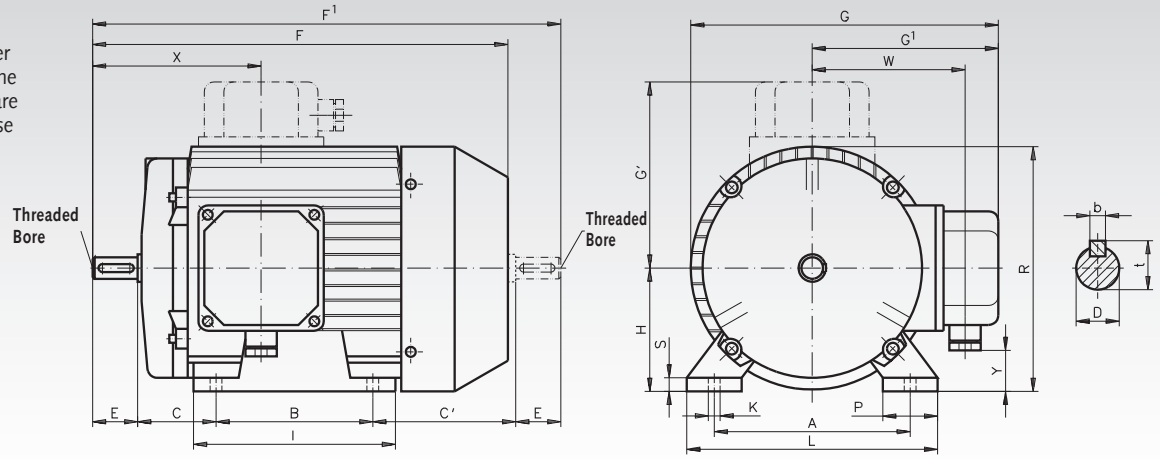


**Position of terminal box: standard on top (against drawing!)**

| Size | A mm | B mm | C mm | D mm | E mm | F mm | G mm | H +0 -0.5 mm | K mm | I mm | L mm | P mm | R mm | S mm | C1 mm | F1 mm | G1 mm | X mm | Y mm | W mm | b mm | t mm | PG-Screw Connect. | Threaded Bore |
|---|---|---|---|---|---|---|---|---|---|---|---|---|---|---|---|---|---|---|---|---|---|---|---|---|
| **63** | 100 | 80 | 40 | $11^{j6}$ | 23 | 212 | 158 | 63 | 6 | 103 | 128 | 28 | 125 | 7 | 73 | 239 | 113 | 86 | 18 | 68 | 4 | 12,5 | Pg11 | M4x0,7 |
| **71** | 112 | 90 | 45 | $14^{j6}$ | 30 | 238 | 185 | 71 | 7 | 101 | 137 | 24 | 144 | 10 | 85.5 | 280 | 125 | 111 | 20 | 88 | 5 | 16 | Pg11 | M5x0,8 |
| **80** | 125 | 100 | 50 | $19^{j6}$ | 40 | 274 | 210 | 80 | 9 | 122 | 155 | 30 | 164 | 10 | 93.5 | 323 | 133 | 113 | 30 | 96 | 6 | 21,5 | Pg11 | M6x1 |
| **90S** | 140 | 100 | 56 | $24^{j6}$ | 50 | 297 | 230 | 90 | 10 | 125 | 175 | 34 | 180 | 12 | 118 | 374 | 148 | 134 | 30 | 115 | 8 | 27 | Pg13.5 | M8x1,25 |
| **90L** | 140 | 125 | 56 | $24^{j6}$ | 50 | 322 | 230 | 90 | 10 | 150 | 175 | 34 | 180 | 12 | 118 | 399 | 148 | 134 | 30 | 115 | 8 | 27 | Pg13.5 | M8x1,25 |
| **100L** | 160 | 140 | 63 | $28^{j6}$ | 60 | 361 | 253 | 100 | 12 | 173 | 198 | 37 | 205 | 14 | 107 | 430 | 156 | 160 | 35 | 123 | 8 | 31 | Pg13.5 | M10x1,5 |
| **112M-T** | 190 | 140 | 70 | $28^{j6}$ | 60 | 361 | 265 | 112 | 12 | 178 | 224 | 38 | 217 | 15 | 100 | 430 | 173 | 160 | 47 | 123 | 8 | 31 | Pg13.5 | M10x1,5 |
| **132S** | 216 | 140 | 89 | $38^{k6}$ | 80 | 470 | 328 | 132 | 13 | 225 | 258 | 50 | 264 | 19 | 167 | 556 | 189 | 198 | 50 | 162 | 10 | 41 | Pg21 | M12x1,75 |
| **132M** | 216 | 178 | 89 | $38^{k6}$ | 80 | 496 | 328 | 132 | 13 | 225 | 258 | 50 | 264 | 19 | 173 | 600 | 189 | 198 | 50 | 162 | 10 | 41 | Pg21 | M12x1,75 |

## Dimensions Table Standard Three-Phase Motors SM/I, Model B 5

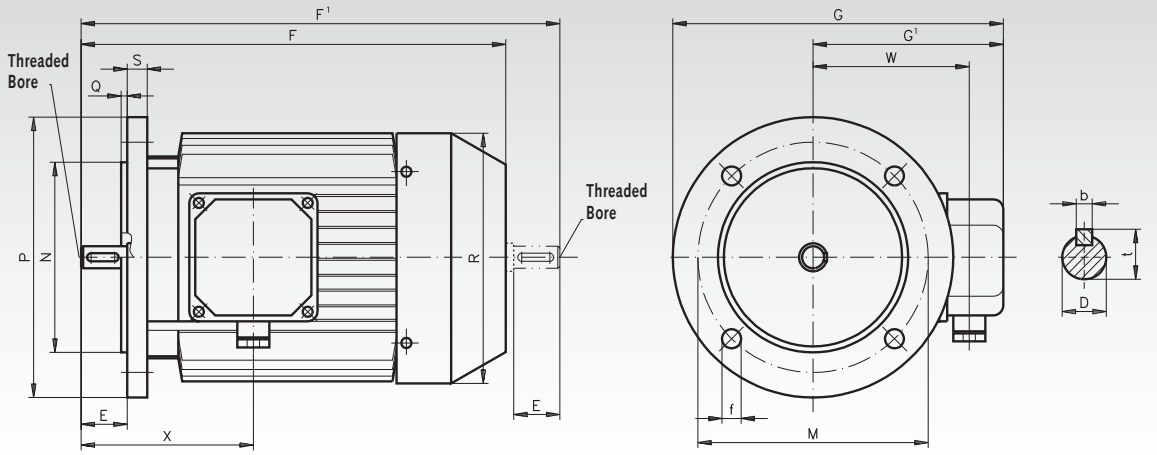


| Size | D mm | E mm | F mm | f mm | G mm | M mm | N mm | P mm | Q mm | R mm | S mm | Flange-bores* | F1 mm | G1 mm | X mm | W mm | b mm | t mm | PG-Screw Connect. | Threaded Bore |
|---|---|---|---|---|---|---|---|---|---|---|---|---|---|---|---|---|---|---|---|---|
| **63** | $11^{j6}$ | 23 | 212 | 9,5 | 165 | 115 | $95^{j6}$ | 140 | 3 | 125 | 10 | 4 | 239 | 113 | 86 | 68 | 4 | 12,5 | Pg11 | M4x0,7 |
| **71** | $14^{j6}$ | 30 | 238 | 9,5 | 195 | 130 | $110^{j6}$ | 160 | 3,5 | 148 | 10 | 4 | 280,5 | 125 | 111 | 88 | 5 | 16 | Pg11 | M5x0,8 |
| **80** | $19^{j6}$ | 40 | 274 | 11,5 | 226 | 165 | $130^{j6}$ | 200 | 3,5 | 170 | 12 | 4 | 323,4 | 133 | 113 | 96 | 6 | 21,5 | Pg11 | M6x1 |
| **90S** | $24^{j6}$ | 50 | 297 | 11,5 | 242 | 165 | $130^{j6}$ | 200 | 3,5 | 185 | 12 | 4 | 374 | 148 | 134 | 115 | 8 | 27 | Pg13.5 | M8x1,25 |
| **90L** | $24^{j6}$ | 50 | 322 | 11,5 | 242 | 165 | $130^{j6}$ | 200 | 3,5 | 185 | 12 | 4 | 399 | 148 | 134 | 115 | 8 | 27 | Pg13.5 | M8x1,25 |
| **100L** | $28^{j6}$ | 60 | 361 | 14 | 280 | 215 | $180^{j6}$ | 250 | 4 | 210 | 14 | 4 | 430 | 173 | 160 | 123 | 8 | 31 | Pg13.5 | M10x1,5 |
| **132S** | $38^{k6}$ | 80 | 470 | 14 | 350 | 265 | $230^{j6}$ | 300 | 4 | 260 | 14 | 4 | 556 | 189 | 198 | 162 | 10 | 41 | Pg21 | M12x1,75 |
| **132M** | $38^{k6}$ | 80 | 496 | 14 | 350 | 265 | $230^{j6}$ | 300 | 4 | 260 | 14 | 4 | 600 | 189 | 198 | 162 | 10 | 41 | Pg21 | M12x1,75 |

* Number of Flange boreholes.

# Operating and maintenance instructions

## on the internet at www.maedler.de

## in the Section Downloads

On our website you can find operating and maintenance instructions in various languages for all our technically-sophisticated products. We are continuously extending this list of instructions.

| Instructions available: | Language | | |
|---|---|---|---|
| Bevel Gearboxes DZA, DZR | German | English | French |
| Bevel Gearboxes KU/I, KUM | German | English | French |
| Chain Tensioners SPANNBOX®, SPANNBOY® | Deutsch | English | |
| Continuously Variable Geared Motors MUN/I | German | English | |
| Couplings DX | German | English | |
| Couplings RN, RNG, RNH, RNI, RNK, RNT | German | English | |
| Couplings BW / BOS / BOZ | German | English | French |
| Electronic Drip Oilers ELO | German | English | |
| Frequency Converters FU6 | German | | |
| Frequency Converters RoFre 897 | German | | |
| Helical Gear Boxes BT/I | German | English | |
| Helical Geared Motor HR/I | German | English | |
| Helical Geared Motor NR/I | German | English | French |
| Linear Drives (Actuator Systems) GR/I | German | English | |
| Motor Controllers SFRG 05 | German | | |
| Motor Controllers SFRG 3 | German | | |
| Precision Worm Gear Sets | German | | |
| Safety Clutches CM | German | | |
| Safety Clutches SI | German | English | French |
| Shaft Mounted Gearboxes BOC/I | German | English | |
| Sliding Hubs FA | German | | |
| Sliding Hubs FS | German | English | |
| Sliding Hubs ROBA® | German | | |
| Sliding Hubs with Coupling RNR | German | | |
| Slip Clutches KF | German | English | |
| Slip Clutches R2, R6 | German | | |
| Standard Three-Phase-Motors SM/I | German | | |
| Taper Bushes | German | English | French |
| Telescopic Slides Accuride | German | English | French |
| Worm Geared Motors HMD I / HMD II | German | English | French |
| Worm-Geared Motors MEG / MEK / MH / MZ | German | English | French |
| Worm-Geared Motors R / RH / RL / RM / RS | German | English | French |
| Worm-Geared Motors SRM / SRS | German | English | French |
| Worm-Geared Motors SZM, ZMD | German | English | French |
| Worm Gear Screw Jacks NP/I | German | | |
| Worm Gear Units G/II | German | English | French |
| Worm Gear Units ZM | German | English | French |

## Motor-Tensioning Rail Sets, Made from Steel, SPS, with Movable Attachment Clamps

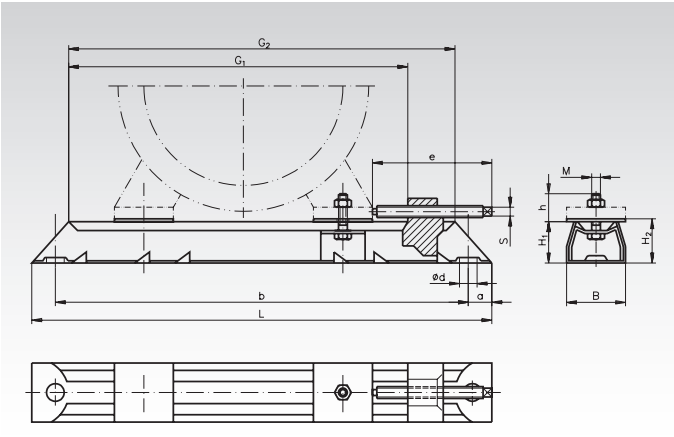


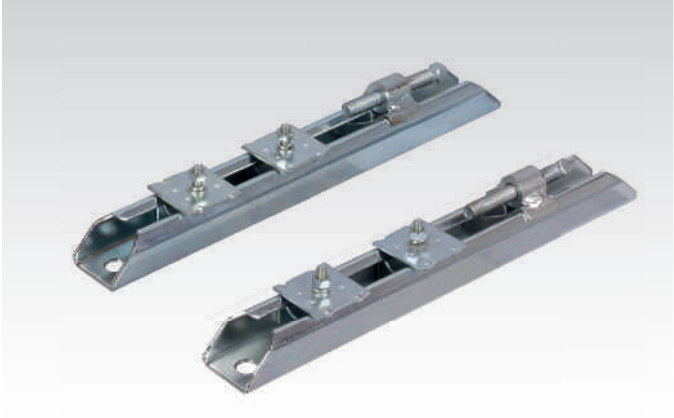

Ordering details: e.g.: Type, Overall Length, Product No.

**Sold in pairs: 1 x Product No. = 1 pair**

| Product No. Pair | Overall Length L mm | Sliding Length $G_1$ mm | Motor Size | M x h mm | e x S mm | $G_2$ mm | a mm | b mm | Ød mm | B mm | $H_1$ mm | $H_2$ mm | Weight kg |
|---|---|---|---|---|---|---|---|---|---|---|---|---|---|
| **430 180 00** | 312 | 240 | 63/71 | M6 x 19 | 75 x 6 | 262 | 16 | 280 | 12 | 40 | 28 | 30 | 1,5 |
| **430 182 00** | 395 | 302 | 80/90 | M8 x 28 | 97 x 8 | 325 | 20 | 355 | 12 | 50 | 40 | 43 | 3,3 |
| **430 184 00** | 495 | 405 | 100/112/132 | M10 x 35 | 97 x 8 | 425 | 20 | 455 | 12 | 50 | 40 | 43 | 4,15 |
| **430 186 00** | 630 | 515 | 132 | M10 x 37 | 119 x 9 | 542 | 25 | 580 | 14 | 60 | 50 | 54 | 8,1 |

## Models Helical Geared Motors (The pictures only show the models, not the gearbox version)

**B 3**

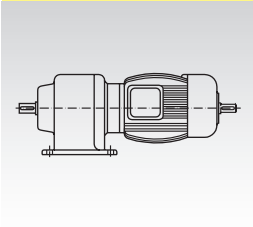

**B 3 / B 5**

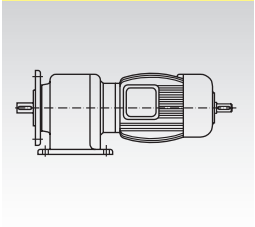

**B 8 / B 5**

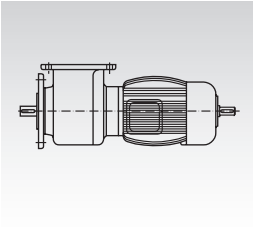

**B 5**

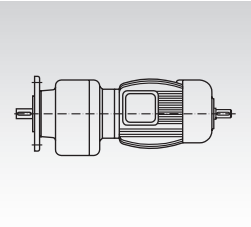

**B 5a**

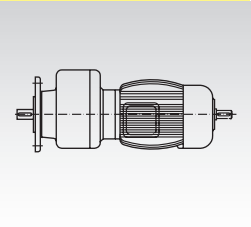

**B 5 without Flange**

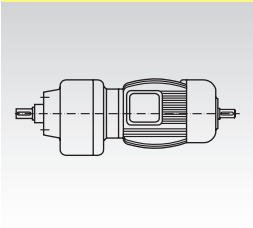

**B 6**

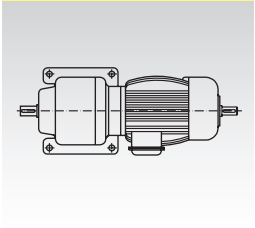

**B 7**

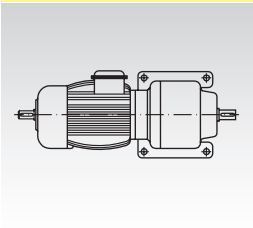

**B 8**

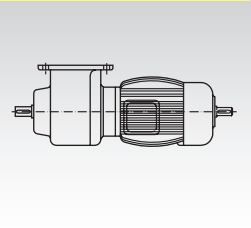

**V 1**

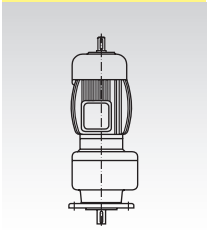

**V 1 / V 5**

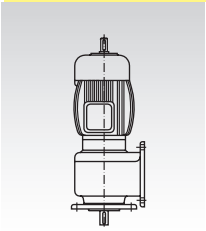

**V 3**

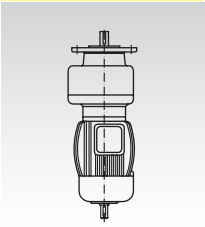

**V 3 / V 6**

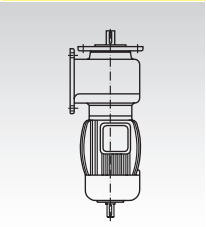

**V 5**

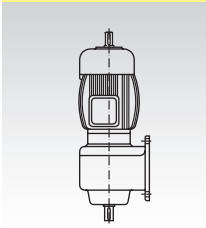

**V 6**

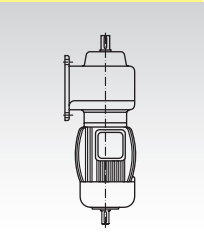

## Motor controller SFRG 05 for DC-drives

- Intelligent motor controller with PWM output for speed setting or controlling of brushed DC motors.
- Supply voltage: 6 - 48 V DC.
- Motor current: 2,5 A continuous load (5 A peak current).
- Speed setting device or PI-controller operation.
- 4 logical inputs.
- Usable for CANopen.
- Setpoint setting possible via external pot (not included) or external voltage.
- Compact Version thanks to SMD technology.

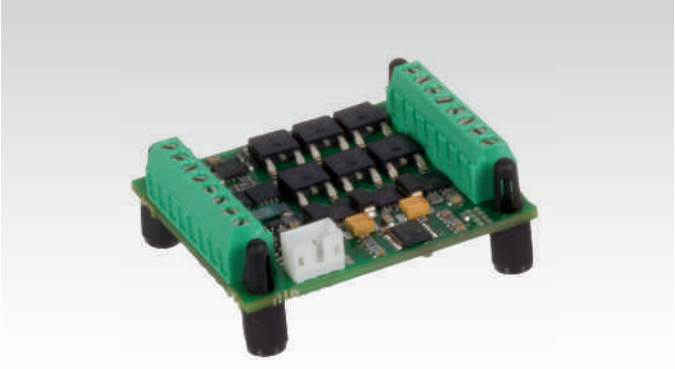

**Ordering Details: Product No. 430 460 05, Control Unit SFRG 05**

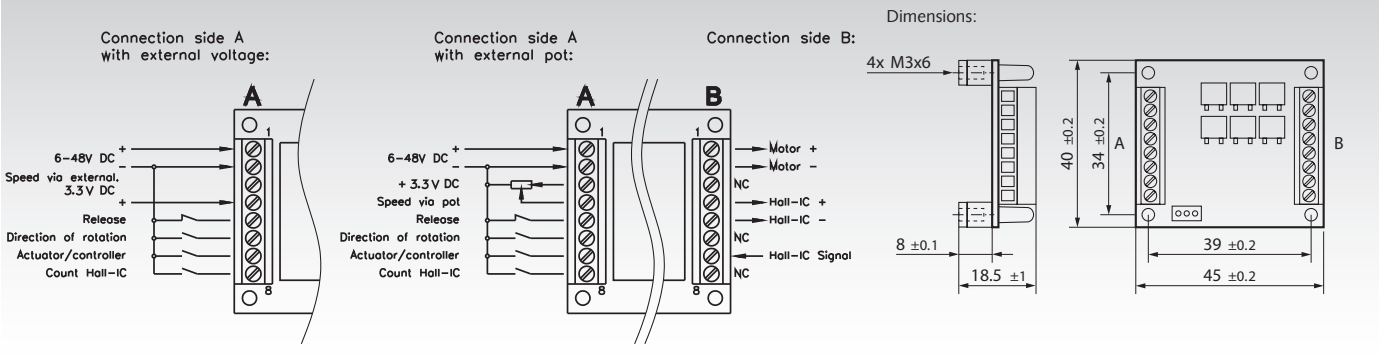


### Product No. 430 460 05, Control Unit SFRG 05

#### Electrical data

| | |
|---|---|
| **Supply voltage:** | 6 V ... 48 V DC. |
| **Motor nominal current:** | 2.5 A continuous load (peak current max. 5 A). |
| **Speed selection:** | 0 V ... 3.3 V DC via 10 kOhm or external voltage. |
| **Logical Inputs:** | 0 V ... 3.3 V, max. 50 mA. |
| **Output switching frequency:** | approx. 20 kHz. |
| **No load current:** | at 6 V ... 48 V DC, 70 mA...20 mA. |

#### General data

| | |
|---|---|
| **Protection class:** | 3. |
| **Protection rating:** | open module IP00 as per IEC529 / EN 60529 / DIN VDE 0470 T1. |
| **Isolation:** | Low voltage operation. |
| **Shock protection:** | not needed. |
| **Level of contamination:** | 2. Weight 25 g. |

Permissible ambient operating temperature: -20 to +80°C.

The circuit board is designed for installing in a closed control cabinet or similar housing made from metal with protection class IP 4x. Adequate ventilation is to be provided (free convection). The wiring has to be carried out as per EMC requirements.

## Motor controller SFRG 3 for DC-drives

- Intelligent motor controller with PWM output for speed setting or controlling (option) of brushed DC motors.
- Supply voltages: 10 - 36 V DC or 10 - 24 V AC.
- Motor current up to 10 A continuous load.
- Usable for CANopen.
- 5 potential-free switching inputs or 5 voltage input signals 10 - 24 V (switchable per jumpers), 5 setting potentiometers.
- 2 counting inputs for hall sensors or encoder.
- 2 switching outputs, max. 1.5 A.
- 2 zero-voltage relays with changeover contacts.
- Output 12V DC max. 0,4 A, e.eg. to supply stop switches.
- Ramp function for start / stop.
- Motor current monitoring.
- pre-programmed functions: Left, right, stop, release.

**Ordering Details: Product No. 430 460 30, Control Unit SFRG 3**

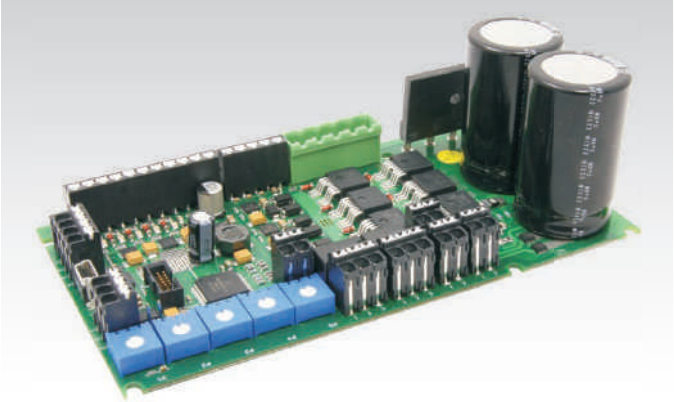

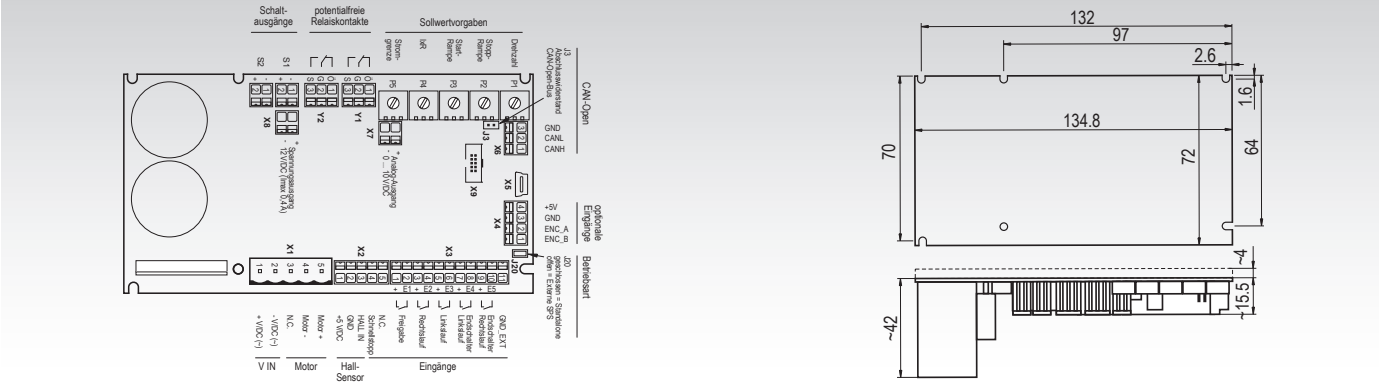


### Product No. 430 460 30, Control Unit SFRG 3

### Electrical data

| | |
|---|---|
| **Supply voltage:** | 10 V... 36 V DC/10 V... 24 V AC. |
| **Motor nominal current:** | 10 A continuous load (peak current max. 25 A). |
| **Motor current limit:** | adjustable (stepless 0-100 % in 1% steps). |
| **Speed setting range:** | up to 50:1 (setting mode IxR / controlled operation.) |
| **Digital inputs:** | potential-free NO contact, approx. 2 mA or voltage input signals 10 - 24V DC, (switchable per jumpers). |
| **Output switching frequency:** | approx. 18 kHz. |
| **Switching outputs:** | max. 1.5 A. |
| **Relay outputs:** | max. 1A / 24 V DC. |
| **Ramp function:** | Rise time/fall time 0-100 % in 1% steps. |
| **Interfaces:** | CANopen. |

### General data

| | |
|---|---|
| **Connector technology:** | plug-in spring-type terminals. |
| **Approvals:** | complies to the CE standard. |
| **Protection class:** | 3. |
| **Protection rating:** | open module IP00 as per IEC529 / EN 60529 / DIN VDE 0470 T1. |
| **Isolation:** | Low voltage operation. |
| **Shock protection:** | not needed. |
| **Level of contamination:** | 2. Weight 120 g. |

Permissible ambient operating temperature: -10 to +60°C.

The circuit board is designed for installing in a closed control cabinet or similar housing made from metal with protection class IP 4x. Adequate ventilation is to be provided (free convection). The wiring has to be carried out as per EMC requirements.

**Application specific matching of the software functions is possible, as well as terminal connection for external pots as an option.**

## Toroidal transformers for motor controller SFRG 3

- Safety and separation transformers as per EN 61558.
- Insulating class B (130°C ).
- Maximum ambient temperature ta = +60°C.
- Primary and secondary connection via leads, length: 200 mm.
- Temperature switch (120°C) integrated in the primary windings.
- Pressureless central fastening with an M5 screw.
- Preparation for protection class II (as per VDE 0100).

**Ordering Details: e.g.: Product No. 430 460 01, toroidal transformer 120 VA**

| Product No. | Power VA | Primary voltage V(AC) | Secondary voltage V(AC) | Nominal current A | Outside Ø mm | Length mm | Weight kg |
|---|---|---|---|---|---|---|---|
| **430 460 01** | 120 | 1x230 | 1x24 | 5,00 | 98 | 48 | 1,25 |
| **430 460 02** | 192 | 1x230 | 1x24 | 8,00 | 115 | 48 | 1,85 |

### Note for usage

These transformers are suitable for powering control units with a rectifier (e.g. SFRG 3). Use with the SFRG 05 control unit without rectifier is not possible.

## Frequency Converters FU6 (for 3-phase current Drives)

To 0.75 KW

From 1.5 KW

Main features of the Series FU6 are easy parametrisation, a clearly arranged control panel and an extremely easy operation.

**Ordering details: e.g.: 460 310 25 Frequency Converters FU6, 0.25 kW Output Power, 1 Phase**

| Prod. No. | Number of Phases | Output Power kW | Output Voltage V | Output Current A | Input Voltage V | Input Current A | Input Fuse Protection A | Dimensions H x B x T mm | Weight kg |
|---|---|---|---|---|---|---|---|---|---|
| **460 310 25** | 1 | 0,25 | 3 x 0-240 | 1,4 | 1 x 230 | 3,0 | 16 | 132 x 72 x 118 | 0,8 |
| **460 310 37** | 1 | 0,37 | 3 x 0-240 | 2,3 | 1 x 230 | 5,2 | 16 | 132 x 72 x 118 | 0,8 |
| **460 310 75** | 1 | 0,75 | 3 x 0-240 | 4,2 | 1 x 230 | 9,4 | 16 | 132 x 72 x 118 | 0,8 |
| **460 311 50** | 1 | 1,50 | 3 x 0-240 | 7,5 | 1 x 230 | 16,6 | 20 | 143 x 118 x 172 | 1,7 |
| **460 312 20** | 1 | 2,20 | 3 x 0-240 | 10,5 | 1 x 230 | 23,2 | 25 | 143 x 118 x 172 | 1,8 |
| **460 331 50** | 3 | 1,50 | 3 x 0-400 | 3,8 | 3 x 400 | 5,0 | 10 | 143 x 118 x 172 | 1,6 |
| **460 332 20** | 3 | 2,20 | 3 x 0-400 | 5,2 | 3 x 400 | 6,7 | 10 | 143 x 118 x 172 | 1,6 |

**Output**
- Rotating-field frequency 0-200 Hz.
- Voltage boost 10%.
- Overload 150% $I_n$ / 60s.

**Input**
- Voltage 1 x 230 V +/-10% 50/60 Hz.
  or 3 x 400 V +/-10% 50/60 Hz.

**Control unit**
- Cycle rate: 4-16 kHz, adjustable in steps.
- Stop functions: Ramp (0.1-999s), DC braking, coast, brake with chopper from 1.5kW.
- Protection systems: Surge current (200% $I_n$), overload, IGBT excessive temperature, overvoltage, undervoltage.
- Analog input: 0-10 V, 0-20 mA or 10kOhm potentiometer.
- Analog output: 0-10 V (with current output frequency).
- Digital input: Dry contacts or external 24 V DC industrial logic for start up, reversion of rotation 2 programmable inputs (inching mode, fixed setpoint, emergency stop, reset, external control).
- Digital output: Dry contact, programmable.
- Monitoring: Short circuit phase-phase or phase-earth.

**Displays / Operating elements**
- Control keys: Setting of system functions.
- Display: Operating mode and error message.

**Environment**
- Ambient temperature: -10...+40°C.
- Cooling: Fan.
- Rel. humidity: 0...95% not condensing.

**Mechanic**
- Protection class IP20.

**EMC**
- Filter class A included, optional upgrading to class B.

**Diagnostic memory**
- Retrieval of the last 3 operational faults.

**Optional**
- DIN rail mount adapter, brake resistor, setpoint potentiometer 10 kOhm, EMC filter class B.

## Frequency Converters ROfre 897 (for 3-phase current Drives)

- Protection class IP 54, i.e. can be used outside electrical cabinet.
- Completely wired with 2 m screened motor cable, 2 m mains cable with plug and potentiometer.
- Optional with integrated emergency-stop switch (right picture).
- Optional with selector switch for left-right.
- Optional with socket for external operation.

**Ordering details: e.g.: 460 410 25, Frequency Converters ROfre 897, 0.25 kW Output Power without Emergency Stop**

| Prod. No. | Emergency Stop | Output Power kW | Output Voltage V | Output Current A | Input Voltage V | Input Current A | Input Fuse Protection A | Dimensions H x B x T mm | Weight kg |
|---|---|---|---|---|---|---|---|---|---|
| **460 410 25** | No | 0,25 | 3 x 0-240 | 1,4 | 1 x 230 | 3,0 | 16 | 200 x 130 x 120 | 2,2 |
| **460 410 37** | No | 0,37 | 3 x 0-240 | 2,3 | 1 x 230 | 5,2 | 16 | 200 x 130 x 120 | 2,2 |
| **460 410 75** | No | 0,75 | 3 x 0-240 | 4,2 | 1 x 230 | 9,4 | 16 | 200 x 140 x 140 | 2,6 |
| **460 510 25** | Yes | 0,25 | 3 x 0-240 | 1,4 | 1 x 230 | 3,0 | 16 | 200 x 130 x 120 | 2,2 |
| **460 510 37** | Yes | 0,37 | 3 x 0-240 | 2,3 | 1 x 230 | 5,2 | 16 | 200 x 130 x 120 | 2,2 |
| **460 510 75** | Yes | 0,75 | 3 x 0-240 | 4,2 | 1 x 230 | 9,4 | 16 | 200 x 140 x 140 | 2,6 |

**Output**
- Rotating-field frequency 0-200 Hz.
- Voltage boost 10%.
- Overload 150% $I_n$ / 60s.

**Input**
- Voltage 1 x 230 V +/- 10% 50/60 Hz.

**Control unit**
- Cycle rate: 4-16 kHz, adjustable in steps.
- Stop functions: Ramp (0.1-999s), DC braking, coast, brake with chopper from 1.5kW.
- Protection systems: Surge current (200% $I_n$), overload, IGBT excessive temperature, overvoltage, undervoltage.
- Analog input*: 0-10 V, 0-20 mA or 10kOhm potentiometer.
- Analog output*: 0-10 V (with current output frequency).
- Digital input*: Dry contacts or external 24 V DC industrial logic for start up, reversion of rotation. 2 programmable inputs (inching mode, fixed setpoint, emergency stop, reset, external control).
- Digital output*: Dry contact, programmable.
- Monitoring: Short circuit phase-phase or phase-earth.

* Only for optional version with socket for external operation.

**Displays / Operating elements**
- Control keys: Setting of system functions.
- Display: Operating mode and error message.
- Setpoint potentiometer: For continuous adjustment of speed.

**Environment**
- Ambient temperature: -10...+40°C.
- Cooling: Convection.
- Rel. humidity: 0...95% not condensing.

**Mechanic**
- Protection class IP20.

**EMC**
- Filter class A included.

**Diagnostic memory**
- Retrieval of the last 3 operational faults.

## Small Geared Motors Type CRO, 230V

**Motor:** For 230V, 50Hz synchronous motor for both rotational directions (see motor data overview).

**Gearbox:** Spur gears, straight toothed, made from plastic.

**Ambient temperature:** -5 to +70°C

**Capacitor:** Included in delivery.

**Version A:** one-stage, up to 50 Ncm.

**Version B:** two-stage, up to 200 Ncm.

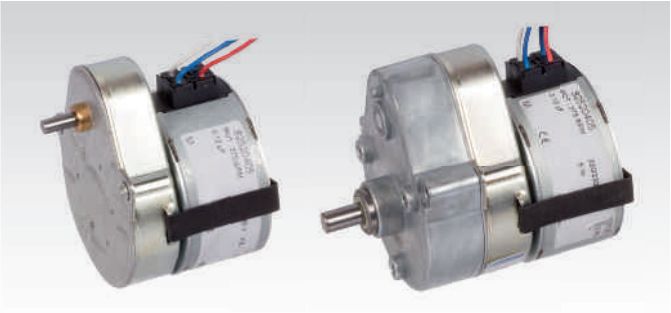

Version A Version B

**Ordering details: e.g.: Type, Version, Output Speed, Product No.**

### Version A

| Product No. | Standard Speed min$^{-1}$ | Weight kg |
|---|---|---|
| 430 200 00 | 60 | 0,25 |
| 430 200 01 | 30 | 0,25 |
| 430 200 02 | 15 | 0,25 |
| 430 200 03 | 10 | 0,25 |
| 430 200 06 | 5 | 0,25 |
| 430 200 08 | 3,12 | 0,25 |
| 430 200 09 | 2 | 0,25 |
| 430 200 10 | 1 | 0,25 |

Max. permiss. static load on bearing:
axial = 10 N, radial = 80 N

**Torque-Speed Table**

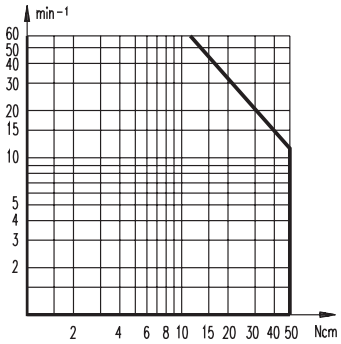


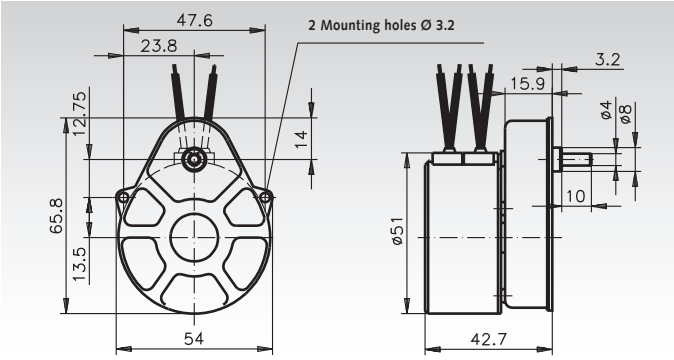


### Version B

| Product No. | Standard Speed min$^{-1}$ | Weight kg |
|---|---|---|
| 430 205 00 | 15 | 0,32 |
| 430 205 01 | 7,5 | 0,32 |
| 430 205 02 | 5 | 0,32 |
| 430 205 03 | 1 | 0,32 |
| 430 205 04 | 0,25 | 0,32 |

Max. permiss. static load on bearing:
axial = 10 N, radial = 100 N

**Torque-Speed Table**

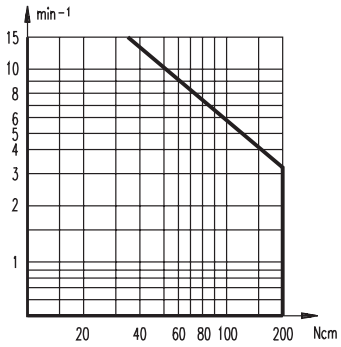


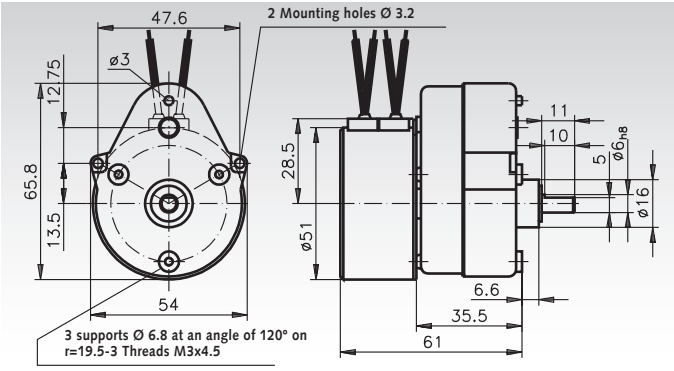


**Motor data/Technical data**

| | |
|---|---|
| Moment of inertia for rotor | 18.8 g·cm$^2$ |
| Absorbed power | 3.5 W |
| Stall torque [1)] | 2.1 Ncm |
| Starting torque | 1.9 Ncm |
| Max. coil temperature | 120 °C |
| Ambient temperature | -5 +70 °C |
| Storage temperature | -40 +100 °C |
| Insulation resistance | >10$^3$ MV |
| Electric strength (50 Hz) | > 2400 V |
| Weight of motor | 210 g |
| Protection class | IP 40 |
| Standard nominal voltage (-15 + 10%) | 220/240 V |
| Absorbed power | 16/17.3 mA |
| Frequency | 50 Hz |
| Speed | 375 min$^{-1}$ |
| Capacitor values ±10% | 0.12/600 µf/V |
| Connection | A |
| Colours of leads for standard motors | Blue: Terminal 1<br>White: Terminal 2 |

### Wiring for parallel line connection A

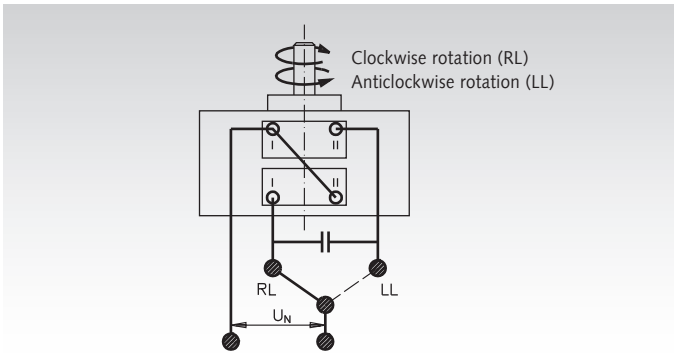


[1)] Max. torque of the motor at continuous operation with nominal voltage and frequency.

## Small Geared Motors GE/I with Capacitor Motor, AC

**General data:** Light model range, extremely high ratios.

**Housing:** Aluminium die-cast, sealed against lubricant leaks and protected against dust, can be mounted in any position.

**Gearing:** Depending on the arrangement of the gear stages milled from high-grade platic or steel.

**Bearing system:** Motor: roller bearing. Gearbox: sintered bronze slide bearing.

**Lubrication:** Maintenance-free grease lubrication.

**Motor:** Capacitor motor for 230 V, 50 Hz, direction of rotation reversible. Pinion milled into motor shaft. The cable gland of the terminal box can be moved 4 x 90°.
**Please note: At continuous operation the motor heats up to 70°C.**

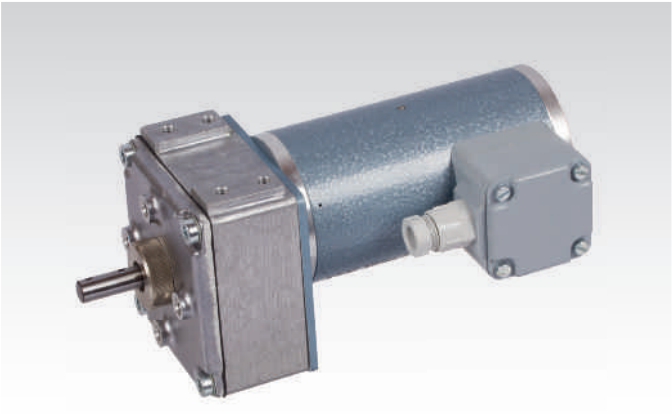

**Ordering details: e.g.: Type, Product No. 430 401 00 Capacitor Motor**
**Product No. 430 301 01 Gearbox 15:1**
**Product No. 436 352 00 Operating Capacitor**
**(has to be ordered separately)**

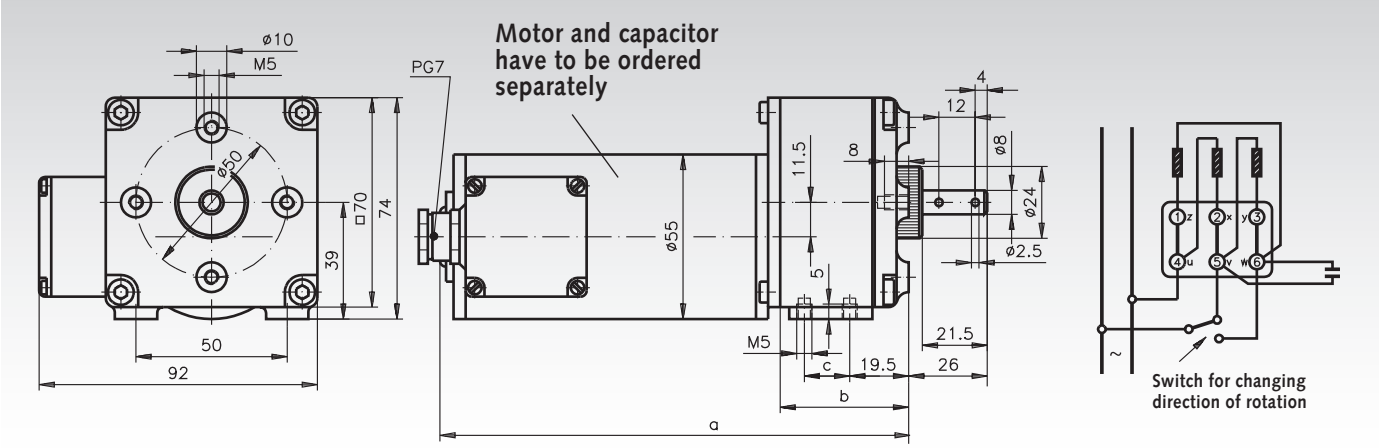


**Capacitor motor: Product No. 430 401 00, Weight 1.2 kg**

***Motor, gearbox and capacitor have to be ordered separately.***

| Gearbox Product No. | Capacitor Motor Product No. | Output Speed in Relation to Motor Speed 2600 min$^{-1}$ | Ratio i | Limit Load Gearbox max. continous Torque Ncm | max. starting Torque Ncm | Nominal Power Watt | Gearbox Efficiency-grad % | Dimensions a mm | b mm | c mm | Weight Gearbox kg |
|---|---|---|---|---|---|---|---|---|---|---|---|
| 430 301 01 | 430 401 00 | 173,3 | 15 : 1 | 30 | 40 | 6,7 | 80 | 181 | 42,5 | 15 | 0,3 |
| 430 302 01 | 430 401 00 | 86,6 | 30 : 1 | 42 | 65 | 6,7 | 72 | 181 | 42,5 | 15 | 0,3 |
| 430 303 01 | 430 401 00 | 57,7 | 45 : 1 | 62 | 90 | 6,7 | 72 | 181 | 42,5 | 15 | 0,3 |
| 430 304 01 | 430 401 00 | 43,3 | 60 : 1 | 70 | 120 | 6,7 | 70 | 181 | 42,5 | 15 | 0,3 |
| 430 305 01 | 430 401 00 | 28,8 | 90 : 1 | 100 | 180 | 6,7 | 70 | 181 | 42,5 | 15 | 0,3 |
| 430 306 01 | 430 401 00 | 21,6 | 120 : 1 | 130 | 230 | 6,7 | 65 | 181 | 42,5 | 15 | 0,3 |
| 430 307 01 | 430 401 00 | 19,2 | 135 : 1 | 150 | 260 | 6,7 | 65 | 181 | 42,5 | 15 | 0,3 |
| 430 308 01 | 430 401 00 | 14,4 | 180 : 1 | 150 | 260 | 6,7 | 65 | 181 | 42,5 | 15 | 0,3 |
| 430 309 01 | 430 401 00 | 10,8 | 240 : 1 | 200 | 300 | 6,7 | 60 | 195 | 56,5 | 26 | 0,45 |
| 430 310 01 | 430 401 00 | 9,6 | 270 : 1 | 200 | 300 | 6,7 | 60 | 181 | 42,5 | 15 | 0,43 |
| 430 311 01 | 430 401 00 | 7,2 | 360 : 1 | 200 | 300 | 6,7 | 60 | 195 | 56,5 | 26 | 0,45 |
| 430 312 01 | 430 401 00 | 6,4 | 405 : 1 | 220 | 300 | 6,7 | 60 | 181 | 42,5 | 15 | 0,43 |
| 430 313 01 | 430 401 00 | 5,4 | 480 : 1 | 220 | 300 | 6,7 | 50 | 195 | 56,5 | 26 | 0,45 |
| 430 314 01 | 430 401 00 | 4,8 | 540 : 1 | 220 | 300 | 6,7 | 55 | 195 | 56,5 | 26 | 0,45 |
| 430 315 01 | 430 401 00 | 3,6 | 720 : 1 | 220 | 300 | 6,7 | 50 | 195 | 56,5 | 26 | 0,45 |
| 430 316 01 | 430 401 00 | 3,2 | 810 : 1 | 220 | 300 | 6,7 | 55 | 195 | 56,5 | 26 | 0,45 |
| 430 317 01 | 430 401 00 | 2,7 | 960 : 1 | 220 | 300 | 6,7 | 45 | 195 | 56,5 | 26 | 0,45 |
| 430 318 01 | 430 401 00 | 2,4 | 1080 : 1 | 220 | 300 | 6,7 | 45 | 195 | 56,5 | 26 | 0,45 |
| 430 319 01 | 430 401 00 | 2,1 | 1215 : 1 | 220 | 300 | 6,7 | 45 | 195 | 56,5 | 26 | 0,45 |
| 430 320 01 | 430 401 00 | 1,8 | 1440 : 1 | 220 | 300 | 6,7 | 45 | 195 | 56,5 | 26 | 0,45 |
| 430 321 01 | 430 401 00 | 1,6 | 1620 : 1 | 220 | 300 | 6,7 | 45 | 195 | 56,5 | 26 | 0,45 |
| 430 322 01 | 430 401 00 | 1,2 | 2160 : 1 | 220 | 300 | 6,7 | 45 | 195 | 56,5 | 26 | 0,45 |
| 430 323 01 | 430 401 00 | 1,06 | 2430 : 1 | 220 | 300 | 6,7 | 45 | 195 | 56,5 | 26 | 0,45 |
| 430 324 01 | 430 401 00 | 0,80 | 3240 : 1 | 240 | 300 | 6,7 | 45 | 195 | 56,5 | 26 | 0,45 |
| 430 325 01 | 430 401 00 | 0,71 | 3645 : 1 | 240 | 300 | 6,7 | 45 | 195 | 56,5 | 26 | 0,45 |
| 430 326 01 | 430 401 00 | 0,60 | 4320 : 1 | 240 | 300 | 6,7 | 45 | 195 | 56,5 | 26 | 0,45 |
| 430 327 01 | 430 401 00 | 0,53 | 4860 : 1 | 240 | 300 | 6,7 | 40 | 195 | 56,5 | 26 | 0,45 |
| 430 328 01 | 430 401 00 | 0,40 | 6480 : 1 | 240 | 300 | 6,7 | 40 | 195 | 56,5 | 26 | 0,45 |
| 430 329 01 | 430 401 00 | 0,35 | 7290 : 1 | 240 | 300 | 6,7 | 40 | 195 | 56,5 | 26 | 0,45 |
| 430 330 01 | 430 401 00 | 0,30 | 8640 : 1 | 240 | 300 | 6,7 | 40 | 195 | 56,5 | 26 | 0,45 |
| 430 331 01 | 430 401 00 | 0,26 | 9720 : 1 | 240 | 300 | 6,7 | 40 | 195 | 56,5 | 26 | 0,45 |

To prevent the gearbox from being overloaded, the max. continuous torques and starting torques stated above must not be exceeded. The effective transmissible torque corresponds to the values at the gearbox shaft. At reversed operation, the load limit must be multiplied with 0.75.

## Small Geared Motors GE/I with DC Motor

**General data:** Light model range, extremely high ratios.

**Housing:** Aluminium die-cast, sealed against lubricant leaks and protected against dust, can be mounted in any position.

**Gearing:** Depending on the arrangement of the gear stages milled from high-grade platic or steel.

**Bearing system:** Motor: roller bearing. Gearbox: sintered bronze slide bearing.

**Lubrication:** Maintenance free grease lubrication.

**Motor:** DC motor for 12 Volt or 24 Volt. Pinion pressed onto motor shaft. Free lead ends. Sense of rotation can be changed by swopping leads over

**Please note: At continuous operation the motor heats up to 50 to 60°C.**

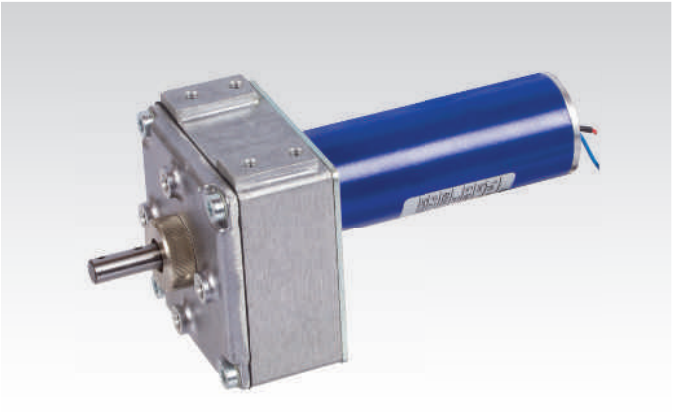

**Ordering details: e.g.: Type,** **Product No. DC Motor**
**Product No. Gearbox**

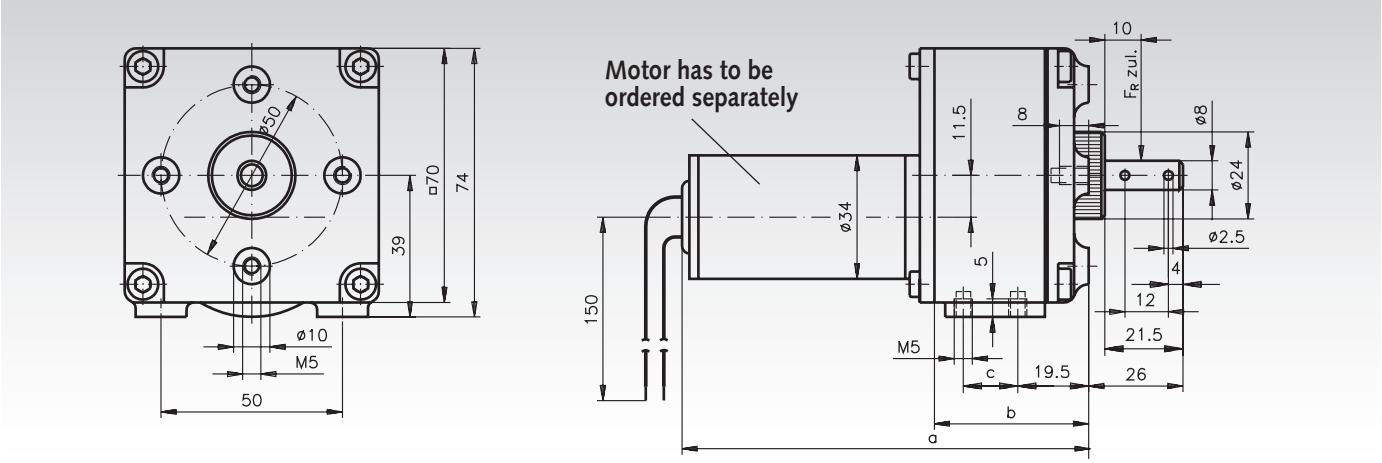


**DC motor 12 Volt: Product No. 430 403 00**

***Motor and gearbox have to be ordered separately.***

**DC motor 24 Volt: Product No. 430 405 00. Weight 0.33 kg**

| Gearbox Product No. | Output Speed Relating to Motor speed 6000 min$^{-1}$ | Ratio i | max. continous Torque Ncm | max. starting Torque Ncm | Nominal Power Watt | Gearbox Efficiency % | Dimensions a mm | b mm | c mm | Weight Gearbox kg |
|---|---|---|---|---|---|---|---|---|---|---|
| **430 301 01** | 400 | 15 : 1 | 30 | 40 | 13 | 80 | 138 | 42,5 | 15 | 0,3 |
| **430 302 01** | 200 | 30 : 1 | 42 | 65 | 8,8 | 72 | 138 | 42,5 | 15 | 0,3 |
| **430 303 01** | 134 | 45 : 1 | 62 | 90 | 8,7 | 72 | 138 | 42,5 | 15 | 0,3 |
| **430 304 01** | 100 | 60 : 1 | 70 | 120 | 7,3 | 70 | 123 | 42,5 | 15 | 0,3 |
| **430 305 01** | 67 | 90 : 1 | 100 | 180 | 7,0 | 70 | 123 | 42,5 | 15 | 0,3 |
| **430 306 01** | 50 | 120 : 1 | 130 | 230 | 6,8 | 65 | 123 | 42,5 | 15 | 0,3 |
| **430 307 01** | 44 | 135 : 1 | 150 | 260 | 7,0 | 65 | 123 | 42,5 | 15 | 0,3 |
| **430 308 01** | 33 | 180 : 1 | 150 | 260 | 5,2 | 65 | 123 | 42,5 | 15 | 0,3 |
| **430 309 01** | 25 | 240 : 1 | 200 | 300 | 5,2 | 60 | 137 | 56,5 | 26 | 0,45 |
| **430 310 01** | 22 | 270 : 1 | 200 | 300 | 4,7 | 60 | 123 | 42,5 | 15 | 0,43 |
| **430 311 01** | 17 | 360 : 1 | 200 | 300 | 3,5 | 60 | 137 | 56,5 | 26 | 0,45 |
| **430 312 01** | 15 | 405 : 1 | 220 | 300 | 3,4 | 60 | 123 | 42,5 | 15 | 0,43 |
| **430 313 01** | 13 | 480 : 1 | 220 | 300 | 2,9 | 50 | 137 | 56,5 | 26 | 0,45 |
| **430 314 01** | 11 | 540 : 1 | 220 | 300 | 2,6 | 55 | 137 | 56,5 | 26 | 0,45 |
| **430 315 01** | 8,3 | 720 : 1 | 220 | 300 | 1,9 | 50 | 137 | 56,5 | 26 | 0,45 |
| **430 316 01** | 7,4 | 810 : 1 | 220 | 300 | 1,7 | 55 | 137 | 56,5 | 26 | 0,45 |
| **430 317 01** | 6,3 | 960 : 1 | 220 | 300 | 1,4 | 45 | 137 | 56,5 | 26 | 0,45 |
| **430 318 01** | 5,6 | 1080 : 1 | 220 | 300 | 1,3 | 45 | 137 | 56,5 | 26 | 0,45 |
| **430 319 01** | 4,9 | 1215 : 1 | 220 | 300 | 1,1 | 45 | 137 | 56,5 | 26 | 0,45 |
| **430 320 01** | 4,2 | 1440 : 1 | 220 | 300 | 0,96 | 45 | 137 | 56,5 | 26 | 0,45 |
| **430 321 01** | 3,7 | 1620 : 1 | 220 | 300 | 0,85 | 45 | 137 | 56,5 | 26 | 0,45 |
| **430 322 01** | 2,8 | 2160 : 1 | 220 | 300 | 0,64 | 45 | 137 | 56,5 | 26 | 0,45 |
| **430 323 01** | 2,5 | 2430 : 1 | 220 | 300 | 0,57 | 45 | 137 | 56,5 | 26 | 0,45 |
| **430 324 01** | 1,9 | 3240 : 1 | 240 | 300 | 0,47 | 45 | 137 | 56,5 | 26 | 0,45 |
| **430 325 01** | 1,6 | 3645 : 1 | 240 | 300 | 0,41 | 45 | 137 | 56,5 | 26 | 0,45 |
| **430 326 01** | 1,4 | 4320 : 1 | 240 | 300 | 0,35 | 45 | 137 | 56,5 | 26 | 0,45 |
| **430 327 01** | 1,2 | 4860 : 1 | 240 | 300 | 0,31 | 40 | 137 | 56,5 | 26 | 0,45 |
| **430 328 01** | 0,9 | 6480 : 1 | 240 | 300 | 0,23 | 40 | 137 | 56,5 | 26 | 0,45 |
| **430 329 01** | 0,8 | 7290 : 1 | 240 | 300 | 0,21 | 40 | 137 | 56,5 | 26 | 0,45 |
| **430 330 01** | 0,7 | 8640 : 1 | 240 | 300 | 0,17 | 40 | 137 | 56,5 | 26 | 0,45 |
| **430 331 01** | 0,6 | 9720 : 1 | 240 | 300 | 0,16 | 40 | 137 | 56,5 | 26 | 0,45 |

To prevent the gearbox from being overloaded, the max. continuous and starting torques stated above must not be exceeded. The effective transmissible torque corresponds to the values at the gearbox shaft.

## Helical Small Geared Motor SF with DC motor, 24V

**Housing:** Steel, zinc-plated.
Can be mounted in any position.
**Teeth:** Steel gears.
**Bearing:** Sintered bronze plain bearings.
**Lubrication:** Maintenance free grease lubrication.
**Motor:** DC motor 24 V. motor speed 6500 $min^{-1}$, interference-free. Change the direction of rotation by switching the polarity.
Protection class acc. to EN 60529: IP 20.
Operating mode as per VDE 0530: S2-10 min.
Permissible ambient operating temperature: -10 to +60°C.

Ideal drive for short term operation, e.g. for actuating device.

**Ordering Details: e.g.: Type, idle speed, Product No.**

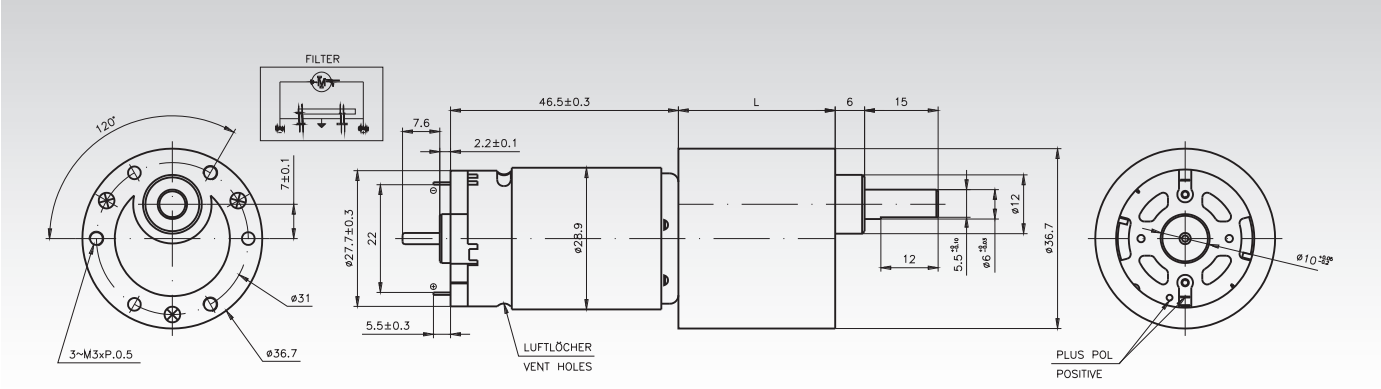


| Product No. 24V | Idle Speed $n_0$ $min^{-1}$ | Nominal Speed $n_N$ $min^{-1}$ | Nominal Torque $M_N$ Nm | Nominal Current $I_N$ A | Nominal Power $P_N$ W | Tightening Torque $M_A$ Nm | Ratio i | Dimension L mm | Weight g |
|---|---|---|---|---|---|---|---|---|---|
| **430 460 24** | 2 | 1,5 | 2,00 | 0,4 | 0,31 | 2,1 | 3000:1 | 32,0 | 220 |
| **430 461 24** | 6 | 5,0 | 1,60 | 0,4 | 0,84 | 1,9 | 1000:1 | 29,5 | 210 |
| **430 463 24** | 27 | 22,0 | 1,30 | 0,4 | 2,99 | 1,6 | 250:1 | 27,0 | 200 |
| **430 464 24** | 43 | 38,0 | 0,80 | 0,4 | 3,18 | 1,2 | 150:1 | 27,0 | 200 |
| **430 466 24** | 90 | 75,0 | 0,45 | 0,6 | 3,53 | 0,8 | 75:1 | 24,5 | 200 |
| **430 467 24** | 130 | 115,0 | 0,30 | 0,6 | 3,61 | 0,6 | 50:1 | 24,5 | 200 |
| **430 468 24** | 210 | 190,0 | 0,18 | 0,6 | 3,58 | 0,4 | 30:1 | 22,0 | 190 |
| **430 469 24** | 610 | 530,0 | 0,10 | 0,6 | 5,55 | 0,2 | 10:1 | 19,5 | 190 |

Permissible radial shaft load $F_R$: (10 mm from bearing collar): 9.8 N.
Permissible axial shaft load $F_A$: 6.7 N.

### Note

All values are averages, measured with the motor cold. Deviations of 15% are possible.
To prevent the gearbox from being overloaded, the stated limit loads must not be exceeded.

Other types (other speeds, optional incremental encoder) available on request.

**Speed controllers**
**Page 696**

## Small Worm Geared Motors SFS Size 2 with DC Motor 12 or 24V

**Housing:** Motor: Steel, zinc-plated. Gearbox: Aluminium.
Can be mounted in any position.
**Teeth:** Worm gear set made from plastic.
**Bearing:** Output side, plain bearing, motor side, ball bearing.
**Lubrication:** Maintenance free grease lubrication.
**Motor:** DC motor 12 V or 24 V, interference-free.
Change the direction of rotation by switching the polarity.
Protection class acc. to EN 60529: IP 30.
Operating mode as per VDE 0530: S2-10 min.
Permissible ambient operating temperature: -10 to +60°C.

Ideal drive for short term operation, e.g. for actuating devices.

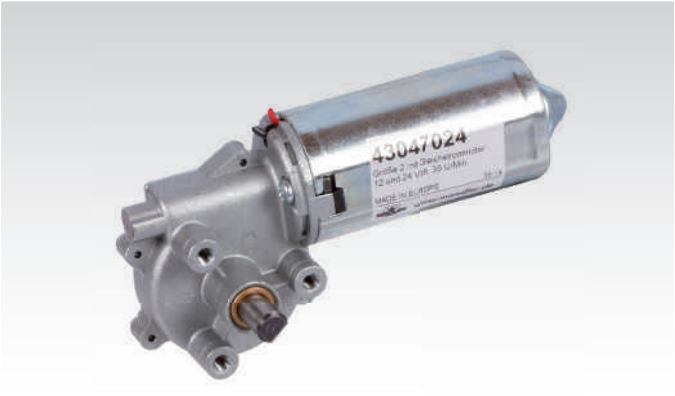


**Ordering Details: e.g.: Type, idle speed, Product No.**

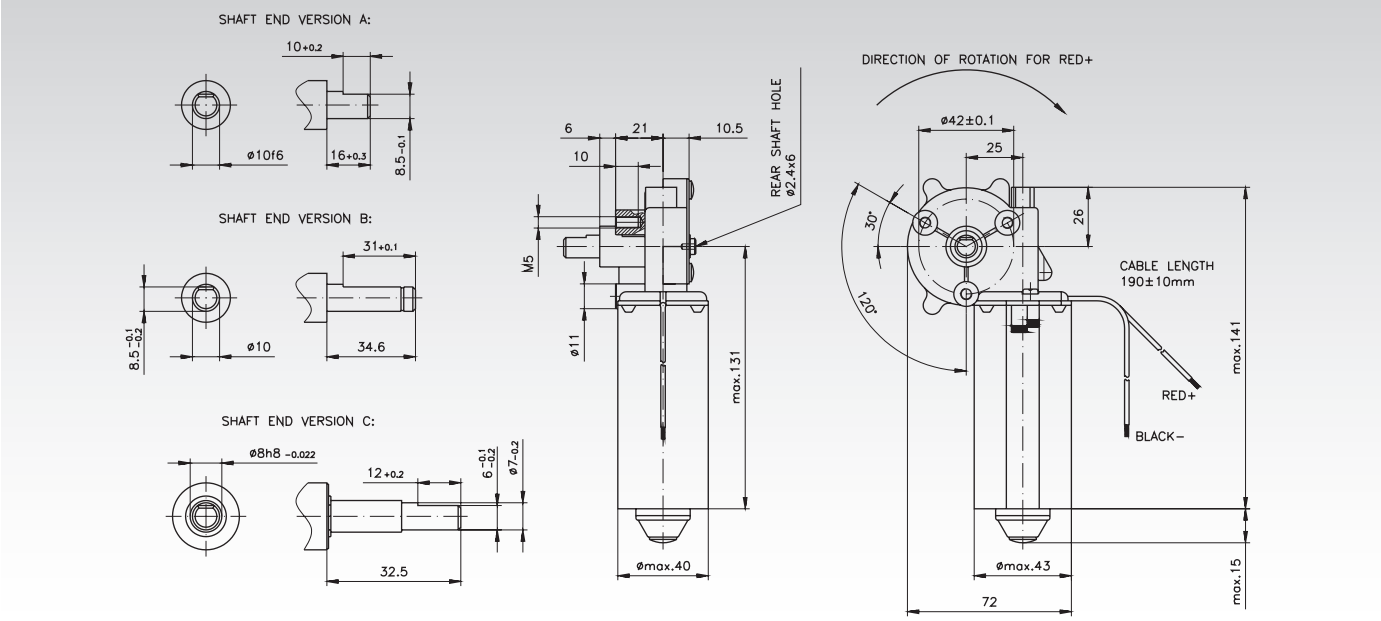


| Product No. | Nominal Voltage V | Idle Speed $n_0$ $min^{-1}$ | Nominal Speed $n_N$ $min^{-1}$ | Nominal Torque $M_N$ Nm | Nominal Current $I_N$ A | Nominal Power $P_N$ W | Tightening Torque $M_A$ Nm | Ratio i | Shaft-End Type | Weight g |
|---|---|---|---|---|---|---|---|---|---|---|
| **430 470 12** | 12 | 25 | 21,0 | 1,00 | 0,9 | 2,1 | 6 | 62:1 | A | 700 |
| **430 470 24** | 24 | 35 | 28,0 | 2,00 | 1,0 | 5,9 | 10 | 62:1 | A | 700 |
| **430 471 24** | 24 | 50 | 40,0 | 2,00 | 1,48 | 8,4 | 10 | 62:1 | B | 700 |
| **430 472 24** | 24 | 95 | 69,0 | 5,00 | 3,1 | 35,0 | 18 | 62:1 | A | 700 |
| **430 473 24** | 24 | 140 | 124,0 | 2,00 | 3,0 | 26,0 | 18 | 62:1 | B | 700 |
| **430 474 24** | 24 | 210 | 158,0 | 2,00 | 4,0 | 33,0 | 8 | 59:3 | C | 700 |

Permissible radial shaft load $F_R$: 60 N (10 mm from bearing collar).
Permissible axial shaft load $F_A$: 10 N tensile load or 15 N compressive load.

### Note

All values are averages, measured with the motor cold. Deviations of 10% are possible.
To prevent the gearbox from being overloaded, the stated limit loads must not be exceeded.

Other types on request.

### Factory interference suppression

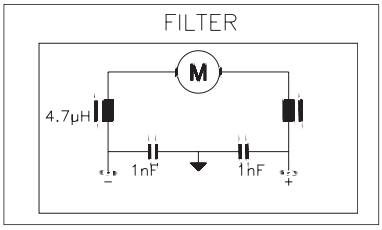

## Small Worm Geared Motors SFS Size 3 with DC Motor 12 or 24V

**Housing:** Motor: Steel, zinc-plated. Gearbox: Aluminium.
Can be mounted in any position.
**Teeth:** Worm gear set made from plastic.
**Bearing:** Output side, plain bearing, motor side, ball bearing.
**Lubrication:** Maintenance free grease lubrication.
**Motor:** DC motor 12 V or 24 V, interference-free.
Change the direction of rotation by switching the polarity.
Protection class acc. to EN 60529: IP 30.
Operating mode as per VDE 0530: S2-10 min.
Permissible ambient operating temperature: -10 to +60°C.

**Caution: Output shaft and shaft form side as per the table.**

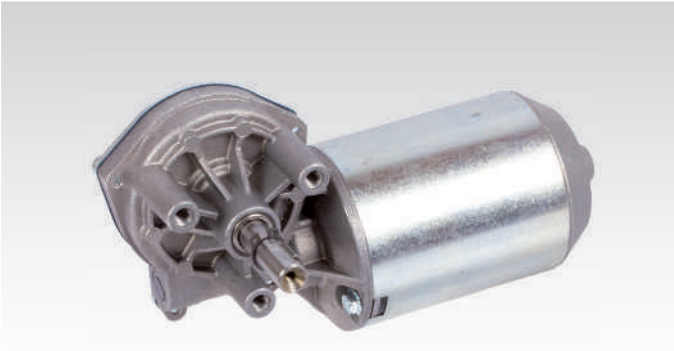

**Picture:**
**Output shaft right**

**Ordering Details: e.g.: Type, idle speed, Product No.**

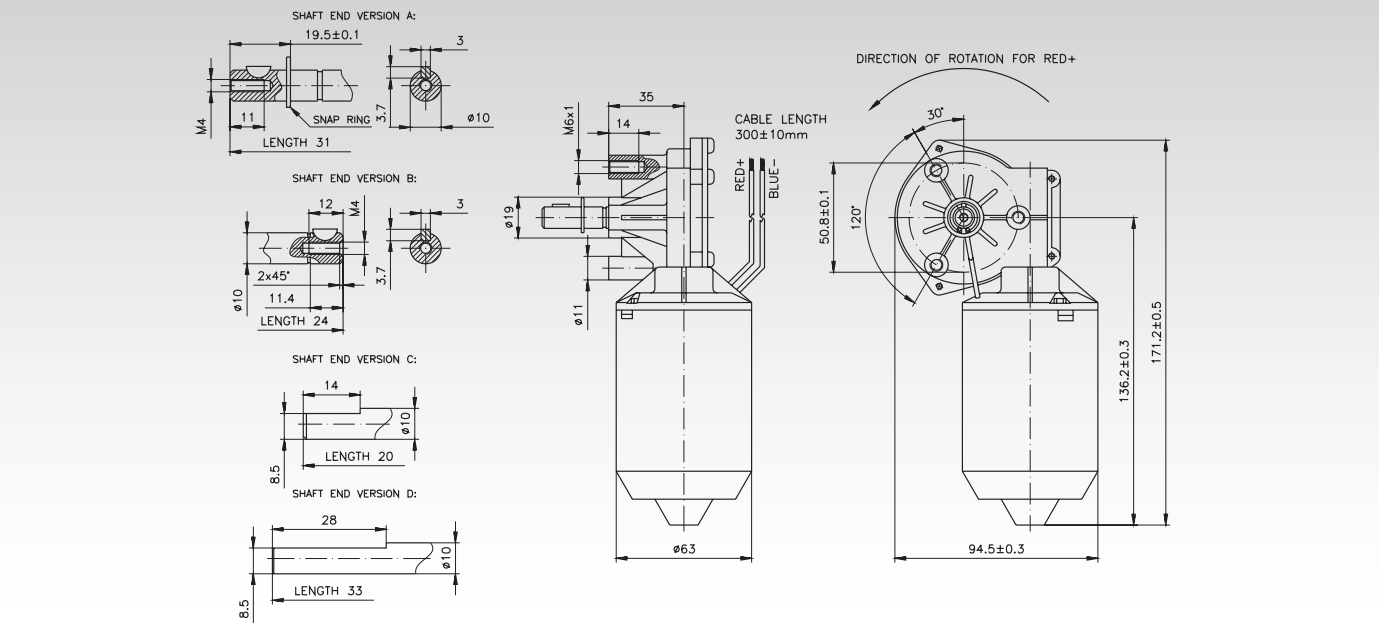


| Product No. 24V | Idle Speed $n_0$ $min^{-1}$ | Nominal Speed $n_N$ $min^{-1}$ | Nominal Torque $M_N$ Nm | Nominal Current $I_N$ A | Nominal Power $P_N$ W | Tightening Torque $M_A$ Nm | Ratio i | Output-Shaft Side | Shaft-end Type | Weight g |
|---|---|---|---|---|---|---|---|---|---|---|
| **430 480 24** | 13 | 7,4 | 6,0 | 1,0 | 4,6 | 14,0 | 69:1 | right | A | 1100 |
| **430 481 24** | 35 | 24,7 | 10,0 | 2,9 | 26,0 | 34,0 | 69:1 | right | B | 1100 |
| **430 482 24** | 50 | 41,0 | 2,5 | 1,0 | 11,0 | 14,0 | 52:2 | left | A | 1100 |
| **430 484 24** | 110 | 88,0 | 3,3 | 2,9 | 30,0 | 17,0 | 52:2 | left | A | 1100 |
| **430 486 24** | 180 | 170,0 | 1,3 | 2,4 | 23,0 | 25,0 | 52:2 | right | A | 1100 |
| **430 487 24** | 240 | 192,0 | 1,5 | 2,7 | 30,0 | 7,5 | 44:4 | left | C | 1100 |
| **430 488 24** | 280 | 249,0 | 1,0 | 3,0 | 26,0 | 9,0 | 44:4 | left | D | 1100 |
| **430 489 24** | 580 | 543,0 | 1,0 | 5,3 | 56,0 | 16,0 | 41:4 | right | D | 1100 |

Permissible radial shaft load $F_R$: 120 N (10 mm from bearing collar).
Permissible axial shaft load $F_A$: 15 N tensile load or 10 N compressive load.

### Note

All values are averages, measured with the motor cold. Deviations of 10% are possible.
To prevent the gearbox from being overloaded, the stated limit loads must not be exceeded.

Other types on request.

### Factory interference suppression

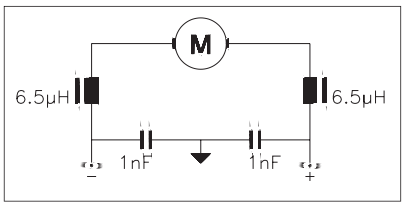


*Speed controllers*
*Page 696*

## Small Worm Geared Motors Type SG with Permanent Magnet DC Motor 24V

**Housing:** Aluminium, sealed against lubricant leaks and protected against dust, can be mounted in any position.
**Output shaft:** Optional on side 1 or side 2.
**Teeth:** Worm gear made from special brass, worm made from steel, hardened and ground.
**Bearing:** Motor and gearbox with roller bearing.
**Lubrication:** Maintenance free grease lubrication.
**Motor:** Permanent magnet DC Motor 24 V.
Nominal motor speed 3,000 min$^{-1}$, with relatively constant speed characteristics. Free lead ends. Sense of rotation can be changed by swapping leads over.
Protection class IP 40. Insulation class B. Operating mode S1.

**Ordering Details: e.g.: Type, Power, Output Side, Output Speed, Product No.**

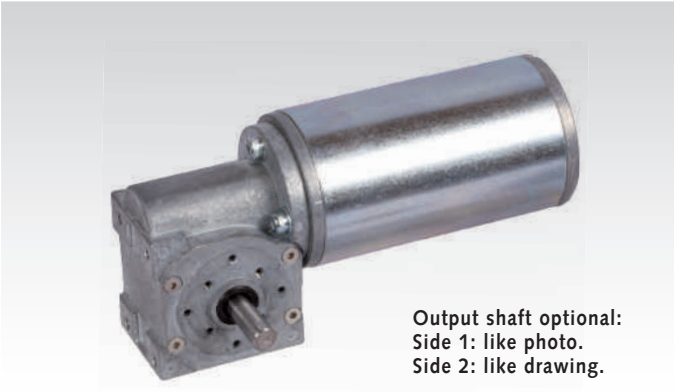

**Output shaft optional:**
**Side 1: like photo.**
**Side 2: like drawing.**

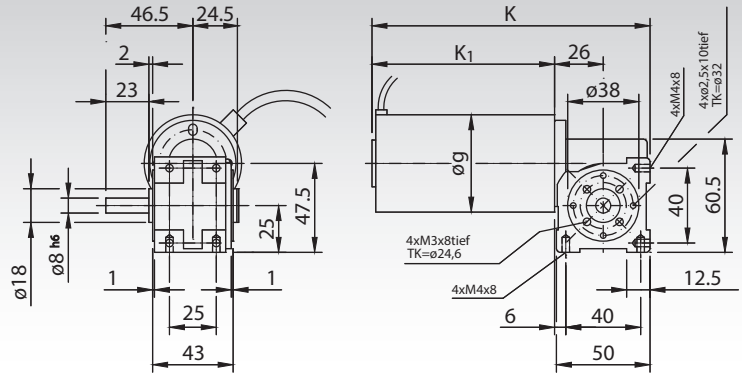


**Output shaft optional:**
**Side 1: like photo.**
**Side 2: like drawing.**

Other dimensions:

| Power Watt | g mm | k mm | $k_1$ mm |
|---|---|---|---|
| **28** | 52 | 149 | 98 |
| **54** | 52 | 179 | 128 |

**Dimensions without stated tolerances are non-binding!**

**Load Bearing Capacity of the Output Shaft:**
**radial 40 N, axial 40 N**

### Motor Data 28 Watt, 3000 min$^{-1}$, ca. 2.0 A at 24 Volt

| Product No. Output Side 1 | Product No. Output Side 2 | Output-Speed min$^{-1}$ | Ratio i = | Torque at the Output Shaft effective Nm | max. permissible* Nm | Weight kg |
|---|---|---|---|---|---|---|
| **430 491 01** | **430 492 01** | 44 | 68 : 1 | 2,1 | 4,2 | 1,3 |
| **430 491 02** | **430 492 02** | 75 | 40 : 1 | 1,2 | 4,7 | 1,3 |
| **430 491 03** | **430 492 03** | 100 | 30 : 1 | 1,0 | 4,3 | 1,3 |
| **430 491 04** | **430 492 04** | 143 | 21 : 1 | 0,9 | 4,1 | 1,3 |
| **430 491 05** | **430 492 05** | 200 | 15 : 1 | 0,7 | 3,7 | 1,3 |
| **430 491 06** | **430 492 06** | 286 | 10,5 : 1 | 0,6 | 4,1 | 1,3 |
| **430 491 07** | **430 492 07** | 429 | 7 : 1 | 0,4 | 4,3 | 1,3 |
| **430 491 08** | **430 492 08** | 1000 | 3 : 1 | 0,2 | 2,6 | 1,3 |

* Stability related max. torque.

### Motor Data 54 Watt, 3000 min$^{-1}$, ca. 3.0 A at 24 Volt

| Product No. Output Side 1 | Product No. Output Side 2 | Output-Speed min$^{-1}$ | Ratio i = | Torque at the Output Shaft effective Nm | max. permissible* Nm | Weight kg |
|---|---|---|---|---|---|---|
| **430 491 09** | **430 492 09** | 44 | 68 : 1 | 4,0 | 4,2 | 1,6 |
| **430 491 10** | **430 492 10** | 75 | 40 : 1 | 2,3 | 4,7 | 1,6 |
| **430 491 11** | **430 492 11** | 100 | 30 : 1 | 2,0 | 4,3 | 1,6 |
| **430 491 12** | **430 492 12** | 143 | 21 : 1 | 1,7 | 4,1 | 1,6 |
| **430 491 13** | **430 492 13** | 200 | 15 : 1 | 1,4 | 3,7 | 1,6 |
| **430 491 14** | **430 492 14** | 286 | 10,5 : 1 | 1,1 | 4,1 | 1,6 |
| **430 491 15** | **430 492 15** | 429 | 7 : 1 | 0,9 | 4,3 | 1,6 |
| **430 491 16** | **430 492 16** | 1000 | 3 : 1 | 0,4 | 2,6 | 1,6 |

* Stability related max. torque.

## Small Worm Geared Motors Type SG-H with Permanent magnet DC Motor 24V, with Hollow Shaft

**Housing:** Aluminium, sealed against lubricant leaks and protected against dust, can be mounted in any position.
**Output shaft:** Hollow shaft.
**Teeth:** Worm gear made from special brass, worm made from steel, hardened and ground.
**Bearing:** Motor and gearbox with roller bearing.
**Lubrication:** Maintenance free grease lubrication.
**Motor:** Permanent magnet DC Motor 24 V.
Nominal motor speed 3,000 min$^{-1}$, with relatively constant speed characteristics. Free lead ends. Sense of rotation can be changed by swapping leads over.
Protection class IP 40. Insulation class B. Operating mode S1.

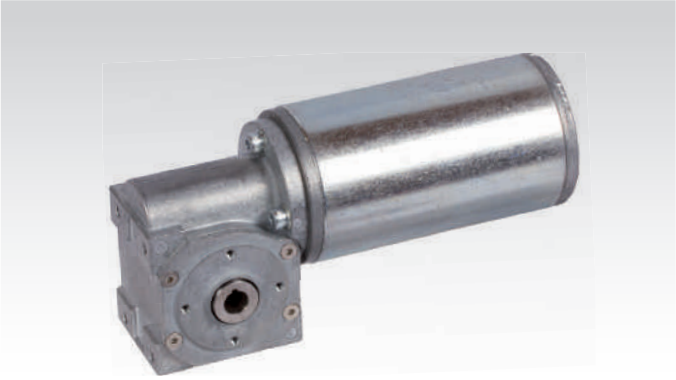

**Ordering Details: e.g.: Type, Power, Output Speed, Product No.**

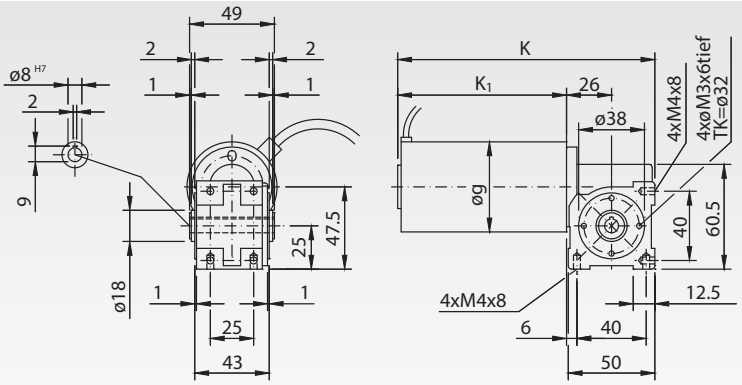


**With hollow shaft**

Other dimensions:

| Power Watt | g mm | k mm | $k_1$ mm |
|---|---|---|---|
| **28** | 52 | 149 | 98 |
| **54** | 52 | 179 | 128 |

**Dimensions without stated tolerances are non-binding!**

**Load Bearing Capacity of the Output Shaft: radial 40 N, axial 40 N**

### Motor Data 28 Watt, 3000 min$^{-1}$, ca. 2.0 A at 24 Volt

| Product No. with Hollow Shaft | Output-Speed min$^{-1}$ | Ratio i = | Torque at the Output Shaft effective Nm | max. permissible* Nm | Weight kg |
|---|---|---|---|---|---|
| **430 490 01** | 44 | 68 : 1 | 2,1 | 4,2 | 1,3 |
| **430 490 03** | 100 | 30 : 1 | 1,0 | 4,3 | 1,3 |
| **430 490 05** | 200 | 15 : 1 | 0,7 | 3,7 | 1,3 |
| **430 490 07** | 429 | 7 : 1 | 0,4 | 4,3 | 1,3 |

* Stability related max. torque.

### Motor Data 54 Watt, 3000 min$^{-1}$, ca. 3.0 A at 24 Volt

| Product No. with Hollow Shaft | Output-Speed min$^{-1}$ | Ratio i = | Torque at the Output Shaft effective Nm | max. permissible* Nm | Weight kg |
|---|---|---|---|---|---|
| **430 490 09** | 44 | 68 : 1 | 4,0 | 4,2 | 1,6 |
| **430 490 11** | 100 | 30 : 1 | 2,0 | 4,3 | 1,6 |
| **430 490 13** | 200 | 15 : 1 | 1,4 | 3,7 | 1,6 |
| **430 490 15** | 429 | 7 : 1 | 0,9 | 4,3 | 1,6 |

* Stability related max. torque.

## Planetary Small Geared Motor PE with DC Motor, Size 1

**Housing:** Steel, zinc-plated, sealed against lubricant leaks and protected against dust, can be mounted in any position.
**Gearbox:** 1st gearbox stage: plastic gears, other gears made from steel.
**Bearing:** Motor roller bearing. Gearbox: sintered bronze plain bearing.
**Lubrication:** Maintenance free grease lubrication.
**Motor:** DC motor 24 V. Nominal motor speed 6,000 $min^{-1}$,
Pinion milled into motor shaft. Free lead ends.
Sense of rotation can be changed by swapping leads over.
Protection class according to VDE 0530: IP 21.
Insulation class according to VDE 0530: E.
Operating mode as per VDE 0530: S1.

**Ordering Details: e.g.: Type, Size 1, Voltage, Output Speed, Product No.**

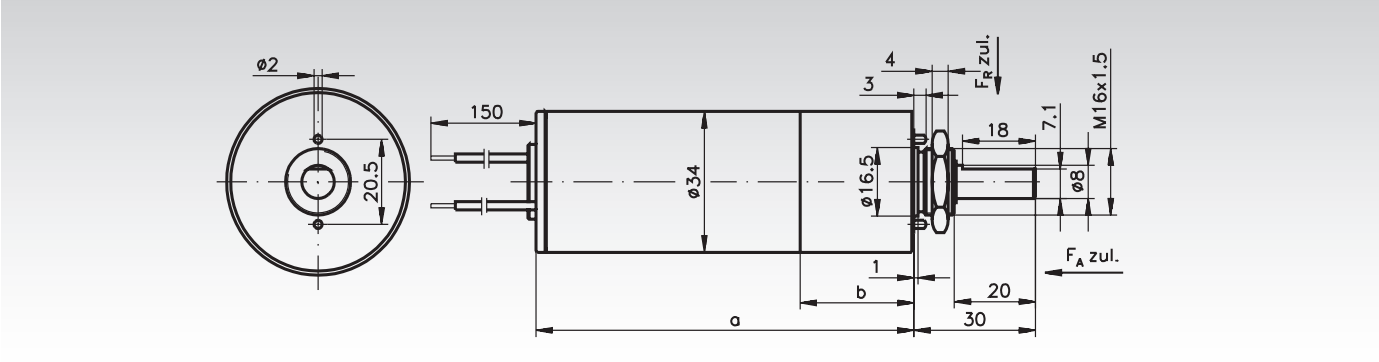


### Size 1

| Product No. 24 V | Nominal Output Speed $min^{-1}$ | Ratio i | max. continous Torque Nm | max. Starting Torque Nm | Nominal Motor Power W | Output Power W | Gearbox Efficiency % | a mm | b mm | Weight kg |
|---|---|---|---|---|---|---|---|---|---|---|
| **430 440 24** | 200 | 30:1 | 0,46 | 0,6 | 12 | 9,6 | 80 | 141 | 27 | 0,55 |
| **430 441 24** | 67 | 90:1 | 1,20 | 1,8 | 12 | 8,4 | 70 | 148 | 34 | 0,6 |
| **430 442 24** | 50 | 120:1 | 1,60 | 2,2 | 12 | 8,4 | 70 | 148 | 34 | 0,6 |
| **430 443 24** | 29 | 210:1 | 2,80 | 3,3 | 12 | 8,4 | 70 | 148 | 34 | 0,6 |
| **430 444 24** | 22 | 270:1 | 2,90 | 3,3 | 10 | 6,7 | 65 | 155 | 41 | 0,65 |

Permissible radial shaft load $F_R$: 30 N (middle shaft).
Permissible axial shaft load $F_A$: 0 N.
Tolerances +/- 10%.

### Note

The efficiency stated in the table is valid for properly run-in gearboxes at operating temperature. To prevent the gearbox from being overloaded, the stated limit loads must not be exceeded. At reversed operation the limit loads must be multiplied with the factor 0.75.

Also available as an option with 12 V motors and larger gear ratio up to 54880:1.

## Planetary Small Geared Motor PE with DC Motor, Size 2

**Housing:** Steel, zinc-plated, sealed against lubricant leaks and protected against dust, can be mounted in any position.
**Gearbox:** 1st gearbox stage: plastic gears, other gears made from steel.
**Bearing:** Motor roller bearing. Gearbox roller bearing / plain bearing.
**Lubrication:** Maintenance free grease lubrication.
**Motor:** DC motor 24 V. Nominal motor speed 3,000 $min^{-1}$, Pinion milled into motor shaft. Free lead ends. Sense of rotation can be changed by swapping leads over.
Protection class according to VDE 0530: IP 41.
Insulation class according to VDE 0530: F.
Operating mode as per VDE 0530: S1.

**Ordering Details: e.g.: Type, Size 2, Voltage, Output Speed, Product No.**

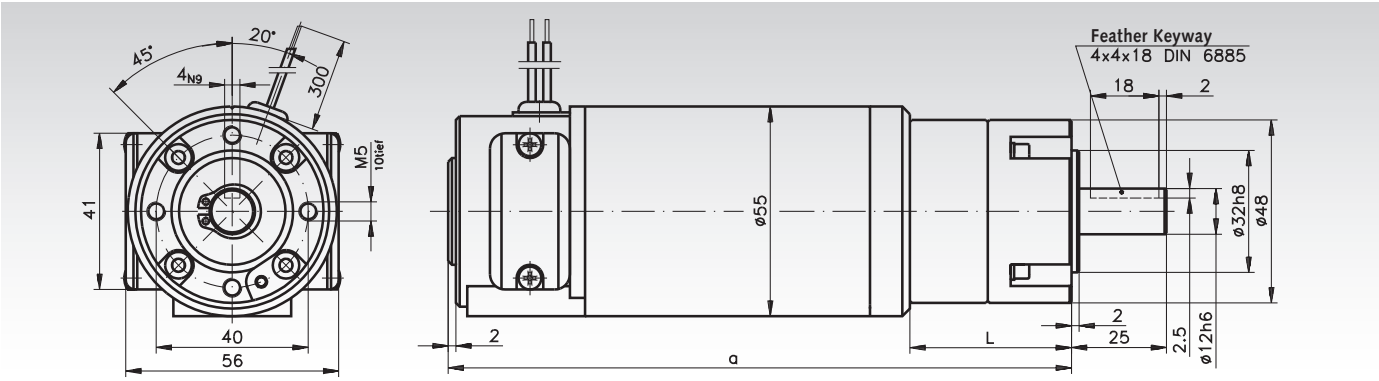


### Size 2

| Product No. 24 V | Nominal Output Speed $min^{-1}$ | Ratio i | max. continous Torque Nm | max. Starting Torque Nm | Nominal Motor Power W | Output Power W | Gearbox Efficiency % | a mm | b mm | Weight kg |
|---|---|---|---|---|---|---|---|---|---|---|
| **430 450 24** | 600 | 5:1 | 1,00 | 3,0 | 54 | 49 | 90 | 164,5 | 43,0 | 1,5 |
| **430 451 24** | 500 | 6:1 | 1,30 | 3,5 | 54 | 49 | 90 | 164,5 | 43,0 | 1,5 |
| **430 452 24** | 392 | 7,66:1 | 1,00 | 3,0 | 46 | 41 | 90 | 164,5 | 43,0 | 1,5 |
| **430 453 24** | 143 | 21:1 | 3,20 | 12,0 | 55 | 47 | 85 | 181,0 | 59,5 | 1,6 |
| **430 454 24** | 120 | 25:1 | 4,00 | 14,5 | 55 | 47 | 85 | 181,0 | 59,5 | 1,6 |
| **430 455 24** | 100 | 30:1 | 4,80 | 14,5 | 55 | 47 | 85 | 181,0 | 59,5 | 1,6 |
| **430 456 24** | 83 | 36:1 | 5,50 | 16,0 | 55 | 47 | 85 | 181,0 | 59,5 | 1,6 |
| **430 457 24** | 65 | 46:1 | 5,60 | 16,0 | 45 | 38 | 85 | 181,0 | 59,5 | 1,6 |
| **430 458 24** | 51 | 59:1 | 6,00 | 16,0 | 48 | 32 | 85 | 181,0 | 59,5 | 1,6 |

Permissible radial shaft load $F_R$: from i=5:1 to i=7,66:1: 112 N; from i=21:1 to i=59:1: 150 N (always middle shaft).
Permissible axial shaft load $F_A$: from i=5:1 to i=7,66:1: 100 N; from i=21:1 to i=59:1: 110 N.
Tolerances +/- 10%.

### Note

The efficiency stated in the table is valid for properly run-in gearboxes at operating temperature. To prevent the gearbox from being overloaded, the stated limit loads must not be exceeded. At reversed operation the limit loads must be multiplied with the factor 0.75.

Optionally also available with DC speed sensor, incremental encoder and brake.

Also available as an option with larger gear ratio up to 450:1.

*Speed controllers*
*Page 696*

## Small Geared Motor SE with DC Motor, Size 1

**Housing:** Aluminium, sealed against lubricant leaks and protected against dust, can be mounted in any position.
**Teeth:** Worm gear made from plastic, worm made from steel, ground. Not self-locking.
**Bearing:** Motor and gearbox with roller bearing.
**Lubrication:** Maintenance free grease lubrication.
**Motor:** DC Motor 12 V or 24 V.
Nominal motor speed 6,000 $min^{-1}$, worm pinned on motor shaft. Free lead ends. Sense of rotation can be changed by swapping leads over.
Protection class according to VDE 0530: IP 21
Insulation class according to VDE 0530: E
Operating mode as per VDE 0530: S1

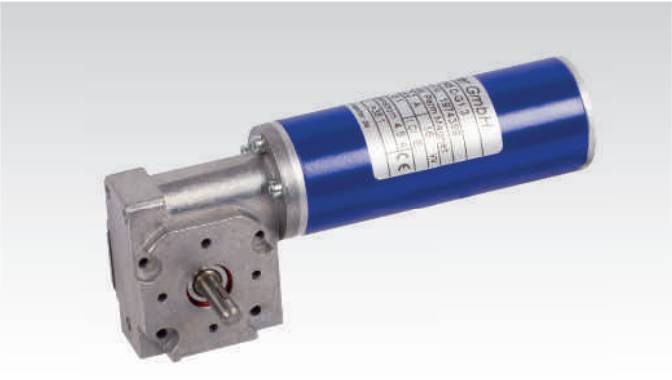

**Ordering Details: e.g.: Type, Size 1, Voltage, Output Speed, Product No.**

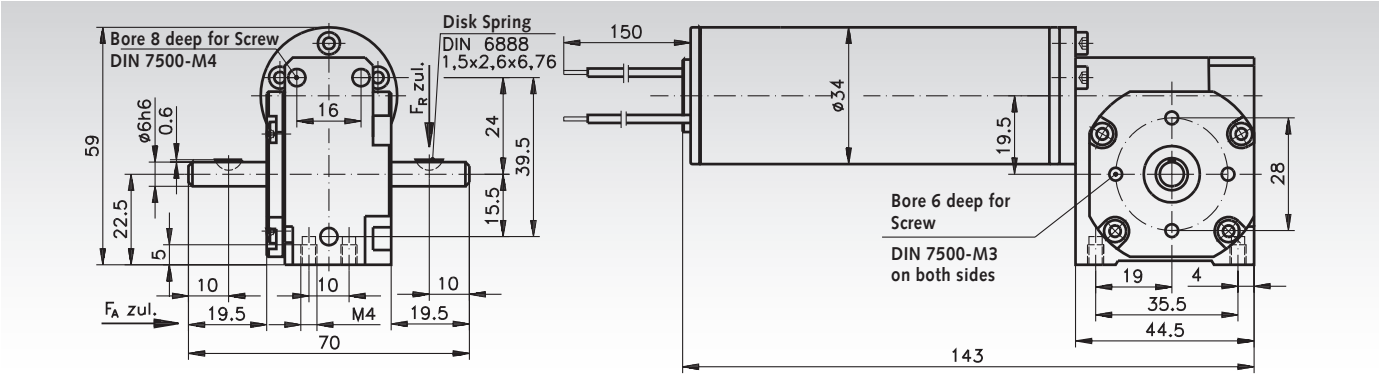


## Size 1

| Product No. 12 V | Product No. 24 V | Nominal Output Speed $min^{-1}$ | Ratio i | max. continous Torque Nm | max. Starting Torque Nm | Nominal Motor Power W | Output Power W | Gearbox Efficiency % | Weight kg |
|---|---|---|---|---|---|---|---|---|---|
| **430 410 12** | **430 410 24** | 822 | 7,3:1 | 0,15 | 0,83 | 16 | 13 | 79 | 0,52 |
| **430 411 12** | **430 411 24** | 522 | 11,5:1 | 0,23 | 1,3 | 16 | 12 | 77 | 0,52 |
| **430 412 12** | **430 412 24** | 400 | 15:1 | 0,28 | 1,7 | 16 | 12 | 73 | 0,52 |
| **430 413 12** | **430 413 24** | 261 | 23:1 | 0,41 | 2,0 | 16 | 11 | 70 | 0,52 |
| **430 414 12** | **430 414 24** | 200 | 30:1 | 0,55 | 2,0 | 16 | 11 | 66 | 0,52 |
| **430 415 12** | **430 415 24** | 158 | 38:1 | 0,63 | 1,2 | 16 | 10 | 65 | 0,52 |

Permissible radial shaft load $F_R$: 30 N (middle shaft).
Permissible axial shaft load $F_A$: 12 N.
Tolerances +/- 10%.

## Note

The efficiency stated in the table is valid for properly run-in gearboxes at operating temperature. To prevent the gearbox from being overloaded, the stated limit loads must not be exceeded. At reversed operation the limit loads must be multiplied with the factor 0.75.

## Small Geared Motor SE with DC Motor, Size 2

**Housing:** Aluminium, sealed against lubricant leaks and protected against dust, can be mounted in any position.
**Teeth:** Worm gear made from plastic, worm made from steel, ground. Not self-locking.
**Bearing:** Motor and gearbox with roller bearing.
**Lubrication:** Maintenance free grease lubrication.
**Motor:** DC motor 24 V.
Nominal motor speed 3,000 $min^{-1}$, worm pinned on motor shaft. Free lead ends. Sense of rotation can be changed by swapping leads over. *Brake on request.
Protection class according to VDE 0530: IP 41.
Insulation class according to VDE 0530: F.
Operating mode as per VDE 0530: S1.

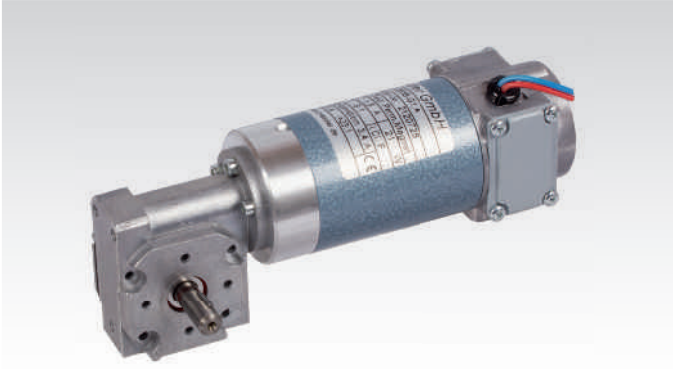

**Ordering Details: e.g.: Type, Size 2, Voltage, Output Speed, Product No.**

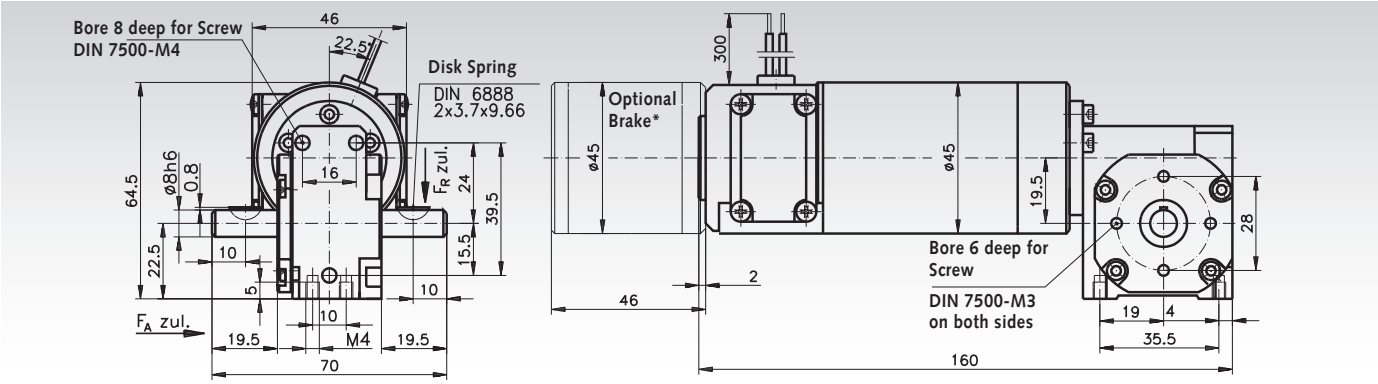


## Size 2

| Product No. 24 V | Nominal Output Speed $min^{-1}$ | Ratio i | max. continuous Torque Nm | Max. Starting Torque Nm | Nominal Motor power W | Output Power W | Gearbox Efficiency % | Weight kg |
|---|---|---|---|---|---|---|---|---|
| **430 420 24** | 411 | 7,3:1 | 0,35 | 2,0 | 20 | 15 | 76 | 0,8 |
| **430 421 24** | 261 | 11,5:1 | 0,50 | 2,0 | 19 | 14 | 73 | 0,8 |
| **430 422 24** | 200 | 15:1 | 0,65 | 2,0 | 20 | 14 | 70 | 0,8 |
| **430 423 24** | 130 | 23:1 | 1,00 | 2,0 | 21 | 14 | 67 | 0,8 |
| **430 424 24** | 100 | 30:1 | 1,10 | 2,0 | 19 | 12 | 63 | 0,8 |
| **430 425 24** | 79 | 38:1 | 1,05 | 1,2 | 15 | 9 | 60 | 0,8 |

Permissible radial shaft load $F_R$: 110 N (middle shaft).
Permissible axial shaft load $F_A$: 60 N.
Tolerances +/- 10%.

## Note

The efficiency stated in the table is valid for properly run-in gearboxes at operating temperature. To prevent the gearbox from being overloaded, the stated limit loads must not be exceeded. At reversed operation the limit loads must be multiplied with the factor 0.75.

* Optionally also available with DC speed sensor, incremental encoder and brake.

*Speed controllers*
*Page 696*

## Small Geared Motor SE with DC Motor, Size 3

**Housing:** Aluminium, sealed against lubricant leaks and protected against dust, can be mounted in any position.
**Teeth:** Worm gear made from plastic, worm made from steel, ground. Not self-locking.
**Bearing:** Motor and gearbox with roller bearing.
**Lubrication:** Maintenance free grease lubrication.
**Motor:** DC motor 24 V.
Worm pinned on motor shaft. Free lead ends.
Sense of rotation can be changed by swapping leads over.
Protection class according to VDE 0530: IP 41.
Insulation class according to VDE 0530: F.
Operating mode as per VDE 0530: S1.

**Ordering Details: e.g.: Type, Size 3, Voltage, Output Speed, Product No.**

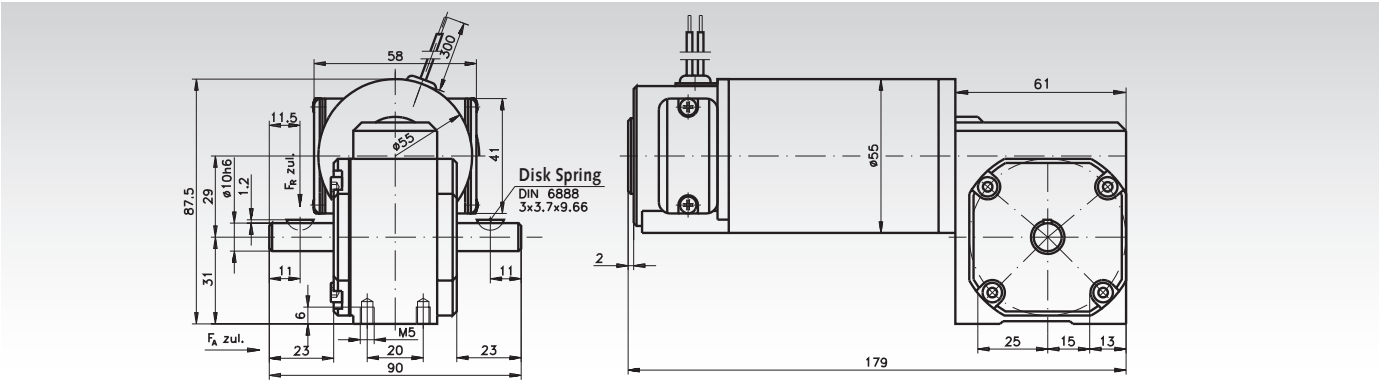


## Size 3

| Product No. 24 V | Nominal Output Speed $min^{-1}$ | Ratio i | Nominal Motor Speed $min^{-1}$ | max. continous Torque Nm | max. Starting Torque Nm | Nominal Motor Power W | Output Power W | Gearbox Efficiency % | Weight kg |
|---|---|---|---|---|---|---|---|---|---|
| **430 430 24** | 833 | 4,8:1 | 4000 | 0,70 | 7,0 | 70 | 57 | 82 | 1,6 |
| **430 431 24** | 625 | 4,8:1 | 3000 | 0,70 | 7,0 | 55 | 45 | 82 | 1,6 |
| **430 432 24** | 429 | 9,33:1 | 4000 | 1,30 | 7,0 | 70 | 56 | 80 | 1,6 |
| **430 433 24** | 333 | 12:1 | 4000 | 1,60 | 7,0 | 70 | 56 | 80 | 1,6 |
| **430 434 24** | 276 | 14,5:1 | 4000 | 1,95 | 7,0 | 70 | 56 | 80 | 1,6 |
| **430 435 24** | 200 | 20:1 | 4000 | 2,40 | 8,0 | 70 | 49 | 70 | 1,6 |
| **430 436 24** | 160 | 25:1 | 4000 | 2,70 | 8,0 | 68 | 45 | 66 | 1,6 |
| **430 437 24** | 133 | 30:1 | 4000 | 3,00 | 7,0 | 63 | 42 | 67 | 1,6 |
| **430 438 24** | 100 | 30:1 | 3000 | 3,20 | 7,0 | 52 | 34 | 66 | 1,6 |
| **430 439 24** | 83 | 36:1 | 3000 | 2,40 | 5,0 | 34 | 21 | 62 | 1,6 |

Permissible radial shaft load $F_R$: 150 N (middle shaft).
Permissible axial shaft load $F_A$: 60 N.
Tolerances +/- 10%.

## Note

The efficiency stated in the table is valid for properly run-in gearboxes at operating temperature. To prevent the gearbox from being overloaded, the stated limit loads must not be exceeded. At reversed operation the limit loads must be multiplied with the factor 0.75.

Optionally also available with DC speed sensor, incremental encoder and brake.

**Housing:** Aluminium, corrosion-inhibiting coating, with mounting holes for foot and flange mounting and with removable twist cap for easy service.
**Gearing:** Hardened and ground.
**Lubrication:** Synthetic oil (lubricated for life).
**Motor:** Standard three-phase motor with small flange B14, 230/400V, 50 Hz.

**From 0.75 kW in efficiency class IE2.**

Other Motor versions (AC Motor, posistor, forced ventilation, break etc.) on request.

Light-weight, high-quality model range with many mounting options.

These maintenance free, geared motors without ventilation can be used in **any mounting position.**

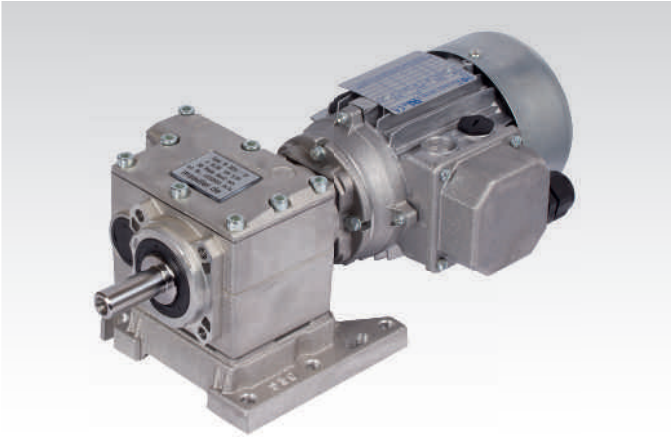

**Variable mounting:**
These geared motors are supplied with a screwed-on foot mounting. If flange mounting is required or if the motor is to be mounted on an existing base plate, this foot can simply be unscrewed.

**Retrofittable flange:**
If the motor is to be flange mounted on the output side, a flange can be srewed on by the customer. These flanges B5 are available in several diameters and have to be ordered separately.

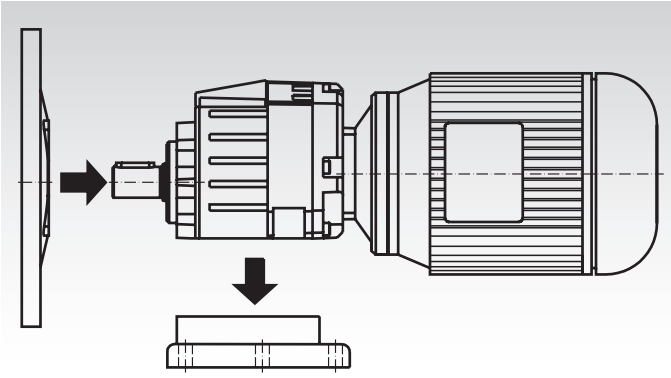

**Ordering details: e.g.: Prod. No., Type, Motor Power, Output Speed**
**If required: Output Flange, Prod. No., Diameter**

| **Product No.** Model B3 | P kW | $n_2$ $min^{-1}$ | $M_a$ Nm | $f_B$ | $i_{ges.}$ | $F_R$ 1) N | $F_A$ 2) N | Gearbox Size | Motor Size | Weight kg |
|---|---|---|---|---|---|---|---|---|---|---|
| **432 009 05** | 0,09 | 5,1 | 157 | 1,0 | 177,09 | 3000 | 600 | 40/3 | 63A6 | 10,10 |
| **432 009 10** | 0,09 | 7,9 | 101 | 1,6 | 177,09 | 3000 | 600 | 40/3 | 56B4 | 9,20 |
| **432 009 15** | 0,09 | 10,3 | 77 | 2,1 | 135,69 | 3000 | 600 | 40/3 | 56B4 | 9,20 |
| **432 009 20** | 0,09 | 14,5 | 55 | 2,9 | 96,85 | 3000 | 600 | 40/3 | 56B4 | 9,20 |
| **432 009 25** | 0,09 | 22,6 | 36 | 1,9 | 61,89 | 1900 | 380 | 20/2 | 56B4 | 6,60 |
| **432 009 30** | 0,09 | 28,1 | 29 | 2,4 | 49,76 | 1900 | 380 | 20/2 | 56B4 | 6,60 |
| **432 009 35** | 0,09 | 37,1 | 22 | 3,2 | 37,69 | 1900 | 380 | 20/2 | 56B4 | 6,60 |
| **432 009 40** | 0,09 | 53 | 16 | 3,9 | 26,31 | 1900 | 380 | 20/2 | 56B4 | 6,60 |
| **432 009 45** | 0,09 | 66 | 12 | 4,8 | 21,15 | 1900 | 380 | 20/2 | 56B4 | 6,60 |
| **432 009 50** | 0,09 | 75 | 11 | 5,4 | 18,78 | 1700 | 340 | 20/2 | 56B4 | 6,60 |
| **432 009 55** | 0,09 | 93 | 9 | 6,7 | 15,10 | 1500 | 340 | 20/2 | 56B4 | 6,60 |
| **432 009 60** | 0,09 | 107 | 8 | 7,8 | 13,03 | 1500 | 340 | 20/2 | 56B4 | 6,60 |
| **432 009 65** | 0,09 | 123 | 7 | 8,9 | 11,42 | 1500 | 340 | 20/2 | 56B4 | 6,60 |
| **432 012 05** | 0,12 | 7,9 | 146 | 1,1 | 177,09 | 3000 | 600 | 40/3 | 63A4 | 10,10 |
| **432 012 10** | 0,12 | 10,3 | 112 | 1,4 | 135,69 | 3000 | 600 | 40/3 | 63A4 | 10,10 |
| **432 012 15** | 0,12 | 13,6 | 85 | 2,1 | 102,89 | 3000 | 600 | 40/3 | 63A4 | 10,10 |
| **432 012 20** | 0,12 | 16,2 | 72 | 1,9 | 86,66 | 3000 | 600 | 40/3 | 63A4 | 10,10 |
| **432 012 25** | 0,12 | 19,1 | 61 | 2,9 | 73,43 | 3000 | 600 | 40/3 | 63A4 | 10,10 |
| **432 012 30** | 0,12 | 22,6 | 53 | 1,3 | 61,89 | 1900 | 3800 | 20/2 | 63A4 | 7,50 |
| **432 012 35** | 0,12 | 28,1 | 42 | 1,7 | 49,76 | 1900 | 3800 | 20/2 | 63A4 | 7,50 |
| **432 012 40** | 0,12 | 37,1 | 32 | 2,2 | 37,69 | 1900 | 3800 | 20/2 | 63A4 | 7,50 |
| **432 012 45** | 0,12 | 48,5 | 25 | 2,8 | 28,88 | 1900 | 3800 | 20/2 | 63A4 | 7,50 |
| **432 012 50** | 0,12 | 53 | 22 | 2,7 | 26,31 | 1900 | 3800 | 20/2 | 63A4 | 7,50 |

1) Radial load $F_R$ max. (on middle of the Output Shaft) for $F_A = 0$.
2) Axial load $F_A$ max. for $F_R = 0$.

Dimensions table page 718.

## Helical Geared Motors HR/I

| Product No. Model B3 | P kW | $n_2$ $min^{-1}$ | $M_a$ Nm | $f_B$ | $i_{ges.}$ | $F_R$ [1] N | $F_A$ [2] N | Gearbox Size | Motor Size | Weight kg |
|---|---|---|---|---|---|---|---|---|---|---|
| **432 018 05** | 0,18 | 10,3 | 155 | 1,0 | 135,69 | 3000 | 600 | 40/3 | 63B4 | 10,50 |
| **432 018 10** | 0,18 | 13,6 | 117 | 1,5 | 102,89 | 3000 | 600 | 40/3 | 63B4 | 10,50 |
| **432 018 15** | 0,18 | 16,2 | 99 | 1,4 | 86,88 | 3000 | 600 | 40/3 | 63B4 | 10,50 |
| **432 018 20** | 0,18 | 19,7 | 81 | 2,0 | 70,95 | 3000 | 600 | 40/3 | 63B4 | 10,50 |
| **432 018 25** | 0,18 | 22,9 | 70 | 2,3 | 61,22 | 3000 | 600 | 40/3 | 63B4 | 10,50 |
| **432 018 30** | 0,18 | 27,6 | 58 | 2,8 | 50,64 | 3000 | 600 | 40/3 | 63B4 | 10,50 |
| **432 018 35** | 0,18 | 32 | 50 | 3,0 | 43,69 | 3000 | 600 | 40/3 | 63B4 | 10,50 |
| **432 018 40** | 0,18 | 39 | 42 | 1,7 | 35,91 | 1900 | 380 | 20/2 | 63B4 | 7,90 |
| **432 018 45** | 0,18 | 48,5 | 34 | 2,1 | 28,88 | 1900 | 380 | 20/2 | 63B4 | 7,90 |
| **432 018 50** | 0,18 | 64 | 26 | 2,3 | 21,84 | 1900 | 380 | 20/2 | 63B4 | 7,90 |
| **432 018 55** | 0,18 | 75 | 22 | 2,7 | 18,78 | 1700 | 340 | 20/2 | 63B4 | 7,90 |
| **432 018 60** | 0,18 | 86 | 19 | 3,1 | 16,2 | 1500 | 300 | 20/2 | 63B4 | 7,90 |
| **432 018 65** | 0,18 | 93 | 18 | 3,4 | 15,1 | 1500 | 270 | 20/2 | 63B4 | 7,90 |
| **432 018 70** | 0,18 | 123 | 13 | 4,5 | 11,42 | 1350 | 246 | 20/2 | 63B4 | 7,90 |
| **432 025 05** | 0,25 | 5,8 | 384 | 0,9 | 241,82 | 5000 | 1000 | 50/3 | 71A4 | 18,00 |
| **432 025 10** | 0,25 | 7,8 | 286 | 1,2 | 180,4 | 5000 | 1000 | 50/3 | 71A4 | 18,00 |
| **432 025 15** | 0,25 | 10,2 | 217 | 1,6 | 136,62 | 5000 | 1000 | 50/3 | 71A4 | 18,00 |
| **432 025 20** | 0,25 | 15,1 | 147 | 2,2 | 92,78 | 5000 | 1000 | 50/3 | 71A4 | 18,00 |
| **432 025 25** | 0,25 | 19,7 | 113 | 1,4 | 70,95 | 3000 | 600 | 40/3 | 71A4 | 12,20 |
| **432 025 30** | 0,25 | 22,9 | 97 | 1,6 | 61,22 | 3000 | 600 | 40/3 | 71A4 | 12,20 |
| **432 025 35** | 0,25 | 27,6 | 80 | 2,0 | 50,64 | 3000 | 600 | 40/3 | 71A4 | 12,20 |
| **432 025 40** | 0,25 | 32 | 69 | 2,2 | 43,69 | 3000 | 600 | 40/3 | 71A4 | 12,20 |
| **432 025 45** | 0,25 | 37,1 | 62 | 1,1 | 37,69 | 1900 | 380 | 20/2 | 71A4 | 9,60 |
| **432 025 50** | 0,25 | 48,5 | 47 | 1,5 | 28,88 | 1900 | 380 | 20/2 | 71A4 | 9,60 |
| **432 025 55** | 0,25 | 64 | 36 | 1,7 | 21,84 | 1900 | 380 | 20/2 | 71A4 | 9,60 |
| **432 025 60** | 0,25 | 75 | 31 | 2,0 | 18,78 | 1700 | 340 | 20/2 | 71A4 | 9,60 |
| **432 025 65** | 0,25 | 107 | 21 | 2,8 | 13,03 | 1500 | 300 | 20/2 | 71A4 | 9,60 |
| **432 025 70** | 0,25 | 123 | 19 | 3,2 | 11,42 | 1350 | 270 | 20/2 | 71A4 | 9,60 |
| **432 025 75** | 0,25 | 142 | 16 | 3,7 | 9,85 | 1320 | 246 | 20/2 | 71A4 | 9,60 |
| **432 025 80** | 0,25 | 194 | 12 | 4,2 | 7,2 | 1320 | 185 | 20/2 | 71A4 | 9,60 |
| **432 025 85** | 0,25 | 257 | 9 | 5,6 | 5,45 | 756 | 151 | 20/2 | 71A4 | 9,60 |
| **432 037 05** | 0,37 | 7,8 | 423 | 0,8 | 180,4 | 5000 | 1000 | 50/3 | 71B4 | 18,60 |
| **432 037 10** | 0,37 | 15,1 | 218 | 1,5 | 92,78 | 5000 | 1000 | 50/3 | 71B4 | 18,60 |
| **432 037 15** | 0,37 | 18,3 | 180 | 2,0 | 76,69 | 5000 | 1000 | 50/3 | 71B4 | 18,60 |
| **432 037 20** | 0,37 | 21,1 | 155 | 2,1 | 66,22 | 5000 | 1000 | 50/3 | 71B4 | 18,60 |
| **432 037 25** | 0,37 | 25,6 | 128 | 2,8 | 54,73 | 5000 | 1000 | 50/3 | 71B4 | 18,60 |
| **432 037 30** | 0,37 | 29,9 | 114 | 1,2 | 46,86 | 3000 | 600 | 40/2 | 71B4 | 12,40 |
| **432 037 35** | 0,37 | 36,5 | 90 | 1,9 | 38,4 | 3000 | 600 | 40/3 | 71B4 | 12,80 |
| **432 037 40** | 0,37 | 39 | 87 | 1,2 | 35,91 | 1900 | 380 | 30/2 | 71B4 | 10,50 |
| **432 037 45** | 0,37 | 48,5 | 70 | 1,0 | 28,88 | 1900 | 380 | 20/2 | 71B4 | 10,20 |
| **432 037 50** | 0,37 | 64 | 53 | 1,1 | 21,84 | 1900 | 380 | 20/2 | 71B4 | 10,20 |
| **432 037 55** | 0,37 | 75 | 46 | 1,3 | 18,78 | 1700 | 340 | 20/2 | 71B4 | 10,20 |
| **432 037 60** | 0,37 | 86 | 39 | 1,5 | 16,2 | 1500 | 300 | 20/2 | 71B4 | 10,20 |
| **432 037 65** | 0,37 | 107 | 32 | 1,9 | 13,03 | 1500 | 300 | 20/2 | 71B4 | 10,20 |
| **432 037 70** | 0,37 | 123 | 28 | 2,2 | 11, 42 | 1350 | 270 | 20/2 | 71B4 | 10,20 |
| **432 037 75** | 0,37 | 142 | 24 | 2,5 | 9,85 | 1320 | 246 | 20/2 | 71B4 | 10,20 |
| **432 037 80** | 0,37 | 181 | 19 | 2,7 | 7,74 | 1320 | 246 | 20/2 | 71B4 | 10,20 |
| **432 055 05** | 0,55 | 8,5 | 577 | 0,9 | 165,29 | 6500 | 1300 | 60/3 | 80A4 | 23,20 |
| **432 055 10** | 0,55 | 11,1 | 442 | 1,1 | 126,65 | 6500 | 1300 | 60/3 | 80A4 | 23,20 |
| **432 055 15** | 0,55 | 13,4 | 365 | 1,4 | 104,68 | 6500 | 1300 | 60/3 | 80A4 | 23,20 |
| **432 055 20** | 0,55 | 15,1 | 324 | 1,0 | 92,78 | 5000 | 1000 | 50/3 | 80A4 | 20,60 |
| **432 055 25** | 0,55 | 18,3 | 268 | 1,3 | 76,69 | 5000 | 1000 | 50/3 | 80A4 | 20,60 |
| **432 055 30** | 0,55 | 21,1 | 231 | 1,4 | 66,22 | 5000 | 1000 | 50/3 | 80A4 | 20,60 |
| **432 055 35** | 0,55 | 25,6 | 191 | 1,9 | 54,73 | 5000 | 1000 | 50/3 | 80A4 | 20,60 |
| **432 055 40** | 0,55 | 29,6 | 165 | 2,1 | 47,22 | 5000 | 1000 | 50/3 | 80A4 | 20,60 |
| **432 055 45** | 0,55 | 34,6 | 146 | 2,0 | 40,5 | 5000 | 1000 | 50/2 | 80A4 | 20,40 |
| **432 055 50** | 0,55 | 39 | 129 | 1,1 | 35,91 | 3000 | 600 | 40/2 | 80A4 | 14,40 |
| **432 055 55** | 0,55 | 47,6 | 106 | 1,5 | 29,4 | 3000 | 600 | 40/2 | 80A4 | 14,40 |
| **432 055 60** | 0,55 | 63 | 80 | 2,1 | 22,29 | 3000 | 600 | 40/2 | 80A4 | 14,40 |
| **432 055 65** | 0,55 | 74 | 68 | 2,0 | 18,8 | 2700 | 540 | 40/2 | 80A4 | 14,40 |
| **432 055 70** | 0,55 | 86 | 58 | 2,4 | 16,2 | 2400 | 480 | 40/2 | 80A4 | 14,40 |
| **432 055 75** | 0,55 | 91 | 55 | 2,9 | 15,37 | 2400 | 480 | 40/2 | 80A4 | 14,40 |
| **432 055 80** | 0,55 | 107 | 47 | 2,4 | 13,03 | 1500 | 300 | 30/2 | 80A4 | 12,50 |
| **432 055 85** | 0,55 | 123 | 41 | 2,8 | 11,42 | 1350 | 270 | 30/2 | 80A4 | 12,50 |
| **432 055 90** | 0,55 | 142 | 35 | 2,7 | 9,85 | 1320 | 246 | 30/2 | 80A4 | 12,50 |
| **432 055 95** | 0,55 | 181 | 28 | 2,9 | 7,74 | 1320 | 246 | 30/2 | 80A4 | 12,50 |
| **432 055 96** | 0,55 | 257 | 20 | 2,5 | 5,45 | 756 | 151 | 30/2 | 80A4 | 12,50 |

[1] Radial load $F_R$ max at $F_A = 0$.
[2] Axial load $F_A$ max at $F_R = 0$.
Dimensions table page 718.

## Helical Geared Motors HR/I

| Product No. Model B3 | P kW | $n_2$ $min^{-1}$ | $M_a$ Nm | $f_B$ | $i_{ges.}$ | $F_R$ [1] N | $F_A$ [2] N | Gearbox Size | Motor Size | Weight kg |
|---|---|---|---|---|---|---|---|---|---|---|
| **432 075 05** | 0,75 | 11,1 | 603 | 0,8 | 126,65 | 6500 | 1300 | 60/3 | 80B4 | 24,70 |
| **432 075 10** | 0,75 | 13,4 | 498 | 1,0 | 104,68 | 6500 | 1300 | 60/3 | 80B4 | 24,70 |
| **432 075 15** | 0,75 | 16,7 | 398 | 1,1 | 83,59 | 6500 | 1300 | 60/3 | 80B4 | 24,70 |
| **432 075 20** | 0,75 | 21,1 | 315 | 1,0 | 66,22 | 5000 | 1000 | 50/3 | 80B4 | 22,10 |
| **432 075 25** | 0,75 | 25,6 | 260 | 1,4 | 54,73 | 5000 | 1000 | 50/3 | 80B4 | 22,10 |
| **432 075 30** | 0,75 | 29,6 | 225 | 1,6 | 47,22 | 5000 | 1000 | 50/3 | 80B4 | 22,10 |
| **432 075 32** | 0,75 | 34,6 | 199 | 1,5 | 40,5 | 5000 | 1000 | 50/2 | 80B4 | 21,90 |
| **432 075 35** | 0,75 | 39,3 | 175 | 1,9 | 35,58 | 5000 | 1000 | 50/2 | 80B4 | 21,90 |
| **432 075 37** | 0,75 | 47,6 | 144 | 2,5 | 29,41 | 4500 | 900 | 50/2 | 80B4 | 21,90 |
| **432 075 40** | 0,75 | 56 | 123 | 2,0 | 24,98 | 4500 | 900 | 50/2 | 80B4 | 21,90 |
| **432 075 42** | 0,75 | 63 | 109 | 1,5 | 22,29 | 3000 | 600 | 40/2 | 80B4 | 15,90 |
| **432 075 45** | 0,75 | 74 | 92 | 1,5 | 18,8 | 2700 | 540 | 40/2 | 80B4 | 15,90 |
| **432 075 47** | 0,75 | 86 | 80 | 1,7 | 16,2 | 2400 | 480 | 40/2 | 80B4 | 15,90 |
| **432 075 50** | 0,75 | 106 | 65 | 2,5 | 13,26 | 2400 | 480 | 40/2 | 80B4 | 15,90 |
| **432 075 52** | 0,75 | 120 | 57 | 3,0 | 11,66 | 2240 | 448 | 40/2 | 80B4 | 15,90 |
| **432 075 55** | 0,75 | 139 | 49 | 3,0 | 10,06 | 2240 | 448 | 40/2 | 80B4 | 15,90 |
| **432 075 57** | 0,75 | 165 | 42 | 1,2 | 5,45 | 1320 | 246 | 30/2 | 90S6 | 16,50 |
| **432 075 60** | 0,75 | 194 | 35 | 2,0 | 7,2 | 1320 | 246 | 30/2 | 80B4 | 14,00 |
| **432 075 65** | 0,75 | 225 | 31 | 2,3 | 6,23 | 924 | 185 | 30/2 | 80B4 | 14,00 |
| **432 075 70** | 0,75 | 257 | 27 | 1,9 | 5,45 | 776 | 151 | 30/2 | 80B4 | 14,00 |
| **432 075 75** | 0,75 | 327 | 21 | 2,4 | 4,28 | 700 | 140 | 30/2 | 80B4 | 14,00 |
| **432 075 80** | 0,75 | 407 | 17 | 3,0 | 3,44 | 700 | 140 | 30/2 | 80B4 | 14,00 |
| **432 110 05** | 1,1 | 18,3 | 535 | 0,9 | 76,69 | 6500 | 1300 | 60/3 | 90S4 | 27,20 |
| **432 110 10** | 1,1 | 21,1 | 462 | 1,1 | 66,22 | 6500 | 1300 | 60/3 | 90S4 | 27,20 |
| **432 110 15** | 1,1 | 25,6 | 382 | 1,3 | 54,73 | 6500 | 1300 | 60/3 | 90S4 | 27,20 |
| **432 110 20** | 1,1 | 29,6 | 330 | 1,5 | 47,22 | 6500 | 1300 | 60/3 | 90S4 | 27,20 |
| **432 110 25** | 1,1 | 35,2 | 278 | 1,6 | 39,79 | 6500 | 1300 | 60/3 | 90S4 | 27,20 |
| **432 110 30** | 1,1 | 39,3 | 256 | 1,3 | 35,58 | 5000 | 1000 | 50/2 | 90S4 | 24,40 |
| **432 110 35** | 1,1 | 47,6 | 212 | 1,7 | 29,41 | 4500 | 900 | 50/2 | 90S4 | 24,40 |
| **432 110 40** | 1,1 | 56 | 180 | 1,4 | 24,98 | 4500 | 900 | 50/2 | 90S4 | 24,40 |
| **432 110 45** | 1,1 | 65 | 155 | 1,0 | 21,54 | 3000 | 600 | 40/2 | 90S4 | 18,40 |
| **432 110 50** | 1,1 | 78 | 130 | 1,2 | 18,04 | 2700 | 540 | 40/2 | 90S4 | 18,40 |
| **432 110 55** | 1,1 | 91 | 111 | 1,4 | 15,37 | 2400 | 480 | 40/2 | 90S4 | 18,40 |
| **432 110 57** | 1,1 | 106 | 96 | 1,7 | 13,26 | 2400 | 480 | 40/2 | 90S4 | 18,40 |
| **432 110 60** | 1,1 | 120 | 84 | 2,1 | 11,66 | 2240 | 448 | 40/2 | 90S4 | 18,40 |
| **432 110 62** | 1,1 | 139 | 72 | 2,1 | 10,06 | 2240 | 448 | 40/2 | 90S4 | 18,40 |
| **432 110 65** | 1,1 | 181 | 56 | 1,4 | 7,74 | 1320 | 246 | 30/2 | 90S4 | 16,50 |
| **432 110 67** | 1,1 | 194 | 52 | 1,3 | 7,2 | 1320 | 246 | 30/2 | 90S4 | 16,50 |
| **432 110 70** | 1,1 | 225 | 45 | 1,6 | 6,23 | 924 | 185 | 30/2 | 90S4 | 16,50 |
| **432 110 75** | 1,1 | 257 | 39 | 1,3 | 5,45 | 756 | 151 | 30/2 | 90S4 | 16,50 |
| **432 110 80** | 1,1 | 327 | 31 | 1,6 | 4,28 | 700 | 140 | 30/2 | 90S4 | 16,50 |
| **432 110 85** | 1,1 | 407 | 25 | 2,0 | 3,44 | 700 | 140 | 30/2 | 90S4 | 16,50 |
| **432 150 05** | 1,5 | 25,6 | 521 | 1,0 | 54,73 | 6500 | 1300 | 60/3 | 90LA4 | 29,70 |
| **432 150 10** | 1,5 | 29,6 | 449 | 1,1 | 47,22 | 6500 | 1300 | 60/3 | 90LA4 | 29,70 |
| **432 150 15** | 1,5 | 35,2 | 379 | 1,1 | 39,79 | 6500 | 1300 | 60/3 | 90LA4 | 29,70 |
| **432 150 20** | 1,5 | 39,3 | 349 | 0,9 | 35,58 | 5000 | 1000 | 50/2 | 90LA4 | 26,90 |
| **432 150 25** | 1,5 | 47,6 | 289 | 1,2 | 29,41 | 4500 | 900 | 50/2 | 90LA4 | 26,90 |
| **432 150 30** | 1,5 | 56 | 245 | 1,0 | 24,98 | 4500 | 900 | 50/2 | 90LA4 | 26,90 |
| **432 150 35** | 1,5 | 70 | 197 | 1,7 | 20,1 | 3900 | 780 | 50/2 | 90LA4 | 26,90 |
| **432 150 40** | 1,5 | 84 | 163 | 2,2 | 16,62 | 3900 | 780 | 50/2 | 90LA4 | 26,90 |
| **432 150 45** | 1,5 | 99 | 140 | 1,8 | 14,21 | 3500 | 700 | 50/2 | 90LA4 | 26,90 |
| **432 150 50** | 1,5 | 120 | 114 | 1,5 | 11,66 | 2240 | 448 | 40/2 | 90LA4 | 20,90 |
| **432 150 55** | 1,5 | 139 | 99 | 1,5 | 10,06 | 2240 | 448 | 40/2 | 90LA4 | 20,90 |
| **432 150 60** | 1,5 | 177 | 78 | 1,5 | 7,89 | 2030 | 406 | 40/2 | 90LA4 | 20,90 |
| **432 150 65** | 1,5 | 191 | 72 | 1,7 | 7,33 | 2030 | 406 | 40/2 | 90LA4 | 20,90 |
| **432 150 70** | 1,5 | 220 | 62 | 1,5 | 6,36 | 1800 | 360 | 40/2 | 90LA4 | 20,90 |
| **432 150 75** | 1,5 | 257 | 54 | 0,9 | 5,45 | 756 | 151 | 30/2 | 90LA4 | 19,00 |
| **432 150 80** | 1,5 | 327 | 42 | 1,2 | 4,28 | 700 | 140 | 30/2 | 90LA4 | 19,00 |
| **432 150 85** | 1,5 | 407 | 34 | 1,5 | 3,44 | 700 | 140 | 30/2 | 90LA4 | 19,00 |

[1] Radial load $F_R$ max at $F_A = 0$.
[2] Axial load $F_A$ max at $F_R = 0$.
Dimensions table page 718.

### Note for Dimensioning

Three-phase motors have a very high starting torque. The max. permissible, stability related torque of the gearbox is the product of output torque and operating factor: $M_{max.} = M_a \times f_B$

This torque must never be exceeded.

Furthermore, depending on kind of operation, factors for shock load and acceleration must be considered.

***Optionally also available with additional manual adjustment mechanism (on request).***

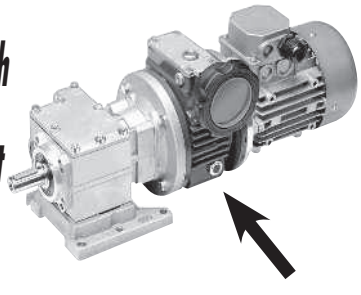

## Output Flanges for Helical Geared Motors HR/I

**Material:** Aluminium.

Output-side flange for helical geared motor HR/I to be mounted by the customer, for modification from foot mounting B3 to flange mounting B5.

For every gearbox size there are flanges in several, common diameters available.

The flange is supplied with the required mounting screws and can be easily screwed on. The screwed on foot mounting can be taken off the gearbox, if required.

**Ordering details: e.g.: Prod. No. 432 020 12, Output Flange for Gearbox Size 20/2 and 30/2**

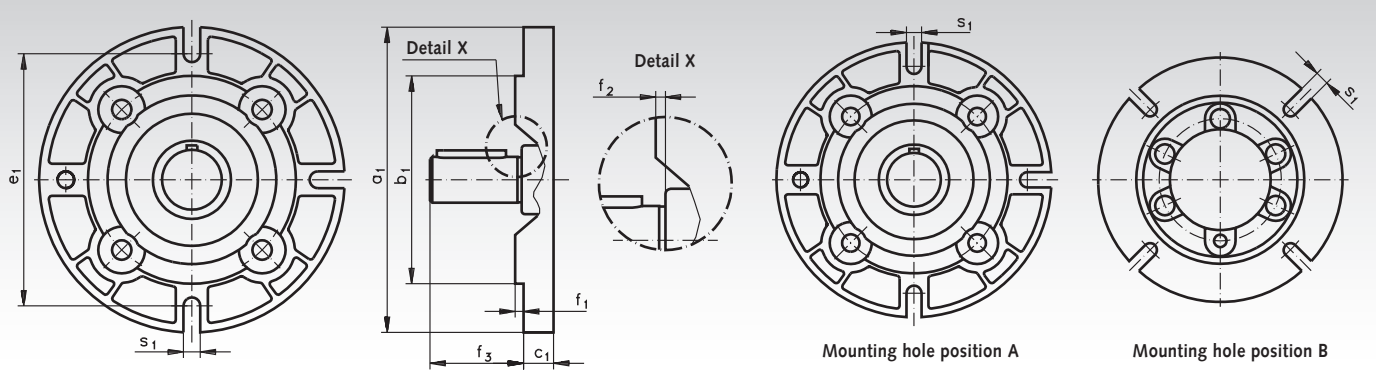


### Output Flange Gearbox Size 20/2 and 30/2

| Product No. | $a_1$ mm | $b_1$ mm | $c_1$ mm | $e_1$ mm | $f_1$ mm | $f_2$ mm | $f_3$ mm | $s_1$ mm | Mount. Hole Position | Weight kg |
|---|---|---|---|---|---|---|---|---|---|---|
| **432 020 12** | 120 | 80 | 11,5 | 100 | 3,0 | 6,5 | 36,5 | 9 | A | 0,23 |
| **432 020 14** | 140 | 95 | 11,5 | 115 | 3,0 | 6,5 | 36,5 | 9 | B | 0,32 |
| **432 020 16** | 160 | 110 | 11,5 | 130 | 3,5 | 7,0 | 36,5 | 9 | B | 0,41 |
| **432 020 20** | 200 | 130 | 11,5 | 165 | 3,5 | 7,0 | 36,5 | 11 | B | 0,61 |

### Output Flange Gearbox Size 40/2 and 40/3

| Product No. | $a_1$ mm | $b_1$ mm | $c_1$ mm | $e_1$ mm | $f_1$ mm | $f_2$ mm | $f_3$ mm | $s_1$ mm | Mount. Hole Position | Weight kg |
|---|---|---|---|---|---|---|---|---|---|---|
| **432 040 12** | 120 | 80 | 10 | 100 | 3,0 | 6,0 | 47 | 9 | B | 0,24 |
| **432 040 14** | 140 | 95 | 10 | 115 | 3,0 | 6,0 | 47 | 9 | B | 0,32 |
| **432 040 16** | 160 | 110 | 10 | 130 | 3,0 | 6,0 | 47 | 9 | B | 0,42 |
| **432 040 20** | 200 | 130 | 11 | 165 | 3,5 | 6,5 | 47 | 11 | B | 0,67 |

### Output Flange Gearbox Size 50/2, 50/3 und 60/3

| Product No. | $a_1$ mm | $b_1$ mm | $c_1$ mm | $e_1$ mm | $f_1$ mm | $f_2$ mm | $f_3$ Size 50 mm | $f_3$ Size 60 mm | $s_1$ mm | Mount. Hole Position | Weight kg |
|---|---|---|---|---|---|---|---|---|---|---|---|
| **432 050 16** | 160 | 110 | 14,0 | 130 | 3,5 | 6,0 | 57,5 | 67,5 | 9 | B | 0,52 |
| **432 050 20** | 200 | 130 | 13,0 | 165 | 3,5 | 6,0 | 57,5 | 67,5 | 11 | B | 0,71 |
| **432 050 25** | 250 | 180 | 15,5 | 215 | 4,0 | 6,5 | 57,5 | 67,5 | 14 | B | 1,24 |

### Lubricant Volume in Litre ($dm^3$)

The gearbox is lubricated for life, using synthetic oil. At normal operating conditions, no change is required. The lubricant volume is the same for all mounting positions.

| Size | 20/2 | 30/2 | 40/2 | 40/3 | 50/2 | 50/3 | 60/3 |
|---|---|---|---|---|---|---|---|
| Oil volume | 0.15 | 0.15 | 0.40 | 0.45 | 1.10 | 1.15 | 1.25 |

## Dimensions Table Helical Geared Motors HR/I

Gearbox Size
20/2
30/2

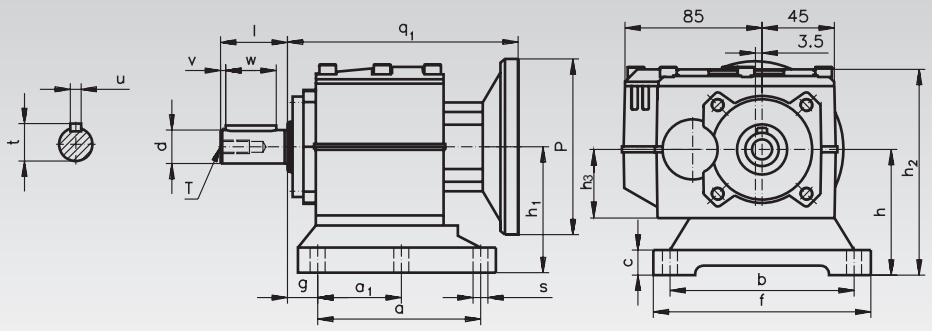


Gearbox Size
40/2
40/3
50/2
50/3
60/3

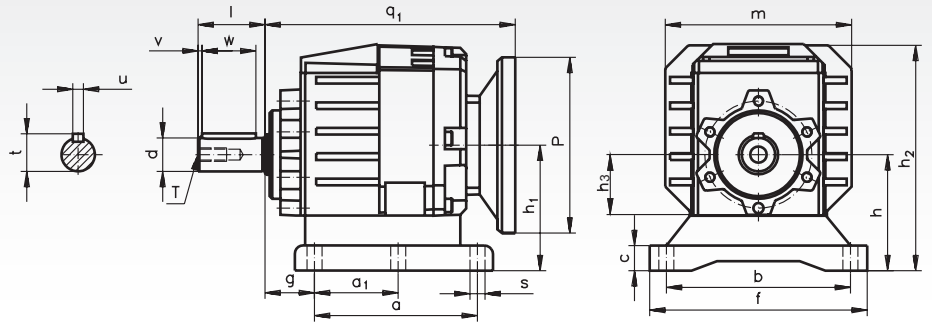


| Gear Size | Motor Size | Output Shaft d mm | l mm | t mm | T mm | u mm | v mm | w mm | Gearbox Housing and Foot a mm | $a_1$ mm | b mm | c mm | f mm | g mm | h mm | $h_1$ mm | $h_2$ mm | $h_3$ mm | m mm | P m | $q_1$ mm | s mm |
|---|---|---|---|---|---|---|---|---|---|---|---|---|---|---|---|---|---|---|---|---|---|---|
| **20/2** | **56** | 16 | 40 | 18,0 | M6 | 5 | 3 | 30 | 110 | 50 | 110 | 15 | 130 | 18 | 75 | 75,0 | 115,5 | 41 | - | 78 | 137,5 | 9,0 |
| **20/2** | **63** | 16 | 40 | 18,0 | M6 | 5 | 3 | 30 | 110 | 50 | 110 | 15 | 130 | 18 | 75 | 75,0 | 115,5 | 41 | - | 90 | 133,5 | 9,0 |
| **20/2** | **71** | 16 | 40 | 18,0 | M6 | 5 | 3 | 30 | 110 | 50 | 110 | 15 | 130 | 18 | 75 | 75,0 | 115,5 | 41 | - | 105 | 133,0 | 9,0 |
| **30/2** | **71** | 20 | 40 | 22,5 | M8 | 6 | 3 | 30 | 110 | 50 | 110 | 15 | 130 | 18 | 75 | 75,0 | 115,5 | 41 | - | 105 | 149,5 | 9,0 |
| **30/2** | **80** | 20 | 40 | 22,5 | M8 | 6 | 3 | 30 | 110 | 50 | 110 | 15 | 130 | 18 | 75 | 75,0 | 115,5 | 41 | - | 120 | 150,5 | 9,0 |
| **30/2** | **90** | 20 | 40 | 22,5 | M8 | 6 | 3 | 30 | 110 | 50 | 110 | 15 | 130 | 18 | 75 | 75,0 | 115,5 | 41 | - | 140 | 151,5 | 9,0 |
| **40/2** | **71** | 25 | 50 | 28,0 | M8 | 8 | 3 | 40 | 90 | 50 | 110 | 15 | 145 | 18 | 75 | 82,0 | 155,0 | 45,5 | 139 | 105 | 178,5 | 9,0 |
| **40/2** | **80** | 25 | 50 | 28,0 | M8 | 8 | 3 | 40 | 90 | 50 | 110 | 15 | 145 | 18 | 75 | 82,0 | 155,0 | 45,5 | 139 | 120 | 179,5 | 9,0 |
| **40/2** | **90** | 25 | 50 | 28,0 | M8 | 8 | 3 | 40 | 90 | 50 | 110 | 15 | 145 | 18 | 75 | 82,0 | 155,0 | 45,5 | 139 | 140 | 180,5 | 9,0 |
| **40/3** | **56** | 25 | 50 | 28,0 | M8 | 8 | 3 | 40 | 90 | 50 | 110 | 15 | 145 | 18 | 75 | 78,2 | 155,0 | 45,5 | 139 | 78 | 186,5 | 9,0 |
| **40/3** | **63** | 25 | 50 | 28,0 | M8 | 8 | 3 | 40 | 90 | 50 | 110 | 15 | 145 | 18 | 75 | 78,2 | 155,0 | 45,5 | 139 | 90 | 181,5 | 9,0 |
| **40/3** | **71** | 25 | 50 | 28,0 | M8 | 8 | 3 | 40 | 90 | 50 | 110 | 15 | 145 | 18 | 75 | 78,2 | 155,0 | 45,5 | 139 | 105 | 182,0 | 9,0 |
| **50/2** | **80** | 30 | 60 | 33,0 | M10 | 8 | 5 | 50 | 165 | - | 135 | 24 | 170 | 30 | 115 | 120,3 | 216,5 | 69,5 | 178 | 120 | 226,0 | 13,5 |
| **50/2** | **90** | 30 | 60 | 33,0 | M10 | 8 | 5 | 50 | 165 | - | 135 | 24 | 170 | 30 | 115 | 120,3 | 216,5 | 69,5 | 178 | 140 | 226,0 | 13,5 |
| **50/3** | **71** | 30 | 60 | 33,0 | M10 | 8 | 5 | 50 | 165 | - | 135 | 24 | 170 | 30 | 115 | 130,0 | 216,5 | 69,5 | 178 | 105 | 234,5 | 13,5 |
| **50/3** | **80** | 30 | 60 | 33,0 | M10 | 8 | 5 | 50 | 165 | - | 135 | 24 | 170 | 30 | 115 | 130,0 | 216,5 | 69,5 | 178 | 120 | 235,5 | 13,5 |
| **60/3** | **80** | 35 | 70 | 38,0 | M10 | 10 | 5 | 60 | 165 | - | 135 | 24 | 170 | 30 | 115 | 130,5 | 218,0 | 69,5 | 202 | 120 | 254,0 | 13,5 |
| **60/3** | **90** | 35 | 70 | 38,0 | M10 | 10 | 5 | 60 | 165 | - | 135 | 24 | 170 | 30 | 115 | 130,5 | 218,0 | 69,5 | 202 | 140 | 255,0 | 13,5 |

Motor
(Model B14)

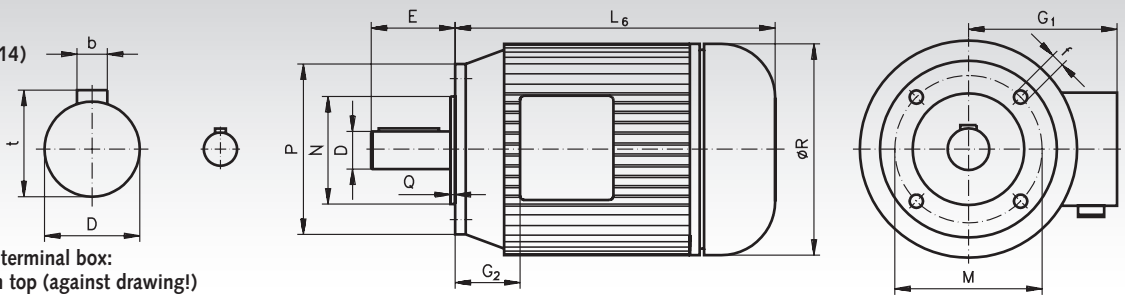


Position of terminal box:
standard on top (against drawing!)

| Motor Size | D mm | b mm | t mm | E mm | f mm | $G_1$ mm | $G_2$ mm | $L_6$ mm | M mm | N mm | P mm | Q mm | R mm | Weight kg |
|---|---|---|---|---|---|---|---|---|---|---|---|---|---|---|
| **56B** | 9 | 3 | 10,2 | 20 | M5 | 112 | 13 | 179 | 65 | 50 | 80 | 2,5 | 108 | 2,9 |
| **63A** | 11 | 4 | 12,5 | 23 | M5 | 113 | 19 | 185 | 75 | 60 | 90 | 2,5 | 120 | 3,8 |
| **63B** | 11 | 4 | 12,5 | 23 | M5 | 113 | 19 | 185 | 75 | 60 | 90 | 2,5 | 120 | 4,2 |
| **71A** | 14 | 5 | 16 | 30 | M6 | 125 | 24 | 206 | 85 | 70 | 105 | 2,5 | 130 | 5,9 |
| **71B** | 14 | 5 | 16 | 30 | M6 | 125 | 24 | 225 | 85 | 70 | 105 | 2,5 | 141 | 6,5 |
| **80A** | 19 | 6 | 21,5 | 40 | M6 | 133 | 23 | 256 | 100 | 80 | 120 | 3 | 159 | 8,5 |
| **80B** | 19 | 6 | 21,5 | 40 | M6 | 133 | 23 | 256 | 100 | 80 | 120 | 3 | 159 | 10 |
| **90S** | 24 | 8 | 27 | 50 | M8 | 148 | 28 | 255 | 115 | 95 | 140 | 3 | 170 | 12,5 |
| **90L** | 24 | 8 | 27 | 50 | M8 | 148 | 28 | 280 | 115 | 95 | 140 | 3 | 170 | 15 |

**Housing:** One-part, torsion-resistant block-shaped housing made from grey cast iron type GG20 or GGG40. The high torsional stiffness helps to achieve an optimum production accuracy, leading to low noise and thus a longer service life.

**Gearing:** The helical gearwheels are produced from forged blanks, the gears are case hardened and ground or scraped. The calculations were carried out according to DIN 3990.

**Bearing system:** Generously dimensioned roller bearings.

**Shafts:** Ø according to ISO k6. Feather key groove according to DIN 6885/1. Centering points with threads according to DIN 332/2.

**Lubrication:** The gear boxes are delivered filled with the correct level of oil or grease, which offers sufficient lubrication for about 10.000 operating hours, or for an operation period of 2 years, at a temperature of -5°C to +40°C. When changing the lubricant, always clean the gearbox thoroughly.

**Motor:** 230/400 V, 50 Hz, according to DIN 40050-VDE 0530, IP 55, insulation class „B“ VDE 0530, temperature limit +80°C at max. ambient temperature of 40°C.

**From 0.75 kW in efficiency class IE2.**

Gearbox with higher power, other speeds, fitted brake motors, explosion-proof or dual-speed motors and other models on request.

**Note**

The oil volume and venting position depends on the model and the mounting position. Please read the operating and maintenance instructions carefully.

**Ordering details: e.g.: Type, Motor Power, Output Speed, Model, Product No.**

| Product No. Model B3 | P kW | $n_2$ $min^{-1}$ | $M_a$ Nm | $f_B$ | $i_{tot.}$ | Standard Bearing $F_R$ 1) N | $F_A$ 2) N | Dimen.-Table | Weight kg |
|---|---|---|---|---|---|---|---|---|---|
| **431 002 01** | 0,12 | 3,2 | 209* | 0,8 | 420,83 | 2980 | 4000 | 1 | 19 |
| **431 002 04** | 0,12 | 4,9 | 220* | 0,8 | 275,12 | 2890 | 4000 | 1 | 19 |
| **431 002 06** | 0,12 | 6,8 | 169 | 1,2 | 195,78 | 3240 | 4000 | 1 | 19 |
| **431 002 07** | 0,12 | 8,4 | 136 | 1,2 | 159,36 | 3400 | 4000 | 1 | 19 |
| **431 002 08** | 0,12 | 10 | 115 | 1,3 | 132,45 | 3490 | 4000 | 1 | 19 |
| **431 003 04** | 0,12 | 18 | 64 | 1,4 | 73,06 | 2270 | 3270 | 2 | 12 |
| **431 003 06** | 0,12 | 25 | 46 | 1,9 | 53,68 | 2340 | 3270 | 2 | 12 |
| **431 003 08** | 0,12 | 40 | 29 | 3,4 | 33,42 | 2390 | 3270 | 2 | 12 |
| **431 003 10** | 0,12 | 58 | 20 | 3,9 | 23,13 | 2400 | 3270 | 2 | 12 |
| **431 003 12** | 0,12 | 84 | 14 | 5,3 | 15,95 | 2410 | 3270 | 2 | 12 |
| **431 003 13** | 0,12 | 104 | 11 | 6,4 | 12,82 | 2410 | 3270 | 2 | 12 |
| **431 003 16** | 0,12 | 144 | 8 | 8,2 | 9,28 | 2390 | 3270 | 2 | 12 |
| **431 003 19** | 0,12 | 194 | 6 | 10,3 | 6,89 | 2170 | 3270 | 2 | 12 |
| **431 003 21** | 0,12 | 277 | 4 | 13,8 | 4,82 | 1930 | 3240 | 2 | 12 |
| **431 003 23** | 0,12 | 395 | 3 | 16,5 | 3,38 | 1720 | 2780 | 2 | 12 |
| **431 010 01** | 0,18 | 2,5 | 668 | 1,0 | 524,08 | 5700 | 9000 | 3 | 43 |
| **431 010 02** | 0,18 | 3,1 | 555 | 1,2 | 421,32 | 6110 | 9000 | 3 | 43 |
| **431 010 03** | 0,18 | 3,9 | 441 | 1,5 | 339,15 | 6380 | 9000 | 3 | 43 |
| **431 011 01** | 0,18 | 5,1 | 337 | 1,0 | 262,24 | 4520 | 5600 | 4 | 31 |
| **431 011 02** | 0,18 | 6,2 | 282 | 1,2 | 217,73 | 4820 | 5600 | 4 | 31 |
| **431 011 04** | 0,18 | 8,7 | 198 | 1,5 | 151,44 | 5150 | 5600 | 4 | 31 |
| **431 014 01** | 0,18 | 18 | 96 | 0,9 | 73,06 | 2080 | 3270 | 2 | 12 |
| **431 014 03** | 0,18 | 25 | 69 | 1,3 | 53,68 | 2250 | 3270 | 2 | 12 |
| **431 014 05** | 0,18 | 40 | 43 | 2,2 | 33,42 | 2350 | 3270 | 2 | 12 |
| **431 014 07** | 0,18 | 57 | 30 | 2,6 | 23,13 | 2380 | 3270 | 2 | 12 |
| **431 014 09** | 0,18 | 83 | 21 | 3,5 | 15,95 | 2400 | 3270 | 2 | 12 |
| **431 014 10** | 0,18 | 103 | 17 | 4,2 | 12,82 | 2400 | 3270 | 2 | 12 |
| **431 014 13** | 0,18 | 143 | 12 | 5,4 | 9,28 | 2370 | 3270 | 2 | 12 |
| **431 014 16** | 0,18 | 192 | 9 | 6,8 | 6,89 | 2160 | 3270 | 2 | 12 |
| **431 014 18** | 0,18 | 275 | 6 | 9,1 | 4,82 | 1920 | 3190 | 2 | 12 |
| **431 014 20** | 0,18 | 329 | 4 | 10,9 | 3,38 | 1710 | 2760 | 2 | 12 |
| **431 024 01** | 0,25 | 19 | 126 | 1,1 | 72,63 | 3440 | 4000 | 5 | 15 |
| **431 024 02** | 0,25 | 22 | 109 | 1,4 | 61,35 | 3510 | 4000 | 5 | 15 |
| **431 025 01** | 0,25 | 26 | 92 | 1,0 | 53,68 | 2110 | 3270 | 6 | 13 |
| **431 025 03** | 0,25 | 41 | 58 | 1,6 | 33,42 | 2300 | 3270 | 6 | 13 |
| **431 025 05** | 0,25 | 60 | 40 | 2,0 | 23,13 | 2360 | 3270 | 6 | 13 |
| **431 025 07** | 0,25 | 87 | 27 | 2,6 | 15,95 | 2390 | 3270 | 6 | 13 |
| **431 025 08** | 0,25 | 108 | 22 | 3,2 | 12,82 | 2400 | 3270 | 6 | 13 |
| **431 025 11** | 0,25 | 149 | 16 | 4,1 | 9,28 | 2310 | 3270 | 6 | 13 |
| **431 025 14** | 0,25 | 200 | 12 | 5,1 | 6,89 | 2110 | 3270 | 6 | 13 |
| **431 025 16** | 0,25 | 286 | 8 | 6,8 | 4,82 | 1830 | 3140 | 6 | 13 |
| **431 025 18** | 0,25 | 408 | 6 | 8,2 | 3,38 | 1680 | 2720 | 6 | 13 |

* Max. output torque: at $f_B$ = 0.8. Dimensions table page 721.

## Helical Geared Motors NR/I

| Product No. Model B3 | P kW | $n_2$ $min^{-1}$ | $M_a$ Nm | $f_B$ | i tot. | Standard Mounting $F_R$ [1] N | $F_A$ [2] N | Dimens. Table | Weight kg |
|---|---|---|---|---|---|---|---|---|---|
| **431 034 02** | 0,37 | 11 | 321 | 1,1 | 124,17 | 4610 | 5600 | 7 | 33 |
| **431 036 01** | 0,37 | 16 | 221 | 1,1 | 86,30 | 5070 | 5600 | 8 | 25 |
| **431 036 02** | 0,37 | 19 | 186 | 1,4 | 69,81 | 5190 | 5600 | 8 | 25 |
| **431 036 03** | 0,37 | 25 | 141 | 2,3 | 55,28 | 5300 | 5600 | 8 | 25 |
| **431 038 01** | 0,37 | 33 | 107 | 0,9 | 41,58 | 1990 | 3270 | 6 | 14 |
| **431 038 02** | 0,37 | 41 | 86 | 1,1 | 33,42 | 2150 | 3270 | 6 | 14 |
| **431 038 06** | 0,37 | 59 | 60 | 1,3 | 23,13 | 2290 | 3270 | 6 | 14 |
| **431 038 08** | 0,37 | 85 | 42 | 1,7 | 15,95 | 2350 | 3270 | 6 | 14 |
| **431 038 09** | 0,37 | 106 | 33 | 2,1 | 12,82 | 2380 | 3270 | 6 | 14 |
| **431 038 12** | 0,37 | 147 | 24 | 2,7 | 9,28 | 2270 | 3270 | 6 | 14 |
| **431 038 15** | 0,37 | 197 | 18 | 3,4 | 6,89 | 2080 | 3270 | 6 | 14 |
| **431 038 17** | 0,37 | 282 | 13 | 4,5 | 4,82 | 1850 | 3270 | 6 | 14 |
| **431 044 01** | 0,55 | 14 | 375 | 0,9 | 100,60 | 4270 | 5600 | 9 | 35 |
| **431 044 02** | 0,55 | 16 | 328 | 1,0 | 88,45 | 4570 | 5600 | 9 | 35 |
| **431 046 01** | 0,55 | 20 | 263 | 1,0 | 69,81 | 4910 | 5600 | 10 | 27 |
| **431 046 02** | 0,55 | 25 | 210 | 1,5 | 55,28 | 5110 | 5600 | 10 | 27 |
| **431 047 01** | 0,55 | 29 | 181 | 1,0 | 47,87 | 2480 | 4000 | 11 | 18 |
| **431 047 02** | 0,55 | 36 | 146 | 1,3 | 38,31 | 3030 | 4000 | 11 | 18 |
| **431 047 03** | 0,55 | 44 | 119 | 1,4 | 31,19 | 3370 | 4000 | 11 | 18 |
| **431 047 04** | 0,55 | 53 | 99 | 1,4 | 25,92 | 3210 | 4000 | 11 | 18 |
| **431 048 02** | 0,55 | 57 | 92 | 1,0 | 24,39 | 1910 | 3270 | 12 | 16 |
| **431 048 03** | 0,55 | 67 | 78 | 0,9 | 20,59 | 2200 | 3270 | 12 | 16 |
| **431 048 04** | 0,55 | 86 | 61 | 1,2 | 15,95 | 2290 | 3270 | 12 | 16 |
| **431 048 05** | 0,55 | 107 | 49 | 1,4 | 12,82 | 2330 | 3270 | 12 | 16 |
| **431 048 06** | 0,55 | 122 | 43 | 1,6 | 11,27 | 2310 | 3270 | 12 | 16 |
| **431 048 07** | 0,55 | 138 | 38 | 1,7 | 9,95 | 2240 | 3270 | 12 | 16 |
| **431 048 08** | 0,55 | 148 | 35 | 1,8 | 9,28 | 2190 | 3270 | 12 | 16 |
| **431 048 11** | 0,55 | 200 | 26 | 2,3 | 6,89 | 2010 | 3270 | 12 | 16 |
| **431 058 01** | 0,75 | 36 | 199 | 0,9 | 38,31 | 600 | 4000 | 11 | 19 |
| **431 058 02** | 0,75 | 44 | 163 | 1,0 | 31,19 | 1350 | 4000 | 11 | 19 |
| **431 058 03** | 0,75 | 53 | 135 | 1,0 | 25,92 | 1890 | 4000 | 11 | 19 |
| **431 058 04** | 0,75 | 65 | 110 | 1,5 | 21,28 | 2960 | 4000 | 11 | 19 |
| **431 058 05** | 0,75 | 73 | 98 | 1,6 | 18,79 | 2890 | 4000 | 11 | 19 |
| **431 058 06** | 0,75 | 82 | 87 | 1,8 | 16,73 | 2830 | 4000 | 11 | 19 |
| **431 059 02** | 0,75 | 107 | 67 | 1,0 | 12,82 | 2260 | 3270 | 12 | 17 |
| **431 059 04** | 0,75 | 138 | 52 | 1,2 | 9,95 | 2150 | 3270 | 12 | 17 |
| **431 059 06** | 0,75 | 168 | 43 | 1,5 | 8,19 | 2040 | 3270 | 12 | 17 |
| **431 059 08** | 0,75 | 200 | 36 | 1,7 | 6,89 | 1950 | 3270 | 12 | 17 |
| **431 059 10** | 0,75 | 285 | 25 | 2,3 | 4,82 | 1760 | 3090 | 12 | 17 |
| **431 059 12** | 0,75 | 407 | 18 | 2,7 | 3,38 | 1590 | 2730 | 12 | 17 |
| **431 069 01** | 1,10 | 31 | 339 | 0,9 | 45,90 | 1250 | 5600 | 13 | 31 |
| **431 069 03** | 1,10 | 40 | 263 | 1,3 | 35,55 | 3170 | 5600 | 13 | 31 |
| **431 069 04** | 1,10 | 49 | 214 | 1,4 | 29,31 | 3920 | 5600 | 13 | 31 |
| **431 069 05** | 1,10 | 58 | 181 | 1,4 | 24,73 | 4300 | 5600 | 13 | 31 |
| **431 069 06** | 1,10 | 72 | 146 | 2,0 | 20,03 | 4120 | 5600 | 13 | 31 |
| **431 070 03** | 1,10 | 86 | 122 | 1,3 | 16,73 | 1920 | 4000 | 14 | 22 |
| **431 070 04** | 1,10 | 107 | 98 | 1,5 | 13,39 | 2270 | 4000 | 14 | 22 |
| **431 070 06** | 1,10 | 149 | 71 | 1,9 | 9,65 | 2300 | 4000 | 14 | 22 |
| **431 070 08** | 1,10 | 220 | 48 | 2,6 | 6,53 | 2080 | 3650 | 14 | 22 |
| **431 070 10** | 1,10 | 291 | 36 | 3,2 | 4,93 | 1940 | 3360 | 14 | 22 |
| **431 070 12** | 1,10 | 361 | 29 | 3,5 | 3,98 | 1810 | 3080 | 14 | 22 |
| **431 080 01** | 1,50 | 41 | 349 | 1,0 | 34,69 | 343 | 381 | 13 | 33 |
| **431 080 02** | 1,50 | 49 | 292 | 1,3 | 28,80 | 1000 | 5600 | 13 | 33 |
| **431 080 03** | 1,50 | 60 | 239 | 1,4 | 23,74 | 2000 | 5600 | 13 | 33 |
| **431 080 04** | 1,50 | 71 | 202 | 1,4 | 20,03 | 2600 | 5600 | 13 | 33 |
| **431 081 01** | 1,50 | 85 | 169 | 0,9 | 16,73 | 239 | 272 | 14 | 24 |
| **431 081 02** | 1,50 | 106 | 135 | 1,1 | 13,39 | 600 | 3920 | 14 | 24 |
| **431 081 04** | 1,50 | 147 | 97 | 1,4 | 9,65 | 1650 | 3760 | 14 | 24 |
| **431 081 06** | 1,50 | 217 | 66 | 1,9 | 6,53 | 1980 | 3380 | 14 | 24 |
| **431 081 08** | 1,50 | 287 | 50 | 2,3 | 4,93 | 1870 | 2140 | 14 | 24 |
| **431 081 10** | 1,50 | 356 | 40 | 2,5 | 3,98 | 1750 | 2920 | 14 | 24 |
| **431 081 11** | 1,50 | 417 | 34 | 2,6 | 3,39 | 1690 | 2780 | 14 | 24 |

[1] Radial load $F_R$ max at $F_A = 0$.
[2] Axial load $F_A$ max at $F_R = 0$.
Dimensions table page 721.

### Note for Dimensioning

Three-phase motors have a very high starting torque. The max. permissible, stability related torque of the gearbox is the product of output torque and operating factor: $M_{max.} = M_a \times f_B$

This torque must never be exceeded.

Furthermore, depending on kind of operation, factors for shock load and acceleration must be considered.

## Two-Stage, Dimensions Table 2, 5, 6, 8, 10, 11, 12, 13, 14

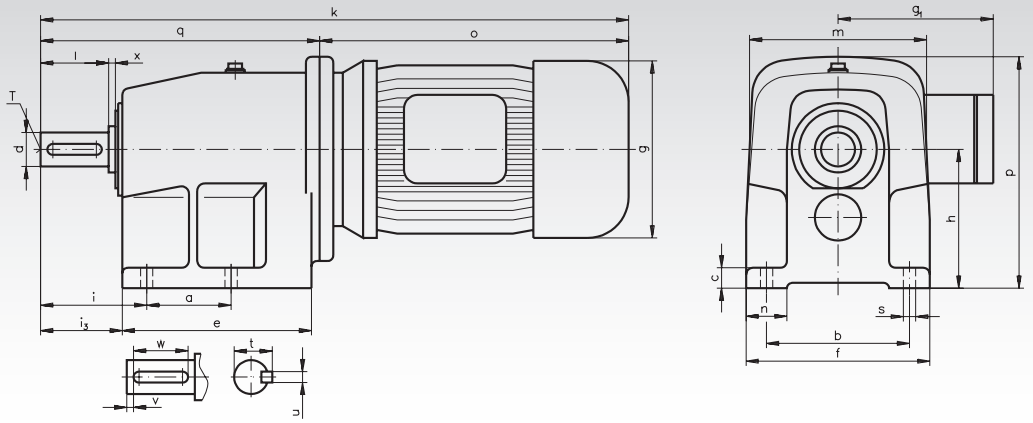


## Three-Stage, Dimensions Table 1, 3, 4, 7, 9

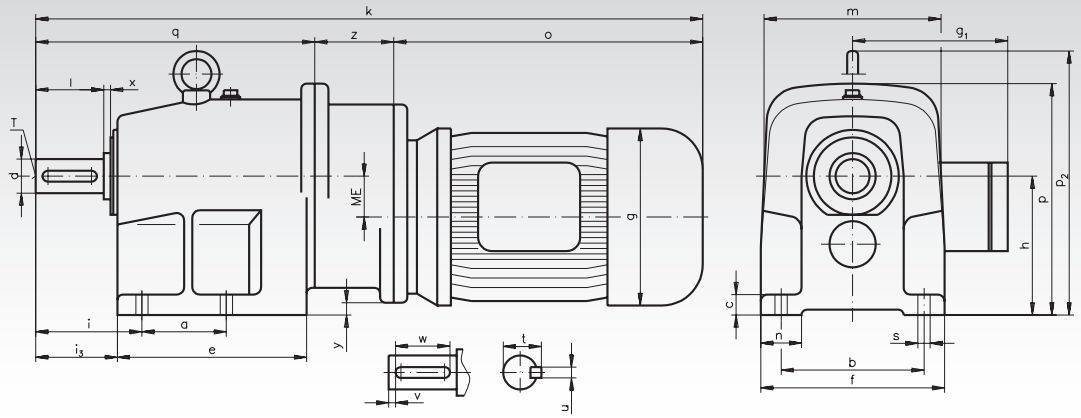


| | Mounting Dimensions (Foot) | | | | | | | Dimensions and Connecting Dimensions | | | | | | | | | | | | | | Shaft Dimensions | | | | | | | |
|---|---|---|---|---|---|---|---|---|---|---|---|---|---|---|---|---|---|---|---|---|---|---|---|---|---|---|---|---|---|
| **Dim.** | a | b | c | e | f | n | s | g | $g_1$ | h | i | $i_3$ | k | m | o | p | $p_2$ | q | y | z | ME | d | l | t | u | v | w | x | T |
| **Table** | mm | mm | mm | mm | mm | mm | mm | mm | mm | mm | mm | mm | mm | mm | mm | mm | mm | mm | mm | mm | mm | mm | mm | mm | mm | mm | mm | mm | mm |
| **1** | 62 | 105 | 15 | 139 | 135 | 30 | 9 | 130 | 115 | 102 | 78 | 60 | 490 | 130 | 227 | 170 | - | 205 | 9 | 58 | 30,0 | 25 | 50 | 28 | 8 | 6 | 40 | 4 | M10 |
| **2** | 60 | 110 | 12 | 134 | 130 | 25 | 9 | 130 | 115 | 86 | 52 | 43 | 409 | 130 | 227 | 153 | - | 182 | - | - | - | 20 | 40 | 22,5 | 6 | 5 | 32 | 4 | M6 |
| **3** | 120 | 185 | 20 | 214 | 210 | 40 | 13 | 130 | 115 | 155 | 96 | 79 | 586 | 200 | 227 | 257 | 292 | 299 | 37 | 60 | 50,0 | 40 | 80 | 43 | 12 | 5 | 70 | 6 | M16 |
| **4** | 80 | 160 | 18 | 175 | 185 | 30 | 11 | 130 | 115 | 125 | 74 | 59 | 526 | 200 | 227 | 225 | - | 239 | 7 | 60 | 42,5 | 30 | 60 | 33 | 8 | 7 | 50 | 5 | M10 |
| **5** | 62 | 105 | 15 | 139 | 135 | 30 | 9 | 145 | 124 | 102 | 78 | 60 | 453 | 130 | 248 | 175 | - | 205 | - | - | - | 25 | 50 | 28 | 8 | 6 | 40 | 4 | M10 |
| **6** | 60 | 110 | 12 | 134 | 130 | 25 | 9 | 145 | 124 | 86 | 52 | 43 | 430 | 130 | 248 | 159 | - | 182 | - | - | - | 20 | 40 | 22,5 | 6 | 5 | 32 | 4 | M6 |
| **7** | 80 | 160 | 18 | 175 | 185 | 30 | 11 | 145 | 124 | 125 | 74 | 59 | 547 | 200 | 248 | 225 | - | 239 | 7 | 60 | 42,5 | 30 | 60 | 33 | 8 | 7 | 50 | 5 | M10 |
| **8** | 80 | 160 | 18 | 175 | 185 | 30 | 11 | 145 | 124 | 125 | 74 | 59 | 481 | 200 | 242 | 225 | - | 239 | - | - | - | 30 | 60 | 33 | 8 | 7 | 50 | 5 | M10 |
| **9** | 80 | 160 | 18 | 175 | 185 | 30 | 11 | 165 | 142 | 125 | 74 | 59 | 571 | 200 | 272 | 225 | - | 239 | 7 | 60 | 42,5 | 30 | 60 | 33 | 8 | 7 | 50 | 5 | M10 |
| **10** | 80 | 160 | 18 | 175 | 185 | 30 | 11 | 165 | 142 | 125 | 74 | 59 | 505 | 200 | 266 | 225 | - | 239 | - | - | - | 30 | 60 | 33 | 8 | 7 | 50 | 5 | M10 |
| **11** | 62 | 105 | 15 | 139 | 135 | 30 | 9 | 165 | 142 | 102 | 78 | 60 | 477 | 130 | 272 | 183 | - | 205 | - | - | - | 25 | 50 | 28 | 8 | 6 | 40 | 4 | M10 |
| **12** | 60 | 110 | 12 | 134 | 130 | 25 | 9 | 165 | 142 | 86 | 52 | 43 | 454 | 130 | 272 | 167 | - | 182 | - | - | - | 20 | 40 | 22,5 | 6 | 5 | 32 | 4 | M6 |
| **13** | 80 | 160 | 18 | 175 | 185 | 30 | 11 | 182 | 147 | 125 | 74 | 59 | 543 | 200 | 304 | 225 | - | 239 | - | - | - | 30 | 60 | 33 | 8 | 7 | 50 | 5 | M10 |
| **14** | 62 | 105 | 15 | 139 | 135 | 30 | 9 | 182 | 147 | 102 | 78 | 60 | 515 | 130 | 310 | 195 | - | 205 | - | - | - | 25 | 50 | 28 | 8 | 6 | 40 | 5 | M10 |

### Note

Standard model is B3 (= catalogue product number). Other models on request. The model/mounting position must always be stated, as different models/mounting positions require different oil volumes and venting positions.

## Worm Geared Motors

The worm geared motors on page 660 to 670 are delivered with the standard voltage 400 V for a mains frequency of 50 Hz. With help of the enclosed operating capacitor they can however be connected to 230 V, 50 Hz one-phase mains using the Steinmetz circuit. Please note that with this circuit, the power drops by 30 - 50% below the stated value.

The smaller gearboxes form a completely oil-proof and dust protected unit with the driving motors. The larger gearboxes are designed with ventilation. Before the start of operational use the sealing screw must be exchanged with the supplied venting screw.

All listed worm geared motors have the protection class IP 54 and can be supplied with an electromagnetically controlled disk brake (except for the 45 W motor on page 723). This makes the worm geared motor about 40mm longer.

The steel worms used are hardened and ground, while the worm gears are made from high-quality special brass with perfect gliding properties. In most applications, there is no relubrication or change of lubricant required. These worm geared motors are therefore suitable for low-maintenance applications.

**Gearbox and shaft position according to the respective dimensional drawing. Required ordering specifications: Type, voltage/frequency with or without operating capacitor, motor data, transmission ratio/output speed, product no.**

## Steinmetz Circuit

The three-phase motor can be connected to one-phase mains with the circuit pictured on the right using a capacitor! On the following pages the required capacitors are matched with their respective worm geared motors.

To change the sense of rotation the phase L1 has to be disconnected from the terminal U1 and connected to the terminal W1.

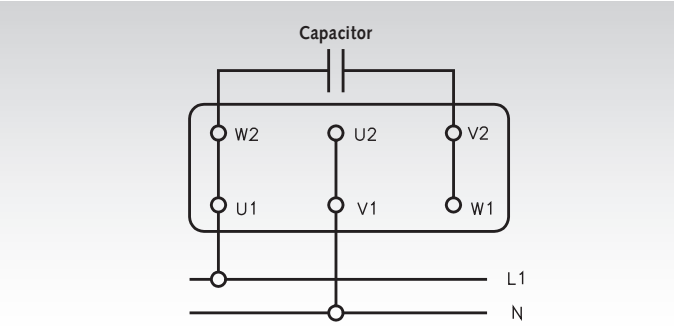


## Safety Note

Only qualified personnel should be authorized to work on the worm geared motors always regarding the safety regulations.

Before starting the assembly please read the enclosed operating and maintenance instructions.

## Operating Capacitors KST

Aluminium housing, metal-polypropylene. For 30,000 operating hours. According to VDE to 25µF. The capacitors have a protective cap made from aluminium and a 180mm cable connected on the side. On the bottom there is a mounting screw with toothed lock washer and nut.

**Technical Data:**
Capacity tolerance ±10%.
Frequency 50 to 60 Hz.
Voltage 400 V.
Loss < 0.3%.

Temperature range -25 to +85°C.
Insulation test voltage (2 Sec.) 2.5 kV (to ground).

| Product No. | Capacity µF | Ø x Length mm | Weight kg |
|---|---|---|---|
| **436 352 00** | 2,0 | 26 x 87 | 0,71 |
| **436 356 00** | 5,0 | 36 x 105 | 1,39 |
| **436 359 00** | 10,0 | 36 x 102 | 1,18 |
| **436 361 00** | 16,0 | 45 x 110 | 1,50 |
| **436 362 00** | 20,0 | 45 x 123 | 1,80 |
| **436 363 00** | 25,0 | 50 x 118 | 2,00 |

## Worm Geared Motors MEK with One-Stage Worm Gear Unit

230/400V, 50Hz, IP54, isolation class F, can also be connected to alternating current using an operating capacitor.

General data page 722.

Motor and gearbox with roller bearing.
Worms hardened and ground.
Worm gears made from special brass.

**Ordering details: Type, Voltage/Frequency, poss. Operating Capacitor, Motor Data, Ratio, Product No.**

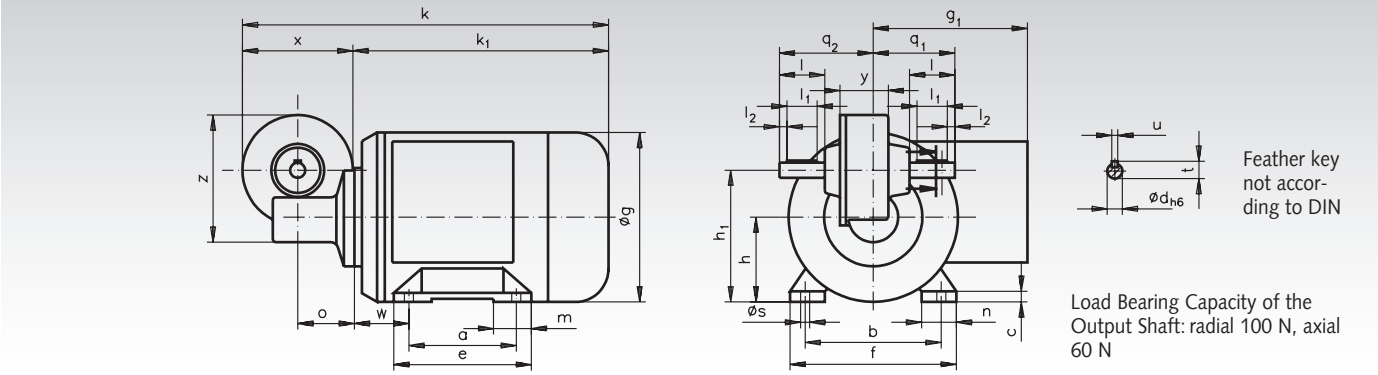


| Power Watt | a mm | b mm | c mm | e mm | f mm | h mm | $h_1$ mm | m mm | n mm | Øs mm | w mm | g mm | $g_1$ mm | k mm | $k_1$ mm | o mm | $q_1$ mm | $q_2$ mm | x mm | y mm | z mm | Ød mm | l mm | $l_1$ mm | $l_2$ mm | t mm | u m |
|---|---|---|---|---|---|---|---|---|---|---|---|---|---|---|---|---|---|---|---|---|---|---|---|---|---|---|---|
| **45** | 90 | 80 | 7 | 110 | 100 | 56 | 87 | 30 | 34 | 6,6 | 14 | 107 | 87 | 196 | 122 | 37,5 | 54 | 62 | 74 | 32 | 84 | 10 | 30 | 20 | 5 | 11,5 | 4 |
| **90** | 71 | 90 | 6 | 84 | 110 | 56 | 87 | 22 | 23 | 6 | 36 | 112 | 102 | 242 | 168 | 37,5 | 54 | 62 | 74 | 32 | 84 | 10 | 30 | 20 | 5 | 11,5 | 4 |

Dimensions without stated tolerances are non-binding!

### Motor Data without Ventilation 45 Watt, 1400 min$^{-1}$, ca. 0.18 A at 400 Volt

| Product No. | Output-Speed min$^{-1}$ | Ratio i = | Permiss. Torque at the Output Shaft Nm | Weight kg | Product No. Operating Capacitor 5µF |
|---|---|---|---|---|---|
| **433 01 005** | 280 | 5 : 1 | 1,2 | 3,7 | **436 356 00** |
| **433 01 007** | 200 | 7 : 1 | 1,7 | 3,7 | **436 356 00** |
| **433 01 010** | 140 | 10 : 1 | 2,1 | 3,7 | **436 356 00** |
| **433 01 015** | 93 | 15 : 1 | 3,0 | 3,7 | **436 356 00** |
| **433 01 020** | 70 | 20 : 1 | 3,7 | 3,7 | **436 356 00** |
| **433 01 024** | 58 | 24 : 1 | 3,6 | 3,7 | **436 356 00** |
| **433 01 030** | 47 | 30 : 1 | 4,5 | 3,7 | **436 356 00** |
| **433 01 038** | 37 | 38 : 1 | 5,6 | 3,7 | **436 356 00** |
| **433 01 050** | 28 | 50 : 1 | 5,7 | 3,7 | **436 356 00** |
| **433 01 055** | 25 | 55 : 1 | 7,3 | 3,7 | **436 356 00** |
| **433 01 075** | 19 | 75 : 1 | 6,4 | 3,7 | **436 356 00** |
| **433 01 100** | 14 | 100 : 1 | 8,9* | 3,7 | **436 356 00** |

* Stability related max. torque.

### Motor Data 90 Watt, 1400 min$^{-1}$, ca. 0.45 A at 400 Volt

| Product No. | Output-Speed min$^{-1}$ | Ratio i = | Permiss. Torque at the Output Shaft Nm | Weight kg | Product No. Operating Capacitor 10µF |
|---|---|---|---|---|---|
| **433 02 005** | 280 | 5 : 1 | 2,4 | 4,1 | **436 359 00** |
| **433 02 007** | 200 | 7 : 1 | 3,3 | 4,1 | **436 359 00** |
| **433 02 010** | 140 | 10 : 1 | 4,3 | 4,1 | **436 359 00** |
| **433 02 015** | 93 | 15 : 1 | 6,1 | 4,1 | **436 359 00** |
| **433 02 020** | 70 | 20 : 1 | 7,5 | 4,1 | **436 359 00** |
| **433 02 024** | 58 | 24 : 1 | 7,2 | 4,1 | **436 359 00** |
| **433 02 030** | 47 | 30 : 1 | 9,0 | 4,1 | **436 359 00** |
| **433 02 038** | 37 | 38 : 1 | 11,0 | 4,1 | **436 359 00** |
| **433 02 050** | 28 | 50 : 1 | 11,0* | 4,1 | **436 359 00** |
| **433 02 055** | 25 | 55 : 1 | 13,0* | 4,1 | **436 359 00** |
| **433 02 075** | 19 | 75 : 1 | 8,8* | 4,1 | **436 359 00** |
| **433 02 100** | 14 | 100 : 1 | 8,9* | 4,1 | **436 359 00** |

* Stability related max. torque.

## Worm Geared Motors MEG with One-Stage Worm Gear Unit

230/400V, 50Hz, IP54, isolation class F, can also be connected to alternating current using an operating capacitor.

General data page 722.

Motor and gearbox with roller bearing.
Worms hardened and ground.
Worm gears made from special brass.

**Ordering details: Type, Voltage/Frequency, poss. Operating Capacitor, Motor Data, Ratio, Product No.**

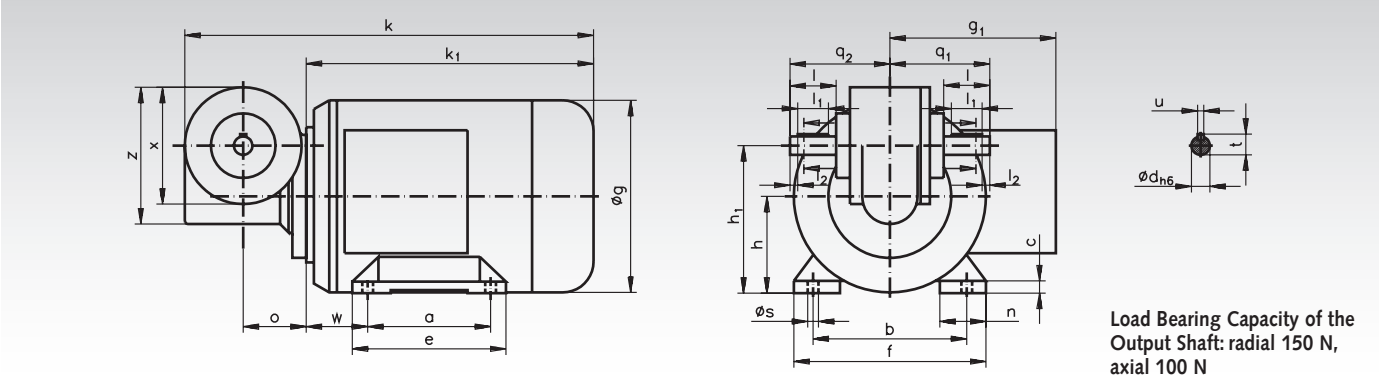


**Load Bearing Capacity of the Output Shaft: radial 150 N, axial 100 N**

| a mm | b mm | c mm | e mm | f mm | h mm | $h_1$ mm | n mm | Ø s mm | w mm | g mm | $g_1$ mm | k mm | $k_1$ mm | o mm | $q_1$ mm | $q_2$ mm | x mm | z mm | Ø d mm | l mm | $l_1$ mm | $l_2$ mm | t mm | u mm |
|---|---|---|---|---|---|---|---|---|---|---|---|---|---|---|---|---|---|---|---|---|---|---|---|---|
| 80 | 100 | 7,5 | 96 | 122 | 63 | 96 | 25 | 7 | 40 | 125 | 108 | 266 | 187 | 41 | 65 | 65 | 76 | 89 | 12 | 30 | 20 | 5 | 13,5 | 4 |

**Dimensions without stated tolerances are non-binding!**

### Motor Data 180 Watt, 1400 min$^{-1}$, ca. 0.7 A at 400 Volt

| Product No. | Output-Speed min$^{-1}$ | Ratio i = | Permiss. Torque at the Output Shaft Nm | Weight kg | Product No. Operating Capacitor 20µF |
|---|---|---|---|---|---|
| **433 05 005** | 280 | 5 : 1 | 4,8 | 6,2 | **436 362 00** |
| **433 05 007** | 200 | 7 : 1 | 6,4 | 6,2 | **436 362 00** |
| **433 05 011** | 124 | 11 : 1 | 9,3 | 6,2 | **436 362 00** |
| **433 05 015** | 93 | 15 : 1 | 11 | 6,2 | **436 362 00** |
| **433 05 017** | 82 | 17 : 1 | 13 | 6,2 | **436 362 00** |
| **433 05 020** | 70 | 20 : 1 | 14 | 6,2 | **436 362 00** |
| **433 05 024** | 58 | 24 : 1 | 15 | 6,2 | **436 362 00** |
| **433 05 030** | 47 | 30 : 1 | 15* | 6,2 | **436 362 00** |
| **433 05 032** | 44 | 32 : 1 | 16* | 6,2 | **436 362 00** |
| **433 05 038** | 37 | 38 : 1 | 17* | 6,2 | **436 362 00** |
| **433 05 056** | 25 | 56 : 1 | 12* | 6,2 | **436 362 00** |
| **433 05 075** | 19 | 75 : 1 | 11* | 6,2 | **436 362 00** |

* Stability related max. torque.

### Motor Data 250 Watt, 2800 min$^{-1}$, ca. 0.75 A at 400 Volt

| Product No. | Output-Speed min$^{-1}$ | Ratio i = | Permiss. Torque at the Output Shaft Nm | Weight kg | Product No. Operating Capacitor 25µF |
|---|---|---|---|---|---|
| **433 06 005** | 560 | 5 : 1 | 3,5 | 6,3 | **436 363 00** |
| **433 06 007** | 400 | 7 : 1 | 4,6 | 6,3 | **436 363 00** |
| **433 06 011** | 247 | 11 : 1 | 6,8 | 6,3 | **436 363 00** |
| **433 06 015** | 187 | 15 : 1 | 8,3 | 6,3 | **436 363 00** |
| **433 06 017** | 165 | 17 : 1 | 9,6 | 6,3 | **436 363 00** |
| **433 06 020** | 140 | 20 : 1 | 10 | 6,3 | **436 363 00** |
| **433 06 024** | 117 | 24 : 1 | 11 | 6,3 | **436 363 00** |
| **433 06 030** | 93 | 30 : 1 | 13 | 6,3 | **436 363 00** |
| **433 06 032** | 88 | 32 : 1 | 14 | 6,3 | **436 363 00** |
| **433 06 038** | 74 | 38 : 1 | 15 | 6,3 | **436 363 00** |
| **433 06 056** | 50 | 56 : 1 | 12* | 6,3 | **436 363 00** |
| **433 06 075** | 37 | 75 : 1 | 11* | 6,3 | **436 363 00** |

* Stability related max. torque.

## Worm Geared Motors MH with One-Stage Worm Gear Unit and Hollow Shaft

230/400V, 50Hz, IP54, isolation class F, can also be connected to alternating current using an operating capacitor.

General data page 722.

Motor and gearbox with roller bearing.
Worms hardened and ground.
Worm gears made from special brass.

**Ordering details: Type, Voltage/Frequency, poss. Operating Capacitor, Motor Data, Ratio, Product No.**

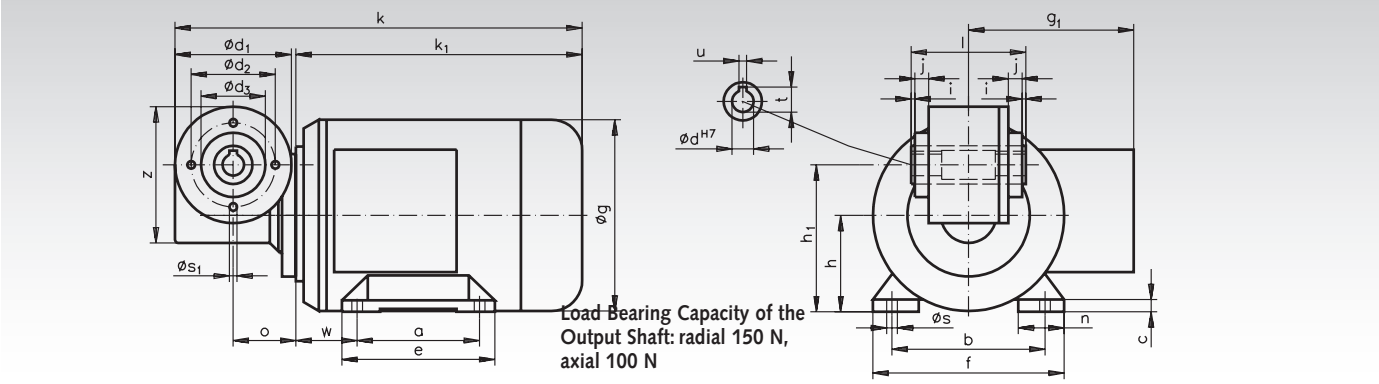


**Load Bearing Capacity of the Output Shaft: radial 150 N, axial 100 N**

| a mm | b mm | c mm | Ød1 mm | Ød2 mm | Ød3 mm | e mm | f mm | h mm | h1 mm | j mm | n mm | Øs mm | Øs1 mm | w mm | g mm | g1 mm | k mm | k1 mm | o mm | z mm | Ød mm | i mm | l mm | t mm | u mm |
|---|---|---|---|---|---|---|---|---|---|---|---|---|---|---|---|---|---|---|---|---|---|---|---|---|---|
| 80 | 100 | 7,5 | 76 | 55 | 42 | 96 | 122 | 63 | 96 | 9 | 25 | 7 | M5 | 40 | 125 | 108 | 266 | 187 | 41 | 89 | 14 | 3 | 75 | 16,3 | 5 |

**Hollow shaft centre 35mm relieved!**
**Dimensions without stated tolerances are non-binding!**

### Motor Data 180 Watt, 1400 min$^{-1}$, ca. 0.7 A at 400 Volt

| Product No. | Output-Speed min$^{-1}$ | Ratio i = | Permiss. Torque at the Output Shaft Nm | Weight kg | Product No. Operating Capacitor 20µF |
|---|---|---|---|---|---|
| 433 30 005 | 280 | 5 : 1 | 4,8 | 6,4 | 436 362 00 |
| 433 30 007 | 200 | 7 : 1 | 6,4 | 6,4 | 436 362 00 |
| 433 30 011 | 124 | 11 : 1 | 9,3 | 6,4 | 436 362 00 |
| 433 30 015 | 93 | 15 : 1 | 11 | 6,4 | 436 362 00 |
| 433 30 017 | 82 | 17 : 1 | 13 | 6,4 | 436 362 00 |
| 433 30 020 | 70 | 20 : 1 | 14 | 6,4 | 436 362 00 |
| 433 30 024 | 58 | 24 : 1 | 15 | 6,4 | 436 362 00 |
| 433 30 030 | 47 | 30 : 1 | 15* | 6,4 | 436 362 00 |
| 433 30 032 | 44 | 32 : 1 | 16* | 6,4 | 436 362 00 |
| 433 30 038 | 37 | 38 : 1 | 17* | 6,4 | 436 362 00 |
| 433 30 056 | 25 | 56 : 1 | 12* | 6,4 | 436 362 00 |
| 433 30 075 | 19 | 75 : 1 | 11* | 6,4 | 436 362 00 |

*** Stability related max. torque.**

### Motor Data 250 Watt, 2800 min$^{-1}$, ca. 0.75 A at 400 Volt

| Product No. | Output-Speed min$^{-1}$ | Ratio i = | Permiss. Torque at the Output Shaft Nm | Weight kg | Product No. Operating Capacitor 25µF |
|---|---|---|---|---|---|
| 433 31 005 | 560 | 5 : 1 | 3,5 | 6,5 | 436 363 00 |
| 433 31 007 | 400 | 7 : 1 | 4,6 | 6,5 | 436 363 00 |
| 433 31 011 | 247 | 11 : 1 | 6,8 | 6,5 | 436 363 00 |
| 433 31 015 | 187 | 15 : 1 | 8,3 | 6,5 | 436 363 00 |
| 433 31 017 | 165 | 17 : 1 | 9,6 | 6,5 | 436 363 00 |
| 433 31 020 | 140 | 20 : 1 | 10 | 6,5 | 436 363 00 |
| 433 31 024 | 117 | 24 : 1 | 11 | 6,5 | 436 363 00 |
| 433 31 030 | 93 | 30 : 1 | 13 | 6,5 | 436 363 00 |
| 433 31 032 | 88 | 32 : 1 | 14 | 6,5 | 436 363 00 |
| 433 31 038 | 74 | 38 : 1 | 15 | 6,5 | 436 363 00 |
| 433 31 056 | 50 | 56 : 1 | 12* | 6,5 | 436 363 00 |
| 433 31 075 | 37 | 75 : 1 | 11* | 6,5 | 436 363 00 |

*** Stability related max. torque.**

## Worm Helical Geared Motors SRM

230/400V, 50Hz, IP54, isolation class F, can also be connected to alternating current using an operating capacitor.

General data page 722.

Motor and output shaft with roller bearing.
Intermediate shaft with slide bearing.
1st stage: Worms hardened and ground,
Worm gears special brass.
2nd stage: Helical gear set hardened and ground.

**Ordering details: Type, Voltage/Frequency, poss. Operating Capacitor, Motor Data, Ratio, Product No.**

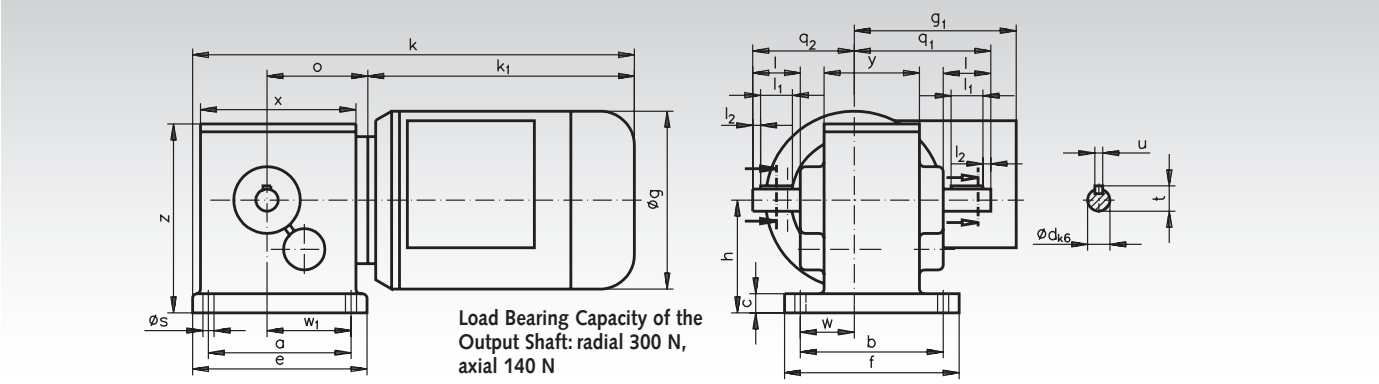


**Load Bearing Capacity of the Output Shaft: radial 300 N, axial 140 N**

| a mm | b mm | c mm | e mm | f mm | h mm | Ø s mm | w mm | $w_1$ mm | g mm | $g_1$ mm | k mm | $k_1$ mm | o mm | $q_1$ mm | $q_2$ mm | x mm | y mm | z mm | Ø d mm | l mm | $l_1$ mm | $l_2$ mm | t mm | u mm |
|---|---|---|---|---|---|---|---|---|---|---|---|---|---|---|---|---|---|---|---|---|---|---|---|---|
| 90 | 90 | 12 | 110 | 110 | 71 | 7 | 34 | 53 | 112 | 102 | 278,5 | 168 | 63,5 | 86 | 64 | 98 | 60 | 119 | 14 | 30 | 20 | 5 | 16 | 5 |

**Dimensions without stated tolerances are non-binding!**

### Motor Data 90 Watt, 1400 min$^{-1}$, ca. 0.45 A at 400 Volt

| Product No. | Output-Speed min$^{-1}$ | Ratio i = | Permiss. Torque at the Output Shaft Nm | Weight kg | Product No. Operating Capacitor 10µF |
|---|---|---|---|---|---|
| **434 50 012** | 112 | 12,5 : 1 | 6,1 | 5,2 | **436 359 00** |
| **434 50 021** | 65 | 21 : 1 | 10 | 5,2 | **436 359 00** |
| **434 50 025** | 56 | 25 : 1 | 12 | 5,2 | **436 359 00** |
| **434 50 035** | 40 | 35 : 1 | 16 | 5,2 | **436 359 00** |
| **434 50 060** | 23 | 60 : 1 | 24 | 5,2 | **436 359 00** |
| **434 50 090** | 16 | 90 : 1 | 25* | 5,2 | **436 359 00** |
| **434 50 100** | 14 | 100 : 1 | 25* | 5,2 | **436 359 00** |
| **434 50 120** | 12 | 120 : 1 | 25* | 5,2 | **436 359 00** |
| **434 50 150** | 9,3 | 150 : 1 | 25* | 5,2 | **436 359 00** |
| **434 50 190** | 7,4 | 190 : 1 | 25* | 5,2 | **436 359 00** |
| **434 50 375** | 3,7 | 375 : 1 | 25* | 5,2 | **436 359 00** |
| **434 50 500** | 2,8 | 500 : 1 | 25* | 5,2 | **436 359 00** |

* Stability related max. torque.

### Motor Data 120 Watt, 2800 min$^{-1}$, ca. 0.5 A at 400 Volt

| Product No. | Output-Speed min$^{-1}$ | Ratio i = | Permiss. Torque at the Output Shaft Nm | Weight kg | Product No. Operating Capacitor 16µF |
|---|---|---|---|---|---|
| **434 51 012** | 224 | 12,5 : 1 | 4,1 | 5,2 | **436 361 00** |
| **434 51 021** | 131 | 21 : 1 | 6,8 | 5,2 | **436 361 00** |
| **434 51 025** | 112 | 25 : 1 | 8 | 5,2 | **436 361 00** |
| **434 51 035** | 80 | 35 : 1 | 11 | 5,2 | **436 361 00** |
| **434 51 060** | 47 | 60 : 1 | 17 | 5,2 | **436 361 00** |
| **434 51 090** | 31 | 90 : 1 | 23 | 5,2 | **436 361 00** |
| **434 51 100** | 28 | 100 : 1 | 25* | 5,2 | **436 361 00** |
| **434 51 120** | 23 | 120 : 1 | 25* | 5,2 | **436 361 00** |
| **434 51 150** | 19 | 150 : 1 | 25* | 5,2 | **436 361 00** |
| **434 51 190** | 15 | 190 : 1 | 25* | 5,2 | **436 361 00** |
| **434 51 375** | 7,5 | 375 : 1 | 25* | 5,2 | **436 361 00** |
| **434 51 500** | 5,6 | 500 : 1 | 25* | 5,2 | **436 361 00** |

* Stability related max. torque.

## Worm Geared Motors R with One-Stage Worm Gears

230/400V, 50Hz, IP54, isolation class F, can also be connected to alternating current using an operating capacitor.

General data page 722.

Motor and gearbox with roller bearing.
Worms hardened and ground.
Worm gears made from special brass.

**Ordering details: Type, Voltage/Frequency, possibly Operating Capacitor, Motor Data, Ratio, Product No.**

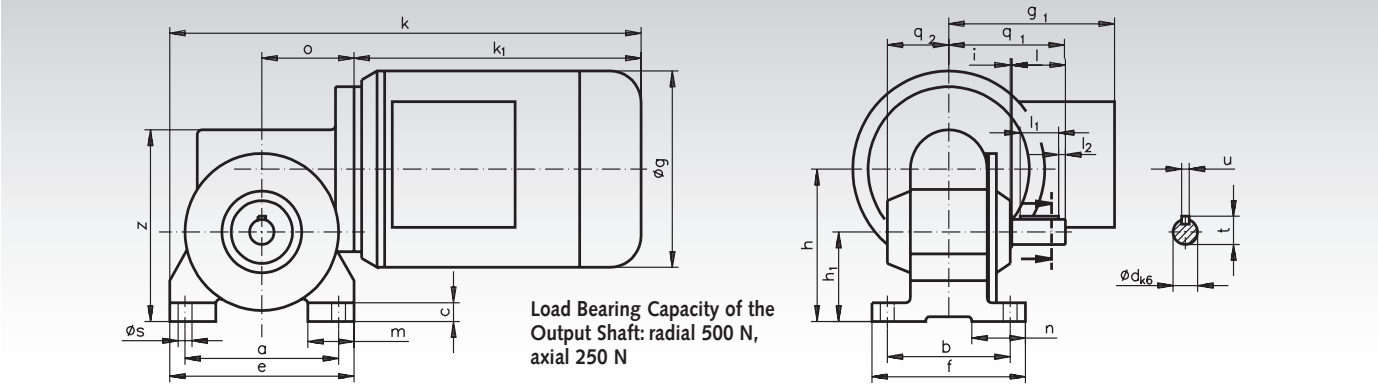


**Load Bearing Capacity of the Output Shaft: radial 500 N, axial 250 N**

| Power Watt | a mm | b mm | c mm | e mm | f mm | h mm | $h_1$ mm | m mm | n mm | Øs mm | g mm | $g_1$ mm | k mm | $k_1$ mm | o mm | $q_1$ mm | $q_2$ mm | z mm | Ød mm | i mm | l mm | $l_1$ mm | $l_2$ mm | t mm | u mm |
|---|---|---|---|---|---|---|---|---|---|---|---|---|---|---|---|---|---|---|---|---|---|---|---|---|---|
| **180** | 100 | 80 | 12 | 120 | 100 | 97 | 57 | 30 | 35 | 9 | 125 | 108 | 307 | 187 | 60 | 76 | 40 | 122 | 16 | 1 | 35 | 25 | 5 | 18 | 5 |
| **250** | 100 | 80 | 12 | 120 | 100 | 97 | 57 | 30 | 35 | 9 | 140 | 114 | 327 | 207 | 60 | 76 | 40 | 122 | 16 | 1 | 35 | 25 | 5 | 18 | 5 |

**Dimensions without stated tolerances are non-binding!**

### Motor Data 180 Watt, 1400 min$^{-1}$, ca. 0.7 A at 400 Volt

| Product No. | Output-Speed min$^{-1}$ | Ratio i = | Permiss. Torque at the Output Shaft Nm | Weight kg | Product No. Operating Capacitor 20µF |
|---|---|---|---|---|---|
| **433 08 007** | 207 | 7 : 1 | 6,5 | 6,5 | **436 362 00** |
| **433 08 008** | 175 | 8 : 1 | 7,4 | 6,5 | **436 362 00** |
| **433 08 010** | 140 | 10 : 1 | 9,1 | 6,5 | **436 362 00** |
| **433 08 012** | 117 | 12 : 1 | 10 | 6,5 | **436 362 00** |
| **433 08 015** | 93 | 15 : 1 | 12 | 6,5 | **436 362 00** |
| **433 08 020** | 70 | 20 : 1 | 15 | 6,5 | **436 362 00** |
| **433 08 025** | 56 | 25 : 1 | 17 | 6,5 | **436 362 00** |
| **433 08 030** | 47 | 30 : 1 | 20 | 6,5 | **436 362 00** |
| **433 08 040** | 35 | 40 : 1 | 23 | 6,5 | **436 362 00** |
| **433 08 050** | 28 | 50 : 1 | 27 | 6,5 | **436 362 00** |
| **433 08 060** | 23 | 60 : 1 | 21 | 6,5 | **436 362 00** |
| **433 08 080** | 18 | 80 : 1 | 24* | 6,5 | **436 362 00** |

* Stability related max. torque.

### Motor Data 250 Watt, 1400 min$^{-1}$, ca. 0,8 A at 400 Volt

| Product No. | Output-Speed min$^{-1}$ | Ratio i = | Permiss. Torque at the Output Shaft Nm | Weight kg | Product No. Operating Capacitor 25µF |
|---|---|---|---|---|---|
| **433 09 007** | 207 | 7 : 1 | 9 | 7,8 | **436 363 00** |
| **433 09 008** | 175 | 8 : 1 | 10 | 7,8 | **436 363 00** |
| **433 09 010** | 140 | 10 : 1 | 13 | 7,8 | **436 363 00** |
| **433 09 012** | 117 | 12 : 1 | 14 | 7,8 | **436 363 00** |
| **433 09 015** | 93 | 15 : 1 | 17 | 7,8 | **436 363 00** |
| **433 09 020** | 70 | 20 : 1 | 21 | 7,8 | **436 363 00** |
| **433 09 025** | 56 | 25 : 1 | 23 | 7,8 | **436 363 00** |
| **433 09 030** | 47 | 30 : 1 | 27 | 7,8 | **436 363 00** |
| **433 09 040** | 35 | 40 : 1 | 31 | 7,8 | **436 363 00** |
| **433 09 050** | 28 | 50 : 1 | 32* | 7,8 | **436 363 00** |
| **433 09 060** | 23 | 60 : 1 | 23* | 7,8 | **436 363 00** |
| **433 09 080** | 18 | 80 : 1 | 24* | 7,8 | **436 363 00** |

* Stability related max. torque.

## Worm Geared Motors RH with One-Stage Worm Gears and Hollow Shafts

230/400V, 50Hz, IP54, isolation class F, can also be connected to alternating current using an operating capacitor.

General data page 722.

Motor and gearbox with roller bearing.
Worms hardened and ground.
Worm gears made from special brass.

**Ordering details: Type, Voltage/Frequency, possibl. Operating Capacitor, Motor Data, Ratio, Product No.**

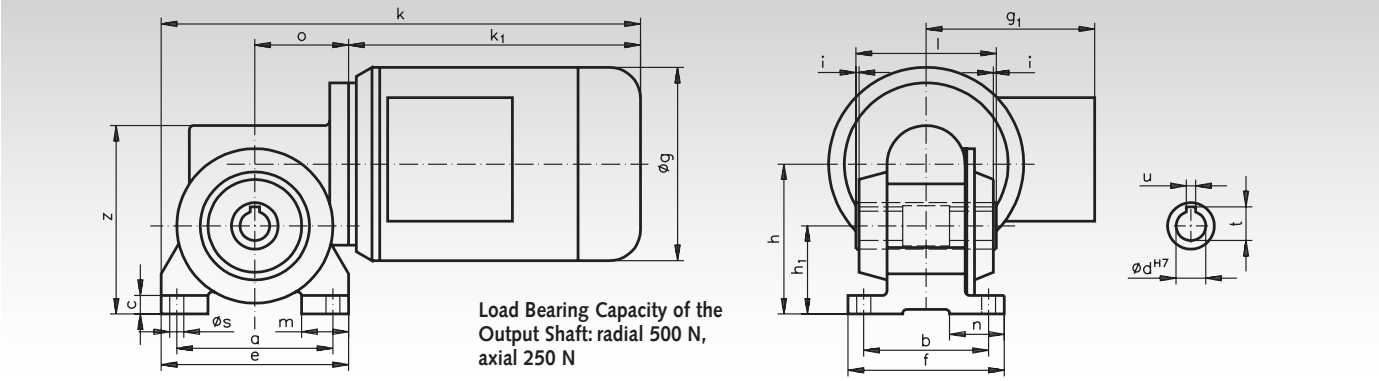


**Load Bearing Capacity of the Output Shaft: radial 500 N, axial 250 N**

| Power Watt | a mm | b mm | c mm | e mm | f mm | h mm | $h_1$ mm | m mm | n mm | Øs mm | g mm | $g_1$ mm | k mm | $k_1$ mm | o mm | z mm | Ød mm | i mm | l mm | t mm | u mm |
|---|---|---|---|---|---|---|---|---|---|---|---|---|---|---|---|---|---|---|---|---|---|
| 180 | 100 | 80 | 12 | 120 | 100 | 97 | 57 | 30 | 35 | 9 | 125 | 108 | 307 | 187 | 60 | 122 | 19 | 2 | 90 | 21,8 | 6 |
| 250 | 100 | 80 | 12 | 120 | 100 | 97 | 57 | 30 | 35 | 9 | 140 | 114 | 327 | 207 | 60 | 122 | 19 | 2 | 90 | 21,8 | 6 |

**Hollow shaft centre 30mm relieved!**
**Dimensions without stated tolerances are non-binding!**

### Motor Data 180 Watt, 1400 min$^{-1}$, ca. 0.7 A at 400 Volt

| Product No. | Output-Speed min$^{-1}$ | Ratio i = | Permiss. Torque at the Output Shaft Nm | Weight kg | Product No. Operating Capacitor 20µF |
|---|---|---|---|---|---|
| 433 36 007 | 207 | 7 : 1 | 6,5 | 6,9 | 436 362 00 |
| 433 36 008 | 175 | 8 : 1 | 7,4 | 6,9 | 436 362 00 |
| 433 36 010 | 140 | 10 : 1 | 9,1 | 6,9 | 436 362 00 |
| 433 36 012 | 117 | 12 : 1 | 10 | 6,9 | 436 362 00 |
| 433 36 015 | 93 | 15 : 1 | 12 | 6,9 | 436 362 00 |
| 433 36 020 | 70 | 20 : 1 | 15 | 6,9 | 436 362 00 |
| 433 36 025 | 56 | 25 : 1 | 17 | 6,9 | 436 362 00 |
| 433 36 030 | 47 | 30 : 1 | 20 | 6,9 | 436 362 00 |
| 433 36 040 | 35 | 40 : 1 | 23 | 6,9 | 436 362 00 |
| 433 36 050 | 28 | 50 : 1 | 27 | 6,9 | 436 362 00 |
| 433 36 060 | 23 | 60 : 1 | 21 | 6,9 | 436 362 00 |
| 433 36 080 | 18 | 80 : 1 | 24* | 6,9 | 436 362 00 |

* Stability related max. torque.

### Motor Data 250 Watt, 1400 min$^{-1}$, ca. 0.8 A at 400 Volt

| Product No. | Output-Speed min$^{-1}$ | Ratio i = | Permiss. Torque at the Output Shaft Nm | Weight kg | Product No. Operating Capacitor 25µF |
|---|---|---|---|---|---|
| 433 37 007 | 207 | 7 : 1 | 9 | 8,2 | 436 363 00 |
| 433 37 008 | 175 | 8 : 1 | 10 | 8,2 | 436 363 00 |
| 433 37 010 | 140 | 10 : 1 | 13 | 8,2 | 436 363 00 |
| 433 37 012 | 117 | 12 : 1 | 14 | 8,2 | 436 363 00 |
| 433 37 015 | 93 | 15 : 1 | 17 | 8,2 | 436 363 00 |
| 433 37 020 | 70 | 20 : 1 | 21 | 8,2 | 436 363 00 |
| 433 37 025 | 56 | 25 : 1 | 23 | 8,2 | 436 363 00 |
| 433 37 030 | 47 | 30 : 1 | 27 | 8,2 | 436 363 00 |
| 433 37 040 | 35 | 40 : 1 | 31 | 8,2 | 436 363 00 |
| 433 37 050 | 28 | 50 : 1 | 32* | 8,2 | 436 363 00 |
| 433 37 060 | 23 | 60 : 1 | 23* | 8,2 | 436 363 00 |
| 433 37 080 | 18 | 80 : 1 | 24* | 8,2 | 436 363 00 |

* Stability related max. torque.

## Worm Helical Geared Motors SRS

230/400V, 50Hz, IP54, isolation class F, can also be connected to alternating current using an operating capacitor.

General data page 722.

Motor and gear shaft with roller bearing.
1st stage: Worms hardened and ground,
Worm gears special brass.
2nd stage: Helical gear set hardened and ground.

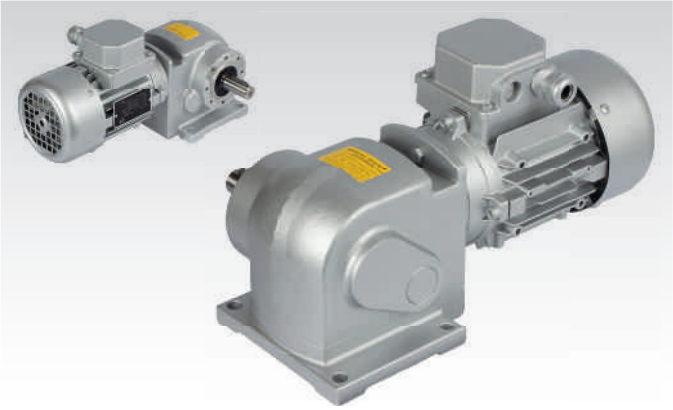

**Ordering details: Type, Voltage/Frequency, possibl. Operating Capacitor, Motor Data, Ratio, Product No.**

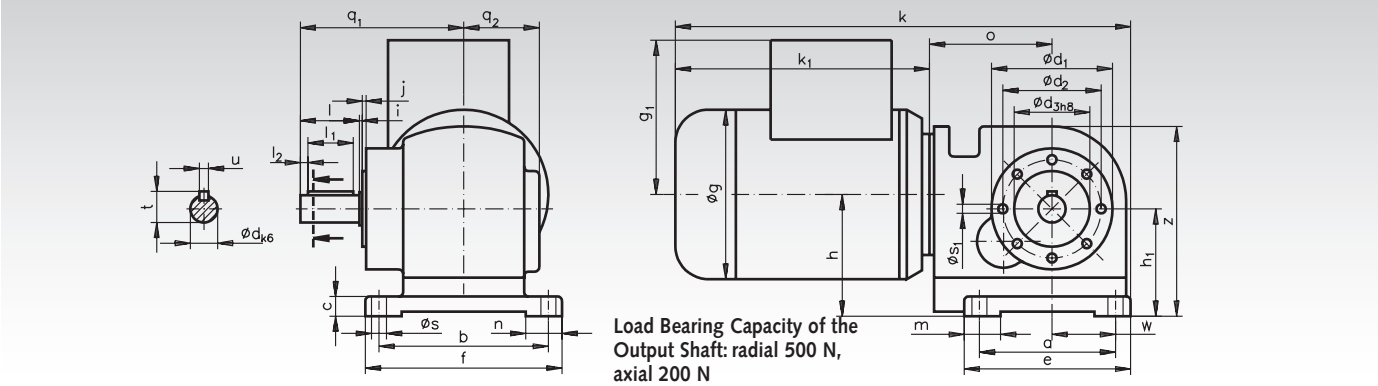


**Load Bearing Capacity of the Output Shaft: radial 500 N, axial 200 N**

| a | b | c | Ød1 | Ød2 | Ød3 | e | f | h | h1 | j | m | n | Øs | Øs1 | w | g | g1 | k | k1 | o | q1 | q2 | z | Ød | i | l | l1 | l2 | t | u |
|---|---|---|---|---|---|---|---|---|---|---|---|---|---|---|---|---|---|---|---|---|---|---|---|---|---|---|---|---|---|---|
| mm | mm | mm | mm | mm | mm | mm | mm | mm | mm | mm | mm | mm | mm | mm | mm | mm | mm | mm | mm | mm | mm | mm | mm | mm | mm | mm | mm | mm | mm | mm |
| 90 | 112 | 13 | 80 | 65 | 50 | 110 | 130 | 80,5 | 70,9 | 2,5 | 24 | 24 | 10 | M5 | 42 | 112 | 102 | 301 | 168 | 81 | 108 | 50 | 125,5 | 18 | 0,8 | 40 | 30 | 5 | 20,5 | 6 |

**Dimensions without stated tolerances are non-binding!**

### Motor Data 90 Watt, 1400 min-1, ca. 0.45 A at 400 Volt

| Product No. | Output-Speed min-1 | Ratio i = | Permiss. Torque at the Output Shaft Nm | Weight kg | Product No. Operating Capacitor 10µF |
|---|---|---|---|---|---|
| 434 55 015 | 95 | 15 : 1 | 7,2 | 6,6 | 436 359 00 |
| 434 55 030 | 47 | 30 : 1 | 14 | 6,6 | 436 359 00 |
| 434 55 041 | 34 | 41 : 1 | 19 | 6,6 | 436 359 00 |
| 434 55 059 | 24 | 59 : 1 | 24 | 6,6 | 436 359 00 |
| 434 55 071 | 20 | 71 : 1 | 29 | 6,6 | 436 359 00 |
| 434 55 089 | 16 | 89 : 1 | 34 | 6,6 | 436 359 00 |
| 434 55 106 | 13 | 106 : 1 | 38 | 6,6 | 436 359 00 |
| 434 55 142 | 10 | 142 : 1 | 41 | 6,6 | 436 359 00 |
| 434 55 177 | 7,9 | 177 : 1 | 50* | 6,6 | 436 359 00 |
| 434 55 295 | 4,7 | 295 : 1 | 50* | 6,6 | 436 359 00 |
| 434 55 443 | 3,2 | 443 : 1 | 50* | 6,6 | 436 359 00 |
| 434 55 591 | 2,4 | 591 : 1 | 50* | 6,6 | 436 359 00 |

* Stability related max. torque.

### Motor Data 120 Watt, 2800 min-1, ca. 0.5 A at 400 Volt

| Product No. | Output-Speed min-1 | Ratio i = | Permiss. Torque at the Output Shaft Nm | Weight kg | Product No. Operating Capacitor 16µF |
|---|---|---|---|---|---|
| 434 56 015 | 190 | 15 : 1 | 4,9 | 6,6 | 436 361 00 |
| 434 56 030 | 95 | 30 : 1 | 9,4 | 6,6 | 436 361 00 |
| 434 56 041 | 68 | 41 : 1 | 13 | 6,6 | 436 361 00 |
| 434 56 059 | 47 | 59 : 1 | 17 | 6,6 | 436 361 00 |
| 434 56 071 | 39 | 71 : 1 | 20 | 6,6 | 436 361 00 |
| 434 56 089 | 32 | 89 : 1 | 24 | 6,6 | 436 361 00 |
| 434 56 106 | 26 | 106 : 1 | 27 | 6,6 | 436 361 00 |
| 434 56 142 | 20 | 142 : 1 | 30 | 6,6 | 436 361 00 |
| 434 56 177 | 16 | 177 : 1 | 37 | 6,6 | 436 361 00 |
| 434 56 295 | 9,5 | 295 : 1 | 46 | 6,6 | 436 361 00 |
| 434 56 443 | 6,3 | 443 : 1 | 50* | 6,6 | 436 361 00 |
| 434 56 591 | 4,7 | 591 : 1 | 50* | 6,6 | 436 361 00 |

* Stability related max. torque.

## Worm Geared Motors MZ with Two-Stage Worm Gears

230/400V, 50Hz, IP54, isolation class F, can also be connected to alternating current using an operating capacitor.

General data page 722.

Motor with roller bearing, gearbox with slide bearing.
Worms hardened and ground.
Worm gears made from special bronze.

**Ordering details: Type, Voltage/Frequency, possibly Operating Capacitor, Motor Data, Ratio, Product No.**

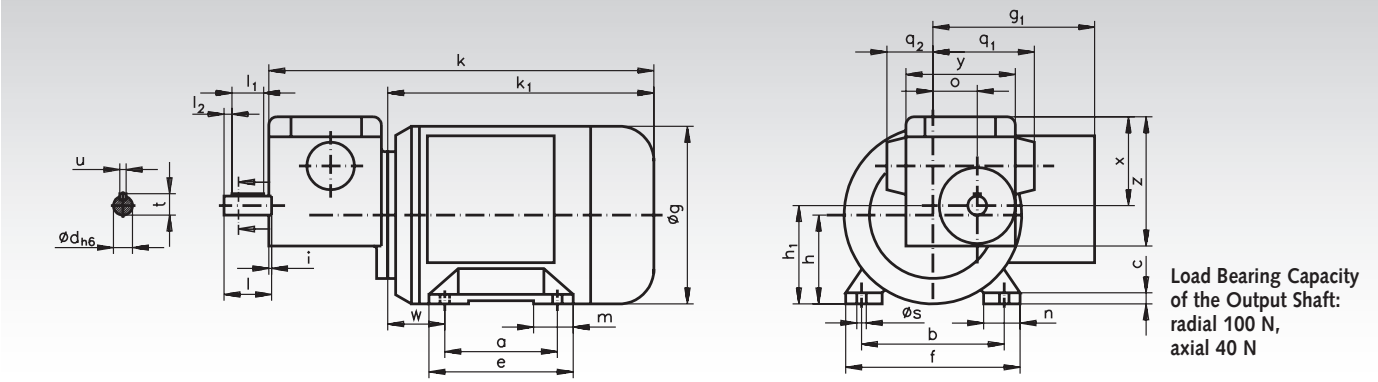


**Load Bearing Capacity of the Output Shaft: radial 100 N, axial 40 N**

| a | b | c | e | f | h | $h_1$ | m | n | Ø s | w | g | $g_1$ | k | $k_1$ | o | $q_1$ | $q_2$ | x | y | z | Ø d | i | l | $l_1$ | $l_2$ | t | u |
|---|---|---|---|---|---|---|---|---|---|---|---|---|---|---|---|---|---|---|---|---|---|---|---|---|---|---|---|
| mm | mm | mm | mm | mm | mm | mm | mm | mm | mm | mm | mm | mm | mm | mm | mm | mm | mm | mm | mm | mm | mm | mm | mm | mm | mm | mm | mm |
| 71 | 90 | 6 | 84 | 110 | 56 | 62 | 22 | 23 | 6 | 36 | 112 | 102 | 243 | 168 | 28 | 64 | 30 | 56 | 70 | 81 | 12 | 1 | 30 | 20 | 5 | 13,5 | 4 |

**Dimensions without stated tolerances are non-binding!**

## Motor Data 90 Watt, 1400 min$^{-1}$, ca. 0.45 A at 400 Volt

| Product No. | Output-Speed min$^{-1}$ | Ratio i = | Permiss. Torque at the Output Shaft Nm | Weight kg | Product No. Operating Capacitor 10µF |
|---|---|---|---|---|---|
| **434 02 012** | 112 | 12,5 : 1 | 4,8* | 4,2 | **436 359 00** |
| **434 02 025** | 56 | 25 : 1 | 7,8* | 4,2 | **436 359 00** |
| **434 02 050** | 28 | 50 : 1 | 7,8* | 4,2 | **436 359 00** |
| **434 02 070** | 20 | 70 : 1 | 7,1* | 4,2 | **436 359 00** |
| **434 02 100** | 14 | 100 : 1 | 6,1* | 4,2 | **436 359 00** |
| **434 02 125** | 11 | 125 : 1 | 7,8* | 4,2 | **436 359 00** |
| **434 02 250** | 5,6 | 250 : 1 | 7,1* | 4,2 | **436 359 00** |
| **434 02 400** | 3,5 | 400 : 1 | 7,4* | 4,2 | **436 359 00** |
| **434 02 750** | 1,9 | 750 : 1 | 7,1* | 4,2 | **436 359 00** |
| **434 02 990** | 1,1 | 1250 : 1 | 6,1* | 4,2 | **436 359 00** |
| **434 02 992** | 0,9 | 1500 : 1 | 7,1* | 4,2 | **436 359 00** |

* Stability related max. torque.

## Motor Data 120 Watt, 2800 min$^{-1}$, ca. 0.5 A at 400 Volt

| Product No. | Output-Speed min$^{-1}$ | Ratio i = | Permiss. Torque at the Output Shaft Nm | Weight kg | Product No. Operating Capacitor 16µF |
|---|---|---|---|---|---|
| **434 03 012** | 224 | 12,5 : 1 | 3,4 | 4,2 | **436 361 00** |
| **434 03 025** | 112 | 25 : 1 | 6,6 | 4,2 | **436 361 00** |
| **434 03 050** | 56 | 50 : 1 | 7,8* | 4,2 | **436 361 00** |
| **434 03 070** | 40 | 70 : 1 | 7,1* | 4,2 | **436 361 00** |
| **434 03 100** | 28 | 100 : 1 | 6,1* | 4,2 | **436 361 00** |
| **434 03 125** | 22 | 125 : 1 | 7,8* | 4,2 | **436 361 00** |
| **434 03 250** | 11 | 250 : 1 | 7,1* | 4,2 | **436 361 00** |
| **434 03 400** | 7 | 400 : 1 | 7,4* | 4,2 | **436 361 00** |
| **434 03 750** | 3,7 | 750 : 1 | 7,1* | 4,2 | **436 361 00** |
| **434 03 990** | 2,2 | 1250 : 1 | 6,1* | 4,2 | **436 361 00** |
| **434 03 992** | 1,9 | 1500 : 1 | 7,1* | 4,2 | **436 361 00** |

* Stability related max. torque.

## Worm Geared Motors RL with Two-Stage Worm Gears

230/400V, 50Hz, IP54, isolation class F, can also be connected to alternating current using an operating capacitor.

General data page 722.

Motor with roller bearing, gearbox with slide bearing.
Worms hardened and ground.
Worm gears made from special brass.

**Ordering details: Type, Voltage/Frequency, possibl. Operating Capacitor, Motor Data, Ratio, Product No.**

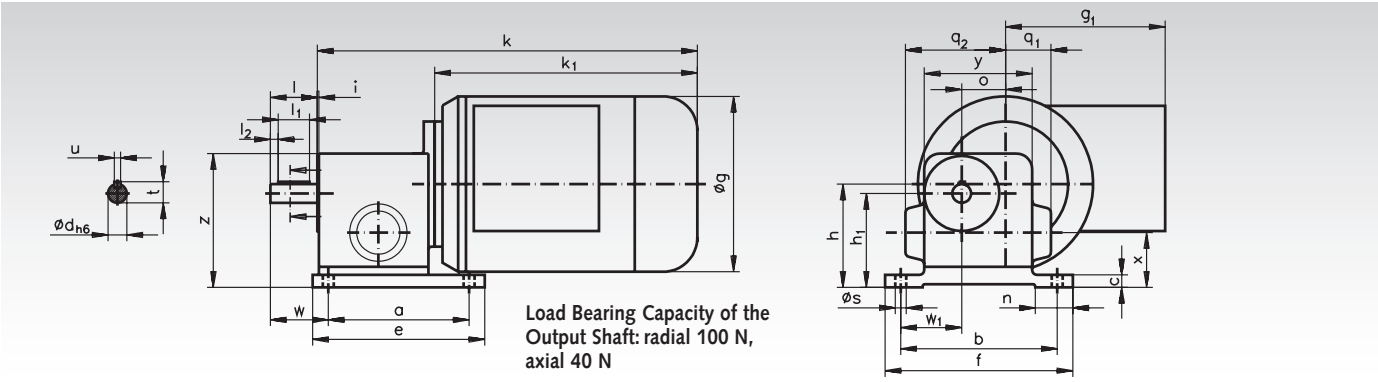


**Load Bearing Capacity of the Output Shaft: radial 100 N, axial 40 N**

| a mm | b mm | c mm | e mm | f mm | h mm | $h_1$ mm | n mm | Øs mm | w mm | $w_1$ mm | g mm | $g_1$ mm | k mm | $k_1$ mm | o mm | $q_1$ mm | $q_2$ mm | x mm | y mm | z mm | Ød mm | i mm | l mm | $l_1$ mm | $l_2$ mm | t mm | u mm |
|---|---|---|---|---|---|---|---|---|---|---|---|---|---|---|---|---|---|---|---|---|---|---|---|---|---|---|---|
| 90 | 100 | 8 | 110 | 120 | 66 | 60 | 24 | 6 | 37 | 40 | 112 | 102 | 243 | 168 | 28 | 30 | 64 | 35 | 70 | 85 | 12 | 1 | 30 | 20 | 5 | 13,5 | 4 |

**Dimensions without stated tolerances are non-binding!**

### Motor Data 90 Watt, 1400 min$^{-1}$, ca. 0.45 A at 400 Volt

| Product No. | Output-Speed min$^{-1}$ | Ratio i = | Permiss. Torque at the Output Shaft Nm | Weight kg | Product No. Operating Capacitor 10µF |
|---|---|---|---|---|---|
| **434 05 012** | 112 | 12,5 : 1 | 4,8 | 4,2 | **436 359 00** |
| **434 05 025** | 56 | 25 : 1 | 7,8* | 4,2 | **436 359 00** |
| **434 05 050** | 28 | 50 : 1 | 7,8* | 4,2 | **436 359 00** |
| **434 05 070** | 20 | 70 : 1 | 7,1* | 4,2 | **436 359 00** |
| **434 05 100** | 14 | 100 : 1 | 6,1* | 4,2 | **436 359 00** |
| **434 05 125** | 11 | 125 : 1 | 7,8* | 4,2 | **436 359 00** |
| **434 05 250** | 5,6 | 250 : 1 | 7,1* | 4,2 | **436 359 00** |
| **434 05 400** | 3,5 | 400 : 1 | 7,4* | 4,2 | **436 359 00** |
| **434 05 750** | 1,9 | 750 : 1 | 7,1* | 4,2 | **436 359 00** |
| **434 05 990** | 1,1 | 1250 : 1 | 6,1* | 4,2 | **436 359 00** |
| **434 05 992** | 0,9 | 1500 : 1 | 7,1* | 4,2 | **436 359 00** |

* Stability related max. torque.

### Motor Data 120 Watt, 2800 min$^{-1}$, ca. 0.5 A at 400 Volt

| Product No. | Output-Speed min$^{-1}$ | Ratio i = | Permiss. Torque at the Output Shaft Nm | Weight kg | Product No. Operating Capacitor 16µF |
|---|---|---|---|---|---|
| **434 06 012** | 224 | 12,5 : 1 | 3,4 | 4,2 | **436 361 00** |
| **434 06 025** | 112 | 25 : 1 | 6,6 | 4,2 | **436 361 00** |
| **434 06 050** | 56 | 50 : 1 | 7,8* | 4,2 | **436 361 00** |
| **434 06 070** | 40 | 70 : 1 | 7,1* | 4,2 | **436 361 00** |
| **434 06 100** | 28 | 100 : 1 | 6,1* | 4,2 | **436 361 00** |
| **434 06 125** | 22 | 125 : 1 | 7,8* | 4,2 | **436 361 00** |
| **434 06 250** | 11 | 250 : 1 | 7,1* | 4,2 | **436 361 00** |
| **434 06 400** | 7 | 400 : 1 | 7,4* | 4,2 | **436 361 00** |
| **434 06 750** | 3,7 | 750 : 1 | 7,1* | 4,2 | **436 361 00** |
| **434 06 990** | 2,2 | 1250 : 1 | 6,1* | 4,2 | **436 361 00** |
| **434 06 992** | 1,9 | 1500 : 1 | 7,1* | 4,2 | **436 361 00** |

* Stability related max. torque.

## Worm Geared Motors RM with Two-Stage Worm Gears

230/400V, 50Hz, IP54, isolation class F, can also be connected to alternating current using an operating capacitor.

General data page 722.

Motor and gearbox with roller bearing.
Worms hardened and ground.
Worm gears made from special brass.

**Ordering details: Type, Voltage/Frequency, possibly Operating Capacitor, Motor Data, Ratio, Product No.**

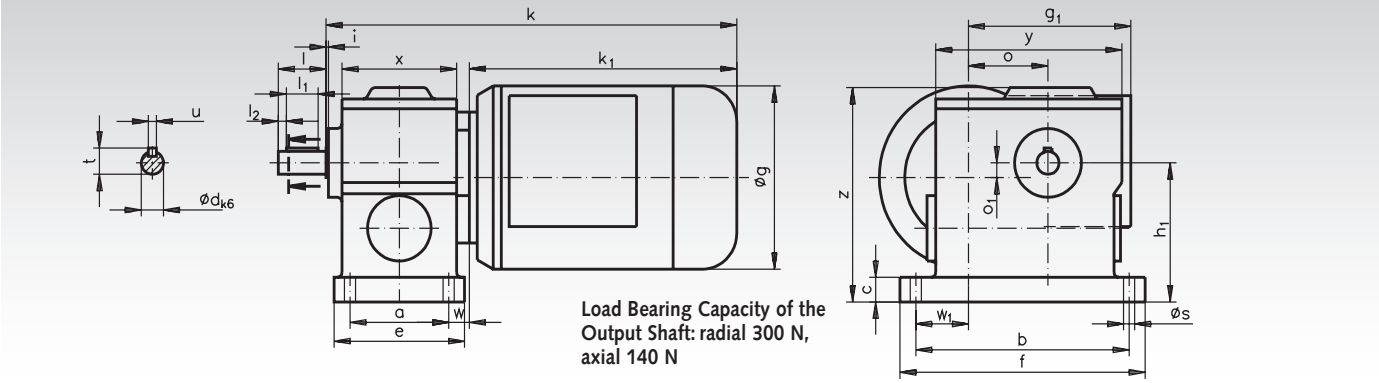


**Load Bearing Capacity of the Output Shaft: radial 300 N, axial 140 N**

| a mm | b mm | c mm | e mm | f mm | $h_1$ mm | Ø s mm | w mm | $w_1$ mm | g mm | $g_1$ mm | k mm | $k_1$ mm | o mm | $o_1$ mm | x mm | y mm | z mm | Ø d mm | i mm | l mm | $l_1$ mm | $l_2$ mm | t mm | u mm |
|---|---|---|---|---|---|---|---|---|---|---|---|---|---|---|---|---|---|---|---|---|---|---|---|---|
| 62 | 134 | 15 | 82 | 154 | 85 | 6,6 | 13 | 33 | 112 | 102 | 258 | 168 | 50 | 9 | 72 | 117 | 131 | 14 | 1,5 | 30 | 20 | 5 | 16 | 5 |

**Dimensions without stated tolerances are non-binding!**

### Motor Data 90 Watt, 1400 min$^{-1}$, ca. 0.45 A at 400 Volt

| Product No. | Output-Speed min$^{-1}$ | Ratio i = | Permiss. Torque at the Output Shaft Nm | Weight kg | Product No. Operating Capacitor 10µF |
|---|---|---|---|---|---|
| **434 08 050** | 28 | 50 : 1 | 18 | 5,7 | **436 359 00** |
| **434 08 100** | 14 | 100 : 1 | 32 | 5,7 | **436 359 00** |
| **434 08 200** | 7 | 200 : 1 | 35* | 5,7 | **436 359 00** |
| **434 08 300** | 4,7 | 300 : 1 | 36* | 5,7 | **436 359 00** |
| **434 08 380** | 3,7 | 380 : 1 | 35* | 5,7 | **436 359 00** |
| **434 08 500** | 2,8 | 500 : 1 | 35* | 5,7 | **436 359 00** |
| **434 08 750** | 1,9 | 750 : 1 | 36* | 5,7 | **436 359 00** |
| **434 08 988** | 1,2 | 1140 : 1 | 36* | 5,7 | **436 359 00** |
| **434 08 992** | 0,9 | 1500 : 1 | 36* | 5,7 | **436 359 00** |
| **434 08 996** | 0,6 | 2250 : 1 | 36* | 5,7 | **436 359 00** |

* Stability related max. torque.

### Motor Data 120 Watt, 2800 min$^{-1}$, ca. 0.5 A at 400 Volt

| Product No. | Output-Speed min$^{-1}$ | Ratio i = | Permiss. Torque at the Output Shaft Nm | Weight kg | Product No. Operating Capacitor 16µF |
|---|---|---|---|---|---|
| **434 09 050** | 56 | 50 : 1 | 13 | 5,7 | **436 361 00** |
| **434 09 100** | 28 | 100 : 1 | 23 | 5,7 | **436 361 00** |
| **434 09 200** | 14 | 200 : 1 | 35* | 5,7 | **436 361 00** |
| **434 09 300** | 9,3 | 300 : 1 | 36* | 5,7 | **436 361 00** |
| **434 09 380** | 7,4 | 380 : 1 | 35* | 5,7 | **436 361 00** |
| **434 09 500** | 5,6 | 500 : 1 | 35* | 5,7 | **436 361 00** |
| **434 09 750** | 3,7 | 750 : 1 | 36* | 5,7 | **436 361 00** |
| **434 09 988** | 2,5 | 1140 : 1 | 36* | 5,7 | **436 361 00** |
| **434 09 992** | 1,9 | 1500 : 1 | 36* | 5,7 | **436 361 00** |
| **434 09 996** | 1,2 | 2250 : 1 | 36* | 5,7 | **436 361 00** |

* Stability related max. torque.

## Worm Geared Motors RS with Two-Stage Worm Gears

230/400V, 50Hz, I54, isolation class F, can also be connected to alternating current using an operating capacitor.

General data page 722.

Motor and gearbox with roller bearing.
Worms hardened and ground.
Worm gears made from special brass.

**Ordering details: Type, Voltage/Frequency, possibl. Operating Capacitor, Motor Data, Ratio, Product No.**

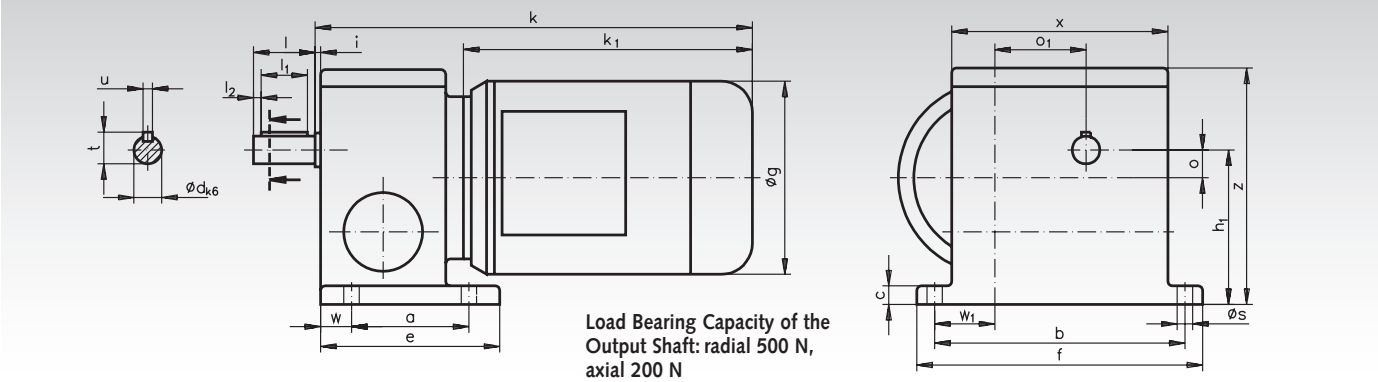


**Load Bearing Capacity of the Output Shaft: radial 500 N, axial 200 N**

| a mm | b mm | c mm | e mm | f mm | $h_1$ mm | Øs mm | w mm | $w_1$ mm | g mm | k mm | $k_1$ mm | o mm | $o_1$ mm | x mm | z mm | Ød mm | i mm | l mm | $l_1$ mm | $l_2$ mm | t mm | u mm |
|---|---|---|---|---|---|---|---|---|---|---|---|---|---|---|---|---|---|---|---|---|---|---|
| 76 | 162 | 12 | 116 | 185 | 100 | 10 | 20 | 39 | 125 | 283 | 187 | 18 | 59 | 140 | 153 | 18 | 3,5 | 40 | 30 | 5 | 20,5 | 6 |

**Dimensions without stated tolerances are non-binding!**

### Motor Data 180 Watt, 1400 min$^{-1}$, ca. 0.75 A at 400 Volt

| Product No. | Output-Speed min$^{-1}$ | Ratio i = | Permiss. Torque at the Output Shaft Nm | Weight kg | Product No. Operating Capacitor 20µF |
|---|---|---|---|---|---|
| **434 12 070** | 20 | 70 : 1 | 46 | 9,5 | **436 362 00** |
| **434 12 105** | 13 | 105 : 1 | 58 | 9,5 | **436 362 00** |
| **434 12 150** | 9,3 | 150 : 1 | 73 | 9,5 | **436 362 00** |
| **434 12 225** | 6,2 | 225 : 1 | 90* | 9,5 | **436 362 00** |
| **434 12 276** | 5,1 | 276 : 1 | 81* | 9,5 | **436 362 00** |
| **434 12 360** | 3,9 | 360 : 1 | 93* | 9,5 | **436 362 00** |
| **434 12 450** | 3,1 | 450 : 1 | 93* | 9,5 | **436 362 00** |
| **434 12 570** | 2,5 | 570 : 1 | 81* | 9,5 | **436 362 00** |
| **434 12 750** | 1,9 | 750 : 1 | 93* | 9,5 | **436 362 00** |
| **434 12 986** | 1,3 | 1050 : 1 | 113* | 9,5 | **436 362 00** |
| **434 12 994** | 0,9 | 1520 : 1 | 81* | 9,5 | **436 362 00** |
| **434 12 998** | 0,6 | 2500 : 1 | 72* | 9,5 | **436 362 00** |

* Stability related max. torque.

### Motor Data 250 Watt, 2800 min$^{-1}$, ca. 0.75 A at 400 Volt

| Product No. | Output-Speed min$^{-1}$ | Ratio i = | Permiss. Torque at the Output Shaft Nm | Weight kg | Product No. Operating Capacitor 25µF |
|---|---|---|---|---|---|
| **434 13 070** | 40 | 70 : 1 | 34 | 9,6 | **436 363 00** |
| **434 13 105** | 27 | 105 : 1 | 45 | 9,6 | **436 363 00** |
| **434 13 150** | 19 | 150 : 1 | 57 | 9,6 | **436 363 00** |
| **434 13 225** | 12 | 225 : 1 | 83 | 9,6 | **436 363 00** |
| **434 13 276** | 10 | 276 : 1 | 81* | 9,6 | **436 363 00** |
| **434 13 360** | 7,8 | 360 : 1 | 93* | 9,6 | **436 363 00** |
| **434 13 450** | 6,2 | 450 : 1 | 93* | 9,6 | **436 363 00** |
| **434 13 570** | 4,9 | 570 : 1 | 81* | 9,6 | **436 363 00** |
| **434 13 750** | 3,7 | 750 : 1 | 93* | 9,6 | **436 363 00** |
| **434 13 986** | 2,7 | 1050 : 1 | 113* | 9,6 | **436 363 00** |
| **434 13 994** | 1,8 | 1520 : 1 | 81* | 9,6 | **436 363 00** |
| **434 13 998** | 1,1 | 2500 : 1 | 72* | 9,6 | **436 363 00** |

* Stability related max. torque.

**Housing:** Aluminium, corrosion-inhibited coating, with mounting holes for flexible foot and flange mounting.
**Worm shaft:** Hardened and ground.
**Worm gear:** Bronze on grey cast iron hub.
**Lubrication:** Synthetic oil (lubricated for life).
**Motor:** Standard three-phase motor with small flange B14, 230/400V, 50Hz. **From 0.75 kW in efficiency class IE2.**
Other motor versions (AC motor, posistor, forced ventilation, brake etc.) on request.

Light-weight, high-quality model range with many mounting options. These maintenance-free, geared motors without ventilation can be used in **any mounting position**. The mounting positions V5 and V6 (worm shaft vertical) are however not recommended for continuous operation.

**Output shaft push-in type**: The basic gearbox version has a hollow shaft. They can, however, also be supplied with a push-in type output shaft (single sided, to be used left and right, or double sided). These output shafts have their own product number and have to be ordered separately.

**Variable mounting:** The geared motors are supplied without foot mounting. The foot mounting, which has to be ordered separately, can however easily be screwed on, if a foot mounting is required. The position of the foot can be changed for different mounting positions.

**Retrofittable flange:** If an output-side flange mounting is required, this flange can easily be mounted by the customer. These flanges have their own product number and have to be ordered separately.

**Ordering details: e.g.: Prod. No., Type, Motor power, Output Speed**
**If required: Output shaft single sided (or double sided), Prod. No., Gearbox Size**
**Foot Mounting, Gearbox Size, Prod. No.**
**Output Flange, Gearbox Size, Prod. No.**
**Torque Arm, Gearbox Size, Prod. No.**

P = Power
$n_2$ = Output Speed
$T_2$ = Output torque
$f_B$ = Operating factor
$i_{ist}$ = Ratio

| Product No. Standard Version | P kW | $n_2$ $min^{-1}$ | $T_2$ Nm | $f_B$ | $i_{ist}$ | Gearbox Size | Motor Size | Accessories (order separately)* Product No. Single-Sided Output Shaft | Product No. Double-Sided Output Shaft | Product No. Foot Mounting | Product No. Output Flange |
|---|---|---|---|---|---|---|---|---|---|---|---|
| 438 009 05 | 0,09 | 9 | 44 | 1,2 | 100 | 050 | 63A6 | 438 051 00 | 438 052 00 | 438 053 00 | 438 054 00 |
| 438 009 10 | 0,09 | 12,9 | 34 | 1,1 | 70 | 045 | 63A6 | 438 041 00 | 438 042 00 | 438 043 00 | 438 044 00 |
| 438 009 15 | 0,09 | 15 | 30 | 1,5 | 60 | 045 | 63A6 | 438 041 00 | 438 042 00 | 438 043 00 | 438 044 00 |
| 438 009 20 | 0,09 | 19,6 | 24 | 1,9 | 46 | 045 | 63A6 | 438 041 00 | 438 042 00 | 438 043 00 | 438 044 00 |
| 438 009 25 | 0,09 | 23 | 19 | 1 | 61 | 030 | 56B4 | 438 031 00 | 438 032 00 | 438 033 00 | 438 034 00 |
| 438 009 30 | 0,09 | 35 | 14 | 1,4 | 40 | 030 | 56B4 | 438 031 00 | 438 032 00 | 438 033 00 | 438 034 00 |
| 438 009 35 | 0,09 | 46,7 | 11 | 1,8 | 30 | 030 | 56B4 | 438 031 00 | 438 032 00 | 438 033 00 | 438 034 00 |
| 438 009 40 | 0,09 | 70 | 8 | 2,2 | 20 | 030 | 56B4 | 438 031 00 | 438 032 00 | 438 033 00 | 438 034 00 |
| 438 009 45 | 0,09 | 93 | 7 | 2,7 | 15 | 030 | 56B4 | 438 031 00 | 438 032 00 | 438 033 00 | 438 034 00 |
| 438 009 50 | 0,09 | 140 | 5 | 3,2 | 10 | 030 | 56B4 | 438 031 00 | 438 032 00 | 438 033 00 | 438 034 00 |
| 438 009 55 | 0,09 | 200 | 3 | 4,7 | 7 | 030 | 56B4 | 438 031 00 | 438 032 00 | 438 033 00 | 438 034 00 |
| 438 012 05 | 0,12 | 12,9 | 49 | 0,8 | 70 | 045 | 63B6 | 438 041 00 | 438 042 00 | 438 043 00 | 438 044 00 |
| 438 012 10 | 0,12 | 17,5 | 38 | 1,4 | 80 | 050 | 63A4 | 438 051 00 | 438 052 00 | 438 053 00 | 438 054 00 |
| 438 012 15 | 0,12 | 20,6 | 34 | 1,6 | 68 | 050 | 63A4 | 438 051 00 | 438 052 00 | 438 053 00 | 438 054 00 |
| 438 012 20 | 0,12 | 30,4 | 24 | 1,6 | 46 | 045 | 63A4 | 438 041 00 | 438 042 00 | 438 043 00 | 438 044 00 |
| 438 012 25 | 0,12 | 35 | 20 | 1 | 40 | 030 | 63A4 | 438 031 00 | 438 032 00 | 438 033 00 | 438 034 00 |
| 438 012 30 | 0,12 | 46,7 | 16 | 1,2 | 30 | 030 | 63A4 | 438 031 00 | 438 032 00 | 438 033 00 | 438 034 00 |
| 438 012 35 | 0,12 | 50 | 16 | 2,4 | 28 | 045 | 63A4 | 438 041 00 | 438 042 00 | 438 043 00 | 438 044 00 |
| 438 012 40 | 0,12 | 70 | 12 | 1,5 | 20 | 030 | 63A4 | 438 031 00 | 438 032 00 | 438 033 00 | 438 034 00 |
| 438 012 45 | 0,12 | 93 | 10 | 1,9 | 15 | 030 | 63A4 | 438 031 00 | 438 032 00 | 438 033 00 | 438 034 00 |
| 438 012 50 | 0,12 | 140 | 7 | 2,2 | 10 | 030 | 63A4 | 438 031 00 | 438 032 00 | 438 033 00 | 438 034 00 |
| 438 012 55 | 0,12 | 200 | 5 | 1,5 | 7 | 030 | 63A4 | 438 031 00 | 438 032 00 | 438 033 00 | 438 034 00 |
| 438 018 05 | 0,18 | 9,6 | 86 | 1,4 | 94 | 063 | 71A6 | 438 061 00 | 438 062 00 | 438 063 00 | 438 064 00 |
| 438 018 10 | 0,18 | 14 | 61 | 0,8 | 100 | 050 | 63B4 | 438 051 00 | 438 052 00 | 438 053 00 | 438 054 00 |
| 438 018 15 | 0,18 | 17,5 | 53 | 1 | 80 | 050 | 63B4 | 438 051 00 | 438 052 00 | 438 053 00 | 438 054 00 |
| 438 018 20 | 0,18 | 20,6 | 48 | 1,2 | 68 | 050 | 63B4 | 438 051 00 | 438 052 00 | 438 053 00 | 438 054 00 |
| 438 018 25 | 0,18 | 30,4 | 33 | 1,2 | 46 | 045 | 63B4 | 438 041 00 | 438 042 00 | 438 043 00 | 438 044 00 |
| 438 018 30 | 0,18 | 37,8 | 29 | 1,4 | 37 | 045 | 63B4 | 438 041 00 | 438 042 00 | 438 043 00 | 438 044 00 |
| 438 018 35 | 0,18 | 50 | 22 | 1,7 | 28 | 045 | 63B4 | 438 041 00 | 438 042 00 | 438 043 00 | 438 044 00 |
| 438 018 40 | 0,18 | 70 | 16 | 1,1 | 20 | 030 | 63B4 | 438 031 00 | 438 032 00 | 438 033 00 | 438 034 00 |
| 438 018 45 | 0,18 | 100 | 13 | 2,2 | 14 | 045 | 63B4 | 438 041 00 | 438 042 00 | 438 043 00 | 438 044 00 |
| 438 018 50 | 0,18 | 140 | 10 | 1,6 | 10 | 030 | 63B4 | 438 031 00 | 438 032 00 | 438 033 00 | 438 034 00 |
| 438 018 55 | 0,18 | 200 | 7 | 2,3 | 7 | 030 | 63B4 | 438 031 00 | 438 032 00 | 438 033 00 | 438 034 00 |

*More details and further accessories see page 736.

**Note for dimensioning and dimensions table see page 738.**

| Product No. Standard Version | P kW | $n_2$ $min^{-1}$ | $T_2$ Nm | $f_B$ | $i_{ist}$ | Gearbox Size | Motor Size | Accessories (order separately)* Product No. Single-Sided Output Shaft | Product No. Double-Sided Output Shaft | Product No. Foot Mounting | Product No. Output Flange |
|---|---|---|---|---|---|---|---|---|---|---|---|
| 438 025 05 | 0,25 | 9,6 | 120 | 1 | 94 | 063 | 71B6 | 438 061 00 | 438 062 00 | 438 063 00 | 438 064 00 |
| 438 025 10 | 0,25 | 13,4 | 100 | 1,3 | 67 | 063 | 71B6 | 438 061 00 | 438 062 00 | 438 063 00 | 438 064 00 |
| 438 025 15 | 0,25 | 17,5 | 78 | 1,5 | 80 | 063 | 71A4 | 438 061 00 | 438 062 00 | 438 063 00 | 438 064 00 |
| 438 025 20 | 0,25 | 20,9 | 69 | 1,7 | 67 | 063 | 71A4 | 438 061 00 | 438 062 00 | 438 063 00 | 438 064 00 |
| 438 025 25 | 0,25 | 25 | 62 | 2,6 | 36 | 063 | 71B6 | 438 061 00 | 438 062 00 | 438 063 00 | 438 064 00 |
| 438 025 30 | 0,25 | 32,6 | 48 | 1,3 | 43 | 050 | 71A4 | 438 051 00 | 438 052 00 | 438 053 00 | 438 054 00 |
| 438 025 35 | 0,25 | 38,9 | 42 | 1,6 | 36 | 050 | 71A4 | 438 051 00 | 438 052 00 | 438 053 00 | 438 054 00 |
| 438 025 40 | 0,25 | 50 | 31 | 1,3 | 28 | 045 | 71A4 | 438 041 00 | 438 042 00 | 438 043 00 | 438 044 00 |
| 438 025 45 | 0,25 | 67 | 24 | 1,6 | 21 | 045 | 71A4 | 438 041 00 | 438 042 00 | 438 043 00 | 438 044 00 |
| 438 025 50 | 0,25 | 100 | 18 | 1,6 | 14 | 045 | 71A4 | 438 041 00 | 438 042 00 | 438 043 00 | 438 044 00 |
| 438 025 55 | 0,25 | 140 | 13 | 2,2 | 10 | 045 | 71A4 | 438 041 00 | 438 042 00 | 438 043 00 | 438 044 00 |
| 438 025 60 | 0,25 | 200 | 10 | 3 | 7 | 045 | 71A4 | 438 041 00 | 438 042 00 | 438 043 00 | 438 044 00 |
| 438 037 05 | 0,37 | 14,9 | 123 | 0,8 | 94 | 063 | 71B4 | 438 061 00 | 438 062 00 | 438 063 00 | 438 064 00 |
| 438 037 10 | 0,37 | 17,5 | 115 | 1 | 80 | 063 | 71B4 | 438 061 00 | 438 062 00 | 438 063 00 | 438 064 00 |
| 438 037 15 | 0,37 | 20,9 | 101 | 1,2 | 67 | 063 | 71B4 | 438 061 00 | 438 062 00 | 438 063 00 | 438 064 00 |
| 438 037 20 | 0,37 | 31,1 | 75 | 1,7 | 45 | 063 | 71B4 | 438 061 00 | 438 062 00 | 438 063 00 | 438 064 00 |
| 438 037 25 | 0,37 | 38,9 | 62 | 2,3 | 36 | 063 | 71B4 | 438 061 00 | 438 062 00 | 438 063 00 | 438 064 00 |
| 438 037 30 | 0,37 | 46,7 | 56 | 2,5 | 30 | 063 | 71B4 | 438 061 00 | 438 062 00 | 438 063 00 | 438 064 00 |
| 438 037 35 | 0,37 | 54 | 45 | 1,4 | 26 | 050 | 71B4 | 438 051 00 | 438 052 00 | 438 053 00 | 438 054 00 |
| 438 037 40 | 0,37 | 67 | 36 | 1,1 | 21 | 045 | 71B4 | 438 041 00 | 438 042 00 | 438 043 00 | 438 044 00 |
| 438 037 45 | 0,37 | 78 | 34 | 1,7 | 18 | 050 | 71B4 | 438 051 00 | 438 052 00 | 438 053 00 | 438 054 00 |
| 438 037 50 | 0,37 | 100 | 27 | 1,1 | 14 | 045 | 71B4 | 438 041 00 | 438 042 00 | 438 043 00 | 438 044 00 |
| 438 037 55 | 0,37 | 140 | 20 | 1,5 | 10 | 045 | 71B4 | 438 041 00 | 438 042 00 | 438 043 00 | 438 044 00 |
| 438 037 60 | 0,37 | 200 | 14 | 2,1 | 7 | 045 | 71B4 | 438 041 00 | 438 042 00 | 438 043 00 | 438 044 00 |
| 438 055 05 | 0,55 | 9,4 | 280 | 0,9 | 96 | 085 | 80B6 | 438 081 00 | 438 082 00 | 438 083 00 | 438 084 00 |
| 438 055 10 | 0,55 | 13,4 | 239 | 1,2 | 67 | 085 | 80B6 | 438 081 00 | 438 082 00 | 438 083 00 | 438 084 00 |
| 438 055 15 | 0,55 | 18,9 | 161 | 1,6 | 74 | 085 | 80A4 | 438 081 00 | 438 082 00 | 438 083 00 | 438 084 00 |
| 438 055 20 | 0,55 | 20,9 | 163 | 1,7 | 67 | 085 | 80A4 | 438 081 00 | 438 082 00 | 438 083 00 | 438 084 00 |
| 438 055 25 | 0,55 | 26,9 | 129 | 2,1 | 52 | 085 | 80A4 | 438 081 00 | 438 082 00 | 438 083 00 | 438 084 00 |
| 438 055 30 | 0,55 | 31,1 | 111 | 1,2 | 45 | 063 | 80A4 | 438 061 00 | 438 062 00 | 438 063 00 | 438 064 00 |
| 438 055 35 | 0,55 | 38,9 | 92 | 1,5 | 36 | 063 | 80A4 | 438 061 00 | 438 062 00 | 438 063 00 | 438 064 00 |
| 438 055 40 | 0,55 | 46,7 | 83 | 1,7 | 30 | 063 | 80A4 | 438 061 00 | 438 062 00 | 438 063 00 | 438 064 00 |
| 438 055 45 | 0,55 | 58 | 68 | 2 | 24 | 063 | 80A4 | 438 061 00 | 438 062 00 | 438 063 00 | 438 064 00 |
| 438 055 50 | 0,55 | 74 | 56 | 2,4 | 19 | 063 | 80A4 | 438 061 00 | 438 062 00 | 438 063 00 | 438 064 00 |
| 438 055 55 | 0,55 | 93 | 44 | 2,9 | 15 | 063 | 80A4 | 438 061 00 | 438 062 00 | 438 063 00 | 438 064 00 |
| 438 055 60 | 0,55 | 140 | 30 | 2 | 10 | 050 | 80A4 | 438 051 00 | 438 052 00 | 438 053 00 | 438 054 00 |
| 438 075 05 | 0,75 | 14,6 | 260 | 0,9 | 96 | 085 | 80B4 | 438 081 00 | 438 082 00 | 438 083 00 | 438 084 00 |
| 438 075 10 | 0,75 | 18,9 | 220 | 1,2 | 74 | 085 | 80B4 | 438 081 00 | 438 082 00 | 438 083 00 | 438 084 00 |
| 438 075 15 | 0,75 | 20,9 | 223 | 1,2 | 67 | 085 | 80B4 | 438 081 00 | 438 082 00 | 438 083 00 | 438 084 00 |
| 438 075 20 | 0,75 | 26,9 | 176 | 1,6 | 52 | 085 | 80B4 | 438 081 00 | 438 082 00 | 438 083 00 | 438 084 00 |
| 438 075 25 | 0,75 | 30,4 | 160 | 1,9 | 46 | 085 | 80B4 | 438 081 00 | 438 082 00 | 438 083 00 | 438 084 00 |
| 438 075 30 | 0,75 | 36,8 | 138 | 2,3 | 38 | 085 | 80B4 | 438 081 00 | 438 082 00 | 438 083 00 | 438 084 00 |
| 438 075 35 | 0,75 | 46,7 | 114 | 1,2 | 30 | 063 | 80B4 | 438 061 00 | 438 062 00 | 438 063 00 | 438 064 00 |
| 438 075 40 | 0,75 | 58 | 92 | 1,5 | 24 | 063 | 80B4 | 438 061 00 | 438 062 00 | 438 063 00 | 438 064 00 |
| 438 075 45 | 0,75 | 74 | 76 | 1,7 | 19 | 063 | 80B4 | 438 061 00 | 438 062 00 | 438 063 00 | 438 064 00 |
| 438 075 50 | 0,75 | 93 | 61 | 2,2 | 15 | 063 | 80B4 | 438 061 00 | 438 062 00 | 438 063 00 | 438 064 00 |
| 438 075 55 | 0,75 | 100 | 57 | 1,1 | 14 | 050 | 80B4 | 438 051 00 | 438 052 00 | 438 053 00 | 438 054 00 |
| 438 075 60 | 0,75 | 140 | 41 | 1,4 | 10 | 050 | 80B4 | 438 051 00 | 438 052 00 | 438 053 00 | 438 054 00 |
| 438 110 05 | 1,1 | 18,9 | 322 | 0,8 | 74 | 085 | 90S4 | 438 081 00 | 438 082 00 | 438 083 00 | 438 084 00 |
| 438 110 10 | 1,1 | 20,9 | 327 | 0,8 | 67 | 085 | 90S4 | 438 081 00 | 438 082 00 | 438 083 00 | 438 084 00 |
| 438 110 15 | 1,1 | 26,9 | 258 | 1,1 | 52 | 085 | 90S4 | 438 081 00 | 438 082 00 | 438 083 00 | 438 084 00 |
| 438 110 20 | 1,1 | 30,4 | 235 | 1,3 | 46 | 085 | 90S4 | 438 081 00 | 438 082 00 | 438 083 00 | 438 084 00 |
| 438 110 25 | 1,1 | 36,8 | 202 | 1,6 | 38 | 085 | 90S4 | 438 081 00 | 438 082 00 | 438 083 00 | 438 084 00 |
| 438 110 30 | 1,1 | 38,9 | 184 | 0,8 | 36 | 063 | 90S4 | 438 061 00 | 438 062 00 | 438 063 00 | 438 064 00 |
| 438 110 35 | 1,1 | 46,7 | 167 | 0,8 | 30 | 063 | 90S4 | 438 061 00 | 438 062 00 | 438 063 00 | 438 064 00 |
| 438 110 40 | 1,1 | 50 | 158 | 2,1 | 28 | 085 | 90S4 | 438 081 00 | 438 082 00 | 438 083 00 | 438 084 00 |
| 438 110 45 | 1,1 | 58 | 135 | 1 | 24 | 063 | 90S4 | 438 061 00 | 438 062 00 | 438 063 00 | 438 064 00 |
| 438 110 50 | 1,1 | 64 | 129 | 2,2 | 22 | 085 | 90S4 | 438 081 00 | 438 082 00 | 438 083 00 | 438 084 00 |
| 438 110 55 | 1,1 | 74 | 111 | 1,2 | 19 | 063 | 90S4 | 438 061 00 | 438 062 00 | 438 063 00 | 438 064 00 |
| 438 110 60 | 1,1 | 93 | 89 | 1,5 | 15 | 063 | 90S4 | 438 061 00 | 438 062 00 | 438 063 00 | 438 064 00 |
| 438 110 65 | 1,1 | 100 | 82 | 3,5 | 14 | 085 | 90S4 | 438 081 00 | 438 082 00 | 438 083 00 | 438 084 00 |
| 438 110 70 | 1,1 | 140 | 61 | 2,1 | 10 | 063 | 90S4 | 438 061 00 | 438 062 00 | 438 063 00 | 438 064 00 |
| 438 115 05 | 1,5 | 26,9 | 351 | 0,8 | 52 | 085 | 90LA4 | 438 081 00 | 438 082 00 | 438 083 00 | 438 084 00 |
| 438 115 10 | 1,5 | 30,4 | 320 | 1 | 46 | 085 | 90LA4 | 438 081 00 | 438 082 00 | 438 083 00 | 438 084 00 |
| 438 115 15 | 1,5 | 36,8 | 276 | 1,2 | 38 | 085 | 90LA4 | 438 081 00 | 438 082 00 | 438 083 00 | 438 084 00 |
| 438 115 20 | 1,5 | 50 | 215 | 1,5 | 28 | 085 | 90LA4 | 438 081 00 | 438 082 00 | 438 083 00 | 438 084 00 |
| 438 115 25 | 1,5 | 64 | 176 | 1,6 | 22 | 085 | 90LA4 | 438 081 00 | 438 082 00 | 438 083 00 | 438 084 00 |
| 438 115 30 | 1,5 | 70 | 162 | 1,7 | 20 | 085 | 90LA4 | 438 081 00 | 438 082 00 | 438 083 00 | 438 084 00 |
| 438 115 35 | 1,5 | 74 | 152 | 0,9 | 19 | 063 | 90LA4 | 438 061 00 | 438 062 00 | 438 063 00 | 438 064 00 |
| 438 115 40 | 1,5 | 93 | 121 | 1,1 | 15 | 063 | 90LA4 | 438 061 00 | 438 062 00 | 438 063 00 | 438 064 00 |
| 438 115 45 | 1,5 | 100 | 112 | 2,6 | 14 | 085 | 90LA4 | 438 081 00 | 438 082 00 | 438 083 00 | 438 084 00 |
| 438 115 50 | 1,5 | 140 | 83 | 1,5 | 10 | 063 | 90LA4 | 438 061 00 | 438 062 00 | 438 063 00 | 438 064 00 |

Note for dimensioning and dimensions table see page 738.

## Push-In Output Shafts HMD, Single Sided

**Material:** Steel.

To change the gearboxes HMD/I over from hollow shaft to solid shaft. The shaft is only pushed in and secured with the enclosed cover disc and mounting screw.

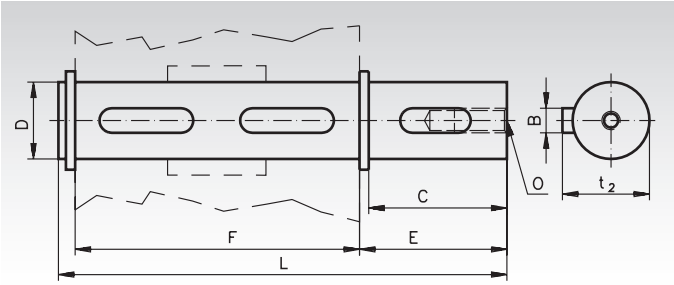


**Ordering details: e.g.: Prod. No. 438 031 00, Push-In Output Shaft, Single Sided, Gearbox Size 030**

| Product No. | Gearbox Size | B mm | C mm | D mm | E mm | F mm | L mm | O mm | $t_2$ mm | Weight kg |
|---|---|---|---|---|---|---|---|---|---|---|
| **438 031 00** | 030 | 5 | 25 | 14 | 35,5 | 55 | 94,5 | M5x14 | 15,8 | 0,12 |
| **438 041 00** | 045 | 6 | 32 | 18 | 43,0 | 65 | 113,0 | M6x18 | 20,5 | 0,23 |
| **438 051 00** | 050 | 8 | 52 | 25 | 59,5 | 81 | 146,0 | M8x20 | 28 | 0,57 |
| **438 061 00** | 063 | 8 | 60 | 25 | 63,2 | 120 | 190,0 | M8x20 | 28 | 0,73 |
| **438 081 00** | 085 | 10 | 60 | 35 | 73,5 | 135 | 214,5 | M10x23 | 38 | 1,52 |

## Push-In Output Shafts HMD, Double Sided

**Material:** Steel.

To change the gearboxes HMD/I over from hollow shaft to solid shaft. The shaft is only pushed in and secured with the enclosed cover disc and mounting screw.

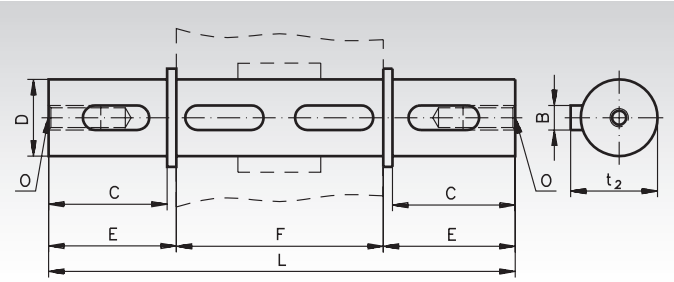


**Ordering details: e.g.: Prod. No. 438 032 00, Push-In Output Shaft, Double Sided, Gearbox Size 030**

| Product No. | Gearbox Size | B mm | C mm | D mm | E mm | F mm | L mm | O mm | $t_2$ mm | Weight kg |
|---|---|---|---|---|---|---|---|---|---|---|
| **438 032 00** | 030 | 5 | 25 | 14 | 35,5 | 55 | 126,0 | M5x14 | 15,8 | 0,16 |
| **438 042 00** | 045 | 6 | 32 | 18 | 43,0 | 65 | 151,0 | M6x18 | 20,5 | 0,33 |
| **438 052 00** | 050 | 8 | 52 | 25 | 59,5 | 81 | 200,0 | M8x20 | 28 | 0,77 |
| **438 062 00** | 063 | 8 | 60 | 25 | 63,2 | 120 | 246,4 | M8x20 | 28 | 0,93 |
| **438 082 00** | 085 | 10 | 60 | 35 | 73,5 | 135 | 282,0 | M10x23 | 38 | 1,73 |

## Foot Mountings HMD/I

**Material:** Steel sheet, zinc plated.

Retrofit kit: Foot mounting.
The position of the feet can be changed by 4x90 (Size 063: 8x 45°). 8 mounting screws are included in the delivery (4 screws per side).

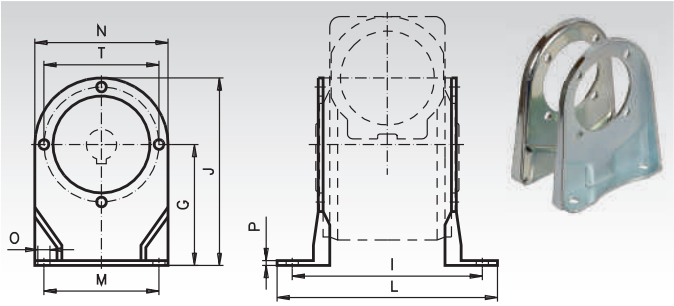


**Ordering details: e.g.: Prod. No. 438 033 00, Foot Mounting, Gearbox Size 030**

| Product No. | Gearbox Size | G mm | I mm | J mm | L mm | M mm | N mm | O mm | P mm | T mm | Screws Size | Weight kg |
|---|---|---|---|---|---|---|---|---|---|---|---|---|
| **438 033 00** | 030 | 55 | 66 | 94 | 87 | 50 | 78 | 6,5 | 3 | 65 | M6 | 0,27 |
| **438 043 00** | 045 | 72 | 81 | 121 | 100 | 52 | 98 | 10,5 | 3 | 65 | M6 | 0,49 |
| **438 053 00** | 050 | 82 | 98,5 | 138,5 | 123 | 63 | 113 | 10,5 | 3,5 | 94 | M6 | 0,82 |
| **438 063 00** | 063 | 100 | 111 | 170 | 144 | 95 | 133 | 10,5 | 4 | 90 | M8 | 1,23 |
| **438 083 00** | 085 | 142 | 145 | 236,5 | 182 | 140 | 180 | 10,5 | 5 | 130 | M10 | 2,70 |

## Accessories Worm Geared Motors HMD/I

### Output-Side Flanges HMD/I

**Material:** Aluminium.

Retrofit kit: Flange B5 with mounting screws.

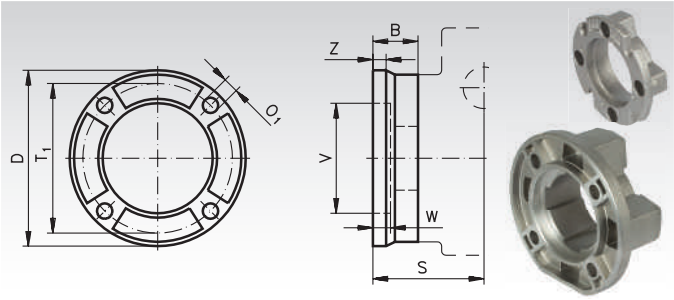


**Ordering details: e.g.: Prod. No. 438 034 00, Output-Side Flange, Ø 80 mm**

| Product No. | Gearbox Size | D mm | B mm | $O_1$ mm | S mm | $T_1$ mm | V mm | W mm | Z mm | Screws Amount x Size | Weight kg |
|---|---|---|---|---|---|---|---|---|---|---|---|
| **438 034 00** | 030 | 80 | 20,5 | 7,0 | 50,5 | 68 | 50 | 6 | 6 | 4 x M6 | 0,11 |
| **438 044 00** | 045 | 110 | 25,5 | 8,5 | 60,5 | 87 | 60 | 9 | 9 | 4 x M6 | 0,20 |
| **438 054 00** | 050 | 123 | 47 | 10,5 | 85,0 | 90 | 70 | 9 | 12 | 4 x M6 | 0,40 |
| **438 064 00** | 063 | 175 | 41 | 11 | 86,0 | 150 | 115 | 7 | 13 | 4 x M8 | 0,60 |
| **438 084 00** | 085 | 205 | 40 | 13,0 | 108,0 | 176 | 152 | 5 | 16 | 4 x M10 | 0,88 |

### Torque Arms HMD/I

**Material:** Steel sheet, zinc plated.

Retrofit kit: Torque arm with mounting screws.
The position can be changed by 4x90° (Size 063: 8x45°).

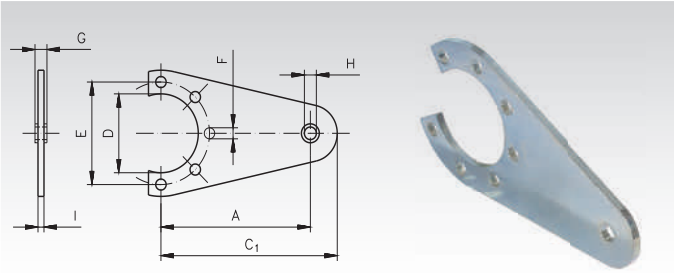


**Ordering details: e.g.: Prod. No. 438 035 00, Torque Arm, Gearbox Size 030**

| Product No. | Gearbox Size | A mm | $C_1$ mm | D mm | E mm | F mm | G mm | H mm | I mm | Screws Amount x Size | Weight kg |
|---|---|---|---|---|---|---|---|---|---|---|---|
| **438 035 00** | 030 | 100 | 118 | 50 | 65 | 7 | 4 | 8,2 | 4 | 4 x M6 | 0,21 |
| **438 045 00** | 045 | 100 | 113 | 50 | 65 | 7 | 4 | 8,2 | 4 | 4 x M6 | 0,21 |
| **438 055 00** | 050 | 100 | 118 | 68 | 94 | 7 | 4 | 8,2 | 4 | 4 x M6 | 0,26 |
| **438 065 00** | 063 | 150 | 180 | 75 | 90 | 9 | 20 | 11 | 6 | 4 x M8 | 0,70 |
| **438 085 00** | 085 | 200 | 240 | 110 | 130 | 11 | 25 | 21 | 6 | 4 x M10 | 1,44 |

### Permissible Radial and Axial Loads

The values are calculated for the middle of the input shaft end also calculating in the output speed $n_2$ in $min^{-1}$. $F_R$ is the max. permissible radial load for $F_A = 0$. $F_A$ is the max. permiss. axial load for $F_R = 0$.

| Gearbox Size | 200 $min^{-1}$ | | 150 $min^{-1}$ | | 100 $min^{-1}$ | | 75 $min^{-1}$ | | 50 $min^{-1}$ | | 25 $min^{-1}$ | | 15 $min^{-1}$ | |
|---|---|---|---|---|---|---|---|---|---|---|---|---|---|---|
| | $F_R$ N | $F_A$ N | $F_R$ N | $F_A$ N | $F_R$ N | $F_A$ N | $F_R$ N | $F_A$ N | $F_R$ N | $F_A$ N | $F_R$ N | $F_A$ N | $F_R$ N | $F_A$ N |
| **030** | 600 | 120 | 700 | 140 | 800 | 160 | 900 | 180 | 1000 | 200 | 1250 | 250 | 1400 | 280 |
| **045** | 900 | 180 | 1000 | 200 | 1100 | 220 | 1200 | 240 | 1400 | 260 | 1800 | 300 | 2000 | 400 |
| **050** | 1200 | 240 | 1400 | 280 | 1500 | 300 | 1700 | 340 | 1900 | 380 | 2500 | 480 | 2800 | 560 |
| **063** | 1800 | 360 | 2000 | 400 | 2300 | 460 | 2500 | 500 | 3000 | 600 | 3800 | 700 | 4000 | 800 |
| **085** | 2500 | 500 | 2900 | 580 | 3000 | 600 | 3500 | 700 | 4000 | 800 | 5000 | 1000 | 5800 | 1160 |

### Lubricant Volume in Litre ($dm^3$)

The gearbox is lubricated for life, using synthetic oil. At normal operating conditions, no change is required. The lubricant volume is the same for all mounting positions. The mounting positions V5 and V6 (worm shaft vertical) are however not recommended for continuous operation.

| Size | 030 | 045 | 050 | 063 | 085 |
|---|---|---|---|---|---|
| Oil volume | 0.03 | 0.09 | 0.14 | 0.40 | 1.20 |

## Dimensions Table Worm Geared Motors HMD/I

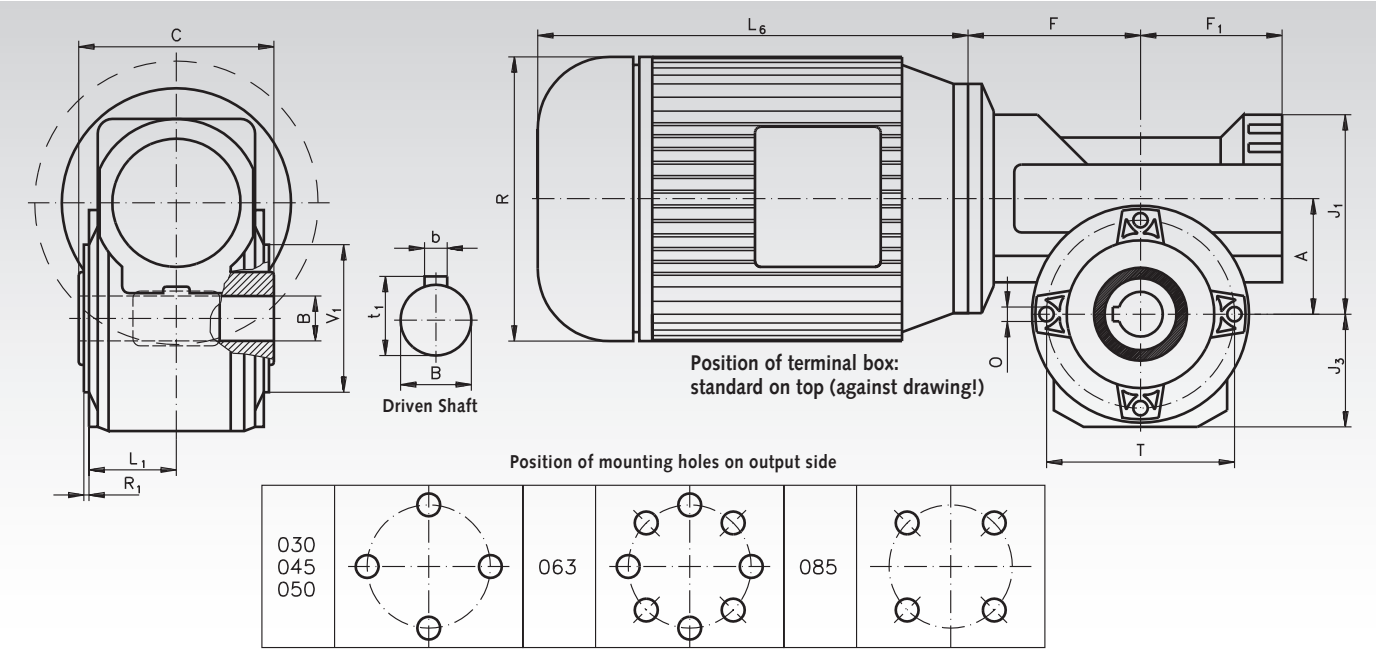


| Gearbox Size | A mm | $B^{H7}$ mm | b mm | $t_1$ mm | C mm | $F_{max.}$ mm | $F_1$ mm | $J_1$ mm | $J_3$ mm | $L_1$ mm | O Amount/Size | $R_1$ mm | T mm | $V_1^{h8}$ mm | Weight kg |
|---|---|---|---|---|---|---|---|---|---|---|---|---|---|---|---|
| **030** | 30 | 14 | 5 | 16,3 | 55 | 62,5 | 46 | 51 | 39 | 30 | 4/M6x9 | 2 | 65 | 50 | 1,0 |
| **045** | 45 | 18 | 6 | 20,8 | 65 | 74 | 55 | 72 | 49 | 35 | 4/M6x14 | 2 | 65 | 50 | 2,4 |
| **050** | 50 | 25 | 8 | 28,3 | 81 | 81,5 | 65 | 81 | 54,4 | 38 | 4/M6x9 | 3 | 94 | 68 | 3,0 |
| **063** | 63 | 25 | 8 | 28,3 | 120 | 99,5 | 79 | 100 | 70 | 45 | 8/M8x17 | 5 | 90 | 75 | 6,0 |
| **085** | 85 | 35 | 10 | 38,3 | 135 | 124 | 98 | 138 | 94,5 | 64 | 4/M10x18 | 3,5 | 130 | 110 | 11,0 |

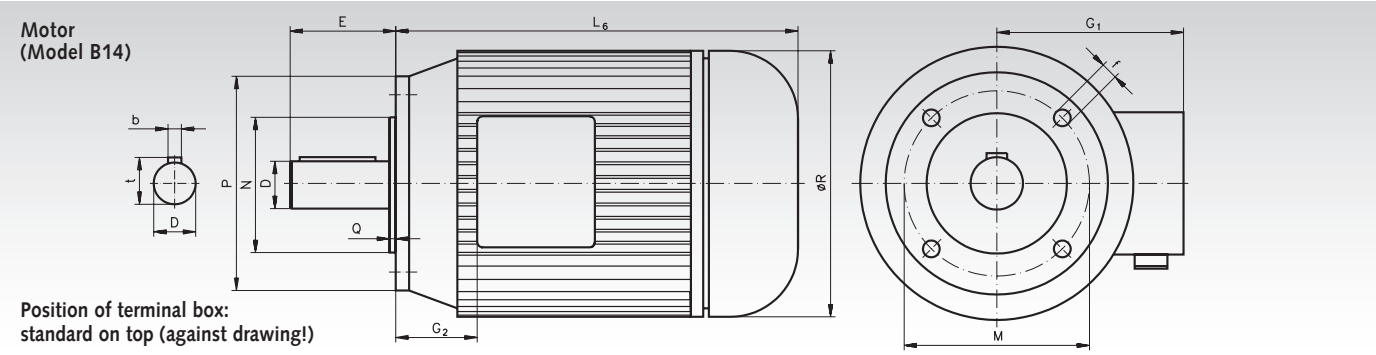


| Motor Size | D mm | b mm | t mm | E mm | f mm | $G_1$ mm | $G_2$ mm | $L_6$ mm | M mm | N mm | P mm | Q mm | R mm | Weight kg |
|---|---|---|---|---|---|---|---|---|---|---|---|---|---|---|
| **56B** | 9 | 3 | 10,2 | 20 | M5 | 112 | 13 | 179 | 65 | 50 | 80 | 2,5 | 108 | 2,9 |
| **63A** | 11 | 4 | 12,5 | 23 | M5 | 113 | 19 | 185 | 75 | 60 | 90 | 2,5 | 120 | 3,8 |
| **63B** | 11 | 4 | 12,5 | 23 | M5 | 113 | 19 | 185 | 75 | 60 | 90 | 2,5 | 120 | 4,2 |
| **71A** | 14 | 5 | 16 | 30 | M6 | 125 | 24 | 206 | 85 | 70 | 105 | 2,5 | 130 | 5,9 |
| **71B** | 14 | 5 | 16 | 30 | M6 | 125 | 24 | 225 | 85 | 70 | 105 | 2,5 | 141 | 6,5 |
| **80A** | 19 | 6 | 21,5 | 40 | M6 | 133 | 23 | 256 | 100 | 80 | 120 | 3 | 159 | 8,5 |
| **80B** | 19 | 6 | 21,5 | 40 | M6 | 133 | 23 | 256 | 100 | 80 | 120 | 3 | 159 | 10 |
| **90S** | 24 | 8 | 27 | 50 | M8 | 148 | 28 | 255 | 115 | 95 | 140 | 3 | 170 | 12,5 |
| **90L** | 24 | 8 | 27 | 50 | M8 | 148 | 28 | 280 | 115 | 95 | 140 | 3 | 170 | 15 |

### Note for Dimensioning

Three-phase motors have a very high starting torque. The max. permissible, stability related torque of the gearbox is the product of output torque and operating factor: $T_{max.} = T_2 \times f_B$

This torque must never be exceeded.

Furthermore, depending on kind of operation, factors for shock load and acceleration must be considered.

***Optionally also available with additional manual adjustment mechanism (on request).***

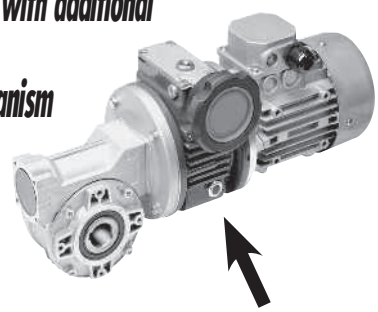

## Worm Geared Motors HMD/II

**Housing:** Aluminium, corrosion-inhibiting coating, with mounting holes for flexible foot and flange mounting.
**Worm shaft:** hardened and ground.
**Worm Gear:** Bronze, on cast iron hub.
**Lubrication:** synthetic oil (lubricated for life).
**Motor:** Standard three-phase motor with small flange B14, 230/400V, 50Hz. **From 0.75 kW in efficiency class IE2.**
Other motor versions (AC motor, posistor, forced ventilation, brake etc.) on request.

Lightweight, high quality model range. These maintenance-free geared motors, without ventilation can be used in any mounting position. The mounting positions V5 and V6 (worm shaft vertical) are however not recommended for continuous operation.

**Output shaft push-in type:** The basic gearbox version has a hollow shaft. They can, however, also be supplied with a push in type output shaft (single sided, to be used left and right, or double sided). These output shafts have their own product No. and have to be ordered separately.

**Variable mounting:** The gearboxes are supplied with mounting holes on all sides.

**Retrofittable flange:** If an output-side flange mounting is required, this flange can easily be mounted by the customer.
These flanges have their own product number and have to be ordered separately (Flange type, either square or round).

**Ordering Details: e.g.: Product No., Type, Motor power, Output Speed**
**If required: Output shaft single sided (or double sided), Product No., Gearbox Size**
**Output Flange, Gearbox Size, Prod.-No.**
**Torque Arm, Gearbox Size, Prod. No.**

| Product No. Standard Version | P kW | $n_2$ $min^{-1}$ | $T_2$ Nm | $f_B$ | $i_{ist}$ | Gearbox Size | Motor Size | Accessories (order separately)* Product No. Single-Sided Output Shaft | Product No. Double-Sided Output Shaft | Product No. Square Output Flange | Product No. Round Output Flange |
|---|---|---|---|---|---|---|---|---|---|---|---|
| 439 009 05 | 0,09 | 9 | 44 | 1,2 | 100 | 050 | 63A6 | 438 051 00 | 438 052 00 | 439 053 00 | 439 054 00 |
| 439 009 10 | 0,09 | 12,9 | 34 | 1,1 | 70 | 045 | 63A6 | 438 041 00 | 438 042 00 | 439 043 00 | 439 044 00 |
| 439 009 15 | 0,09 | 15 | 30 | 1,5 | 60 | 045 | 63A6 | 438 041 00 | 438 042 00 | 439 043 00 | 439 044 00 |
| 439 009 20 | 0,09 | 19,6 | 24 | 1,9 | 46 | 045 | 63A6 | 438 041 00 | 438 042 00 | 439 043 00 | 439 044 00 |
| 439 009 25 | 0,09 | 23 | 19 | 1 | 61 | 030 | 56B4 | 438 031 00 | 438 032 00 | 439 033 00 | – |
| 439 009 30 | 0,09 | 35 | 14 | 1,4 | 40 | 030 | 56B4 | 438 031 00 | 438 032 00 | 439 033 00 | – |
| 439 009 35 | 0,09 | 46,7 | 11 | 1,8 | 30 | 030 | 56B4 | 438 031 00 | 438 032 00 | 439 033 00 | – |
| 439 009 40 | 0,09 | 70 | 8,5 | 2,2 | 20 | 030 | 56B4 | 438 031 00 | 438 032 00 | 439 033 00 | – |
| 439 009 45 | 0,09 | 93 | 7 | 2,7 | 15 | 030 | 56B4 | 438 031 00 | 438 032 00 | 439 033 00 | – |
| 439 009 50 | 0,09 | 140 | 4,8 | 3,2 | 10 | 030 | 56B4 | 438 031 00 | 438 032 00 | 439 033 00 | – |
| 439 009 55 | 0,09 | 200 | 3 | 4,7 | 7 | 030 | 56B4 | 438 031 00 | 438 032 00 | 439 033 00 | – |
| 439 012 05 | 0,12 | 12,9 | 49 | 0,8 | 70 | 045 | 63B6 | 438 041 00 | 438 042 00 | 439 043 00 | 439 044 00 |
| 439 012 10 | 0,12 | 17,5 | 38 | 1,4 | 80 | 050 | 63A4 | 438 051 00 | 438 052 00 | 439 053 00 | 439 054 00 |
| 439 012 15 | 0,12 | 20,6 | 34 | 1,6 | 68 | 050 | 63A4 | 438 051 00 | 438 052 00 | 439 053 00 | 439 054 00 |
| 439 012 20 | 0,12 | 30,4 | 24 | 1,6 | 46 | 045 | 63A4 | 438 041 00 | 438 042 00 | 439 043 00 | 439 044 00 |
| 439 012 25 | 0,12 | 35,9 | 20 | 1 | 39 | 030 | 63A4 | 438 031 00 | 438 032 00 | 439 033 00 | – |
| 439 012 30 | 0,12 | 46,7 | 16 | 1,2 | 30 | 030 | 63A4 | 438 031 00 | 438 032 00 | 439 033 00 | – |
| 439 012 35 | 0,12 | 50 | 16 | 2,4 | 28 | 045 | 63A4 | 438 041 00 | 438 042 00 | 439 043 00 | 439 044 00 |
| 439 012 40 | 0,12 | 74 | 12 | 1,5 | 19 | 030 | 63A4 | 438 031 00 | 438 032 00 | 439 033 00 | – |
| 439 012 45 | 0,12 | 93 | 10 | 1,9 | 15 | 030 | 63A4 | 438 031 00 | 438 032 00 | 439 033 00 | – |
| 439 012 50 | 0,12 | 132 | 7 | 2,2 | 10,6 | 030 | 63A4 | 438 031 00 | 438 032 00 | 439 033 00 | – |
| 439 012 55 | 0,12 | 200 | 5 | 1,5 | 7 | 030 | 63A4 | 438 031 00 | 438 032 00 | 439 033 00 | – |
| 439 018 05 | 0,18 | 9,6 | 86 | 1,4 | 94 | 063 | 71A6 | 438 061 00 | 438 062 00 | 439 063 00 | 439 064 00 |
| 439 018 10 | 0,18 | 14 | 61 | 0,8 | 100 | 050 | 63B4 | 438 051 00 | 438 052 00 | 439 053 00 | 439 054 00 |
| 439 018 15 | 0,18 | 17,5 | 53 | 1 | 80 | 050 | 63B4 | 438 051 00 | 438 052 00 | 439 053 00 | 439 054 00 |
| 439 018 20 | 0,18 | 20,6 | 48 | 1,2 | 68 | 050 | 63B4 | 438 051 00 | 438 052 00 | 439 053 00 | 439 054 00 |
| 439 018 25 | 0,18 | 30,4 | 33 | 1,2 | 46 | 045 | 63B4 | 438 041 00 | 438 042 00 | 439 043 00 | 439 044 00 |
| 439 018 30 | 0,18 | 37,8 | 29 | 1,4 | 37 | 045 | 63B4 | 438 041 00 | 438 042 00 | 439 043 00 | 439 044 00 |
| 439 018 35 | 0,18 | 50 | 22 | 1,7 | 28 | 045 | 63B4 | 438 041 00 | 438 042 00 | 439 043 00 | 439 044 00 |
| 439 018 40 | 0,18 | 74 | 16 | 1,1 | 19 | 030 | 63B4 | 438 031 00 | 438 032 00 | 439 033 00 | – |
| 439 018 45 | 0,18 | 100 | 13 | 2,2 | 14 | 045 | 63B4 | 438 041 00 | 438 042 00 | 439 043 00 | 439 044 00 |
| 439 018 50 | 0,18 | 132 | 10 | 1,6 | 10,6 | 030 | 63B4 | 438 031 00 | 438 032 00 | 439 033 00 | – |
| 439 018 55 | 0,18 | 200 | 7 | 2,3 | 7 | 030 | 63B4 | 438 031 00 | 438 032 00 | 439 033 00 | – |

*More details and further accessories see page 741.

**Note for dimensioning see page 741. Dimensions table see page 743.**

***Optionally also available with additional manual adjustment mechanism (on request).***

| Product No. Standard Version | P kW | $n_2$ $min^{-1}$ | $T_2$ Nm | $f_B$ | $i_{ist}$ | Gearbox Size | Motor Size | Accessories (order separately)* Product No. Single-Sided Output Shaft | Product No. Double-Sided Output Shaft | Product No. Square Output Flange | Product No. Round Output Flange |
|---|---|---|---|---|---|---|---|---|---|---|---|
| 439 025 05 | 0,25 | 9,6 | 120 | 1 | 94 | 063 | 71B6 | 438 061 00 | 438 062 00 | 439 063 00 | 439 064 00 |
| 439 025 10 | 0,25 | 13,4 | 100 | 1,3 | 67 | 063 | 71B6 | 438 061 00 | 438 062 00 | 439 063 00 | 439 064 00 |
| 439 025 15 | 0,25 | 17,5 | 78 | 1,5 | 80 | 063 | 71A4 | 438 061 00 | 438 062 00 | 439 063 00 | 439 064 00 |
| 439 025 20 | 0,25 | 20,9 | 69 | 1,7 | 67 | 063 | 71A4 | 438 061 00 | 438 062 00 | 439 063 00 | 439 064 00 |
| 439 025 25 | 0,25 | 25 | 62 | 2,6 | 36 | 063 | 71B6 | 438 061 00 | 438 062 00 | 439 063 00 | 439 064 00 |
| 439 025 30 | 0,25 | 32,6 | 48 | 1,3 | 43 | 050 | 71A4 | 438 051 00 | 438 052 00 | 439 053 00 | 439 054 00 |
| 439 025 35 | 0,25 | 38,9 | 42 | 1,6 | 36 | 050 | 71A4 | 438 051 00 | 438 052 00 | 439 053 00 | 439 054 00 |
| 439 025 40 | 0,25 | 50 | 31 | 1,3 | 28 | 045 | 71A4 | 438 041 00 | 438 042 00 | 439 043 00 | 439 044 00 |
| 439 025 45 | 0,25 | 67 | 24 | 1,6 | 21 | 045 | 71A4 | 438 041 00 | 438 042 00 | 439 043 00 | 439 044 00 |
| 439 025 50 | 0,25 | 100 | 18 | 1,6 | 14 | 045 | 71A4 | 438 041 00 | 438 042 00 | 439 043 00 | 439 044 00 |
| 439 025 55 | 0,25 | 140 | 13 | 2,2 | 10 | 045 | 71A4 | 438 041 00 | 438 042 00 | 439 043 00 | 439 044 00 |
| 439 025 60 | 0,25 | 200 | 10 | 3 | 7 | 045 | 71A4 | 438 041 00 | 438 042 00 | 439 043 00 | 439 044 00 |
| 439 037 05 | 0,37 | 14,9 | 123 | 0,8 | 94 | 063 | 71B4 | 438 061 00 | 438 062 00 | 439 063 00 | 439 064 00 |
| 439 037 10 | 0,37 | 17,5 | 115 | 1 | 80 | 063 | 71B4 | 438 061 00 | 438 062 00 | 439 063 00 | 439 064 00 |
| 439 037 15 | 0,37 | 20,9 | 101 | 1,2 | 67 | 063 | 71B4 | 438 061 00 | 438 062 00 | 439 063 00 | 439 064 00 |
| 439 037 20 | 0,37 | 31,1 | 75 | 1,7 | 45 | 063 | 71B4 | 438 061 00 | 438 062 00 | 439 063 00 | 439 064 00 |
| 439 037 25 | 0,37 | 38,9 | 62 | 2,3 | 36 | 063 | 71B4 | 438 061 00 | 438 062 00 | 439 063 00 | 439 064 00 |
| 439 037 30 | 0,37 | 46,7 | 56 | 2,5 | 30 | 063 | 71B4 | 438 061 00 | 438 062 00 | 439 063 00 | 439 064 00 |
| 439 037 35 | 0,37 | 54 | 45 | 1,4 | 26 | 050 | 71B4 | 438 051 00 | 438 052 00 | 439 053 00 | 439 054 00 |
| 439 037 40 | 0,37 | 67 | 36 | 1,1 | 21 | 045 | 71B4 | 438 041 00 | 438 042 00 | 439 043 00 | 439 044 00 |
| 439 037 45 | 0,37 | 78 | 34 | 1,7 | 18 | 050 | 71B4 | 438 051 00 | 438 052 00 | 439 053 00 | 439 054 00 |
| 439 037 50 | 0,37 | 100 | 27 | 1,1 | 14 | 045 | 71B4 | 438 041 00 | 438 042 00 | 439 043 00 | 439 044 00 |
| 439 037 55 | 0,37 | 140 | 20 | 1,5 | 10 | 045 | 71B4 | 438 041 00 | 438 042 00 | 439 043 00 | 439 044 00 |
| 439 037 60 | 0,37 | 200 | 14 | 2,1 | 7 | 045 | 71B4 | 438 041 00 | 438 042 00 | 439 043 00 | 439 044 00 |
| 439 055 05 | 0,55 | 9,4 | 280 | 0,9 | 96 | 085 | 80B6 | 438 081 00 | 438 082 00 | – | 439 084 00 |
| 439 055 10 | 0,55 | 13,4 | 239 | 1,2 | 67 | 085 | 80B6 | 438 081 00 | 438 082 00 | – | 439 084 00 |
| 439 055 15 | 0,55 | 18,9 | 161 | 1,6 | 74 | 085 | 80A4 | 438 081 00 | 438 082 00 | – | 439 084 00 |
| 439 055 20 | 0,55 | 20,9 | 163 | 1,7 | 67 | 085 | 80A4 | 438 081 00 | 438 082 00 | – | 439 084 00 |
| 439 055 25 | 0,55 | 26,9 | 129 | 2,1 | 52 | 085 | 80A4 | 438 081 00 | 438 082 00 | – | 439 084 00 |
| 439 055 30 | 0,55 | 31,1 | 111 | 1,2 | 45 | 063 | 80A4 | 438 061 00 | 438 062 00 | 439 063 00 | 439 064 00 |
| 439 055 35 | 0,55 | 38,9 | 92 | 1,5 | 36 | 063 | 80A4 | 438 061 00 | 438 062 00 | 439 063 00 | 439 064 00 |
| 439 055 40 | 0,55 | 46,7 | 83 | 1,7 | 30 | 063 | 80A4 | 438 061 00 | 438 062 00 | 439 063 00 | 439 064 00 |
| 439 055 45 | 0,55 | 58 | 68 | 2 | 24 | 063 | 80A4 | 438 061 00 | 438 062 00 | 439 063 00 | 439 064 00 |
| 439 055 50 | 0,55 | 74 | 56 | 2,4 | 19 | 063 | 80A4 | 438 061 00 | 438 062 00 | 439 063 00 | 439 064 00 |
| 439 055 55 | 0,55 | 93 | 44 | 2,9 | 15 | 063 | 80A4 | 438 061 00 | 438 062 00 | 439 063 00 | 439 064 00 |
| 439 055 60 | 0,55 | 140 | 30 | 2 | 10 | 050 | 80A4 | 438 051 00 | 438 052 00 | 439 053 00 | 439 054 00 |
| 439 075 05 | 0,75 | 14,6 | 260 | 0,9 | 96 | 085 | 80B4 | 438 081 00 | 438 082 00 | – | 439 084 00 |
| 439 075 10 | 0,75 | 18,9 | 220 | 1,2 | 74 | 085 | 80B4 | 438 081 00 | 438 082 00 | – | 439 084 00 |
| 439 075 15 | 0,75 | 20,9 | 223 | 1,2 | 67 | 085 | 80B4 | 438 081 00 | 438 082 00 | – | 439 084 00 |
| 439 075 20 | 0,75 | 26,9 | 176 | 1,6 | 52 | 085 | 80B4 | 438 081 00 | 438 082 00 | – | 439 084 00 |
| 439 075 25 | 0,75 | 30,4 | 160 | 1,9 | 46 | 085 | 80B4 | 438 081 00 | 438 082 00 | – | 439 084 00 |
| 439 075 30 | 0,75 | 36,8 | 138 | 2,3 | 38 | 085 | 80B4 | 438 081 00 | 438 082 00 | – | 439 084 00 |
| 439 075 35 | 0,75 | 46,7 | 114 | 1,2 | 30 | 063 | 80B4 | 438 061 00 | 438 062 00 | 439 063 00 | 439 064 00 |
| 439 075 40 | 0,75 | 58 | 92 | 1,5 | 24 | 063 | 80B4 | 438 061 00 | 438 062 00 | 439 063 00 | 439 064 00 |
| 439 075 45 | 0,75 | 74 | 76 | 1,7 | 19 | 063 | 80B4 | 438 061 00 | 438 062 00 | 439 063 00 | 439 064 00 |
| 439 075 50 | 0,75 | 93 | 61 | 2,2 | 15 | 063 | 80B4 | 438 061 00 | 438 062 00 | 439 063 00 | 439 064 00 |
| 439 075 55 | 0,75 | 100 | 57 | 1,1 | 14 | 050 | 80B4 | 438 051 00 | 438 052 00 | 439 053 00 | 439 054 00 |
| 439 075 60 | 0,75 | 140 | 41 | 1,4 | 10 | 050 | 80B4 | 438 051 00 | 438 052 00 | 439 053 00 | 439 054 00 |
| 439 110 05 | 1,1 | 18,9 | 322 | 0,8 | 74 | 085 | 90S4 | 438 081 00 | 438 082 00 | – | 439 084 00 |
| 439 110 10 | 1,1 | 20,9 | 327 | 0,8 | 67 | 085 | 90S4 | 438 081 00 | 438 082 00 | – | 439 084 00 |
| 439 110 15 | 1,1 | 26,9 | 258 | 1,1 | 52 | 085 | 90S4 | 438 081 00 | 438 082 00 | – | 439 084 00 |
| 439 110 20 | 1,1 | 30,4 | 235 | 1,3 | 46 | 085 | 90S4 | 438 081 00 | 438 082 00 | – | 439 084 00 |
| 439 110 25 | 1,1 | 36,8 | 202 | 1,6 | 38 | 085 | 90S4 | 438 081 00 | 438 082 00 | – | 439 084 00 |
| 439 110 30 | 1,1 | 38,9 | 184 | 0,8 | 36 | 063 | 90S4 | 438 061 00 | 438 062 00 | 439 063 00 | 439 064 00 |
| 439 110 35 | 1,1 | 46,7 | 167 | 0,8 | 30 | 063 | 90S4 | 438 061 00 | 438 062 00 | 439 063 00 | 439 064 00 |
| 439 110 40 | 1,1 | 50 | 158 | 2,1 | 28 | 085 | 90S4 | 438 081 00 | 438 082 00 | – | 439 084 00 |
| 439 110 45 | 1,1 | 58 | 135 | 1 | 24 | 063 | 90S4 | 438 061 00 | 438 062 00 | 439 063 00 | 439 064 00 |
| 439 110 50 | 1,1 | 64 | 129 | 2,2 | 22 | 085 | 90S4 | 438 081 00 | 438 082 00 | – | 439 084 00 |
| 439 110 55 | 1,1 | 74 | 111 | 1,2 | 19 | 063 | 90S4 | 438 061 00 | 438 062 00 | 439 063 00 | 439 064 00 |
| 439 110 60 | 1,1 | 93 | 89 | 1,5 | 15 | 063 | 90S4 | 438 061 00 | 438 062 00 | 439 063 00 | 439 064 00 |
| 439 110 65 | 1,1 | 100 | 82 | 3,5 | 14 | 085 | 90S4 | 438 081 00 | 438 082 00 | – | 439 084 00 |
| 439 110 70 | 1,1 | 140 | 61 | 2,1 | 10 | 063 | 90S4 | 438 061 00 | 438 062 00 | 439 063 00 | 439 064 00 |
| 439 150 05 | 1,5 | 26,9 | 351 | 0,8 | 52 | 085 | 90LA4 | 438 081 00 | 438 082 00 | – | 439 084 00 |
| 439 150 10 | 1,5 | 30,4 | 320 | 1 | 46 | 085 | 90LA4 | 438 081 00 | 438 082 00 | – | 439 084 00 |
| 439 150 15 | 1,5 | 36,8 | 276 | 1,2 | 38 | 085 | 90LA4 | 438 081 00 | 438 082 00 | – | 439 084 00 |
| 439 150 20 | 1,5 | 50 | 215 | 1,5 | 28 | 085 | 90LA4 | 438 081 00 | 438 082 00 | – | 439 084 00 |
| 439 150 25 | 1,5 | 64 | 176 | 1,6 | 22 | 085 | 90LA4 | 438 081 00 | 438 082 00 | – | 439 084 00 |
| 439 150 30 | 1,5 | 70 | 162 | 1,7 | 20 | 085 | 90LA4 | 438 081 00 | 438 082 00 | – | 439 084 00 |
| 439 150 35 | 1,5 | 74 | 152 | 0,9 | 19 | 063 | 90LA4 | 438 061 00 | 438 062 00 | 439 063 00 | 439 064 00 |
| 439 150 40 | 1,5 | 93 | 121 | 1,1 | 15 | 063 | 90LA4 | 438 061 00 | 438 062 00 | 439 063 00 | 439 064 00 |
| 439 150 45 | 1,5 | 100 | 112 | 2,6 | 14 | 085 | 90LA4 | 438 081 00 | 438 082 00 | – | 439 084 00 |
| 439 150 50 | 1,5 | 140 | 83 | 1,5 | 10 | 063 | 90LA4 | 438 061 00 | 438 062 00 | 439 063 00 | 439 064 00 |

Note for dimensioning see page 741. Dimensions table see page 743.

## Push-In Output Shafts HMD, Single Sided

**Material:** Steel.

To change the gearboxes HMD/II over from hollow shaft to solid shaft. The shaft is only pushed in and secured with the enclosed cover disc and mounting screw.

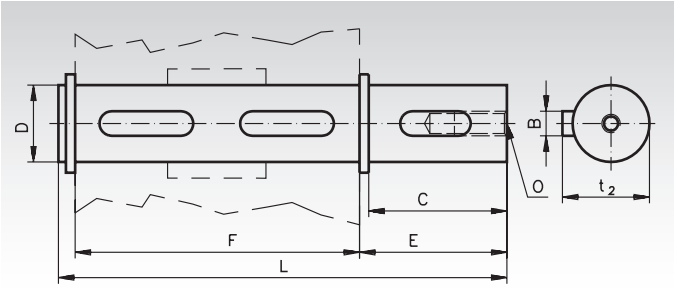


**Ordering Details: e.g.: Product No. 438 031 00, Push-In Output Shaft, Single Sided, Gearbox Size 030**

| Product No. | Gearbox Size | B mm | C mm | D mm | E mm | F mm | L mm | O mm | $t_2$ mm | Weight kg |
|---|---|---|---|---|---|---|---|---|---|---|
| **438 031 00** | 030 | 5 | 25 | 14 | 35,5 | 55 | 94,5 | M5x14 | 15,8 | 0,12 |
| **438 041 00** | 045 | 6 | 32 | 18 | 43,0 | 65 | 113,0 | M6x18 | 20,5 | 0,23 |
| **438 051 00** | 050 | 8 | 52 | 25 | 59,5 | 81 | 146,0 | M8x20 | 28 | 0,57 |
| **438 061 00** | 063 | 8 | 60 | 25 | 63,2 | 120 | 190,0 | M8x20 | 28 | 0,73 |
| **438 081 00** | 085 | 10 | 60 | 35 | 73,5 | 135 | 214,5 | M10x23 | 38 | 1,52 |

## Push-In Output Shafts HMD, Double Sided

**Material:** Steel.

To change the gearboxes HMD/II over from hollow shaft to solid shaft on both sides. The shaft is only pushed in and secured with the enclosed circlip.

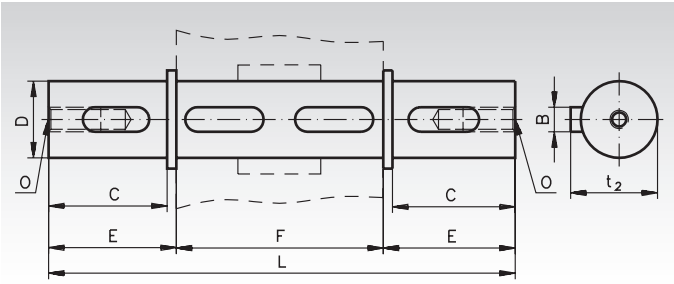


**Ordering Details: e.g.: Product No. 438 032 00, Push-In Output Shaft, Double Sided, Gearbox Size 030**

| Product No. | Gearbox Size | B mm | C mm | D mm | E mm | F mm | L mm | O mm | $t_2$ mm | Weight kg |
|---|---|---|---|---|---|---|---|---|---|---|
| **438 032 00** | 030 | 5 | 25 | 14 | 35,5 | 55 | 126,0 | M5x14 | 15,8 | 0,16 |
| **438 042 00** | 045 | 6 | 32 | 18 | 43,0 | 65 | 151,0 | M6x18 | 20,5 | 0,33 |
| **438 052 00** | 050 | 8 | 52 | 25 | 59,5 | 81 | 200,0 | M8x20 | 28 | 0,77 |
| **438 062 00** | 063 | 8 | 60 | 25 | 63,2 | 120 | 246,4 | M8x20 | 28 | 0,93 |
| **438 082 00** | 085 | 10 | 60 | 35 | 73,5 | 135 | 282,0 | M10x23 | 38 | 1,73 |

## Permissible Radial and Axial Loads

The values are calculated for the middle of the input shaft end as a function of the output speed $n_2$ in rpm. $F_R$ is the max. permissible radial load for $F_A = 0$. $F_A$ is the max. permissible axial load for $F_R = 0$.

| Gearbox Size | 200 $min^{-1}$ | | 150 $min^{-1}$ | | 100 $min^{-1}$ | | 75 $min^{-1}$ | | 50 $min^{-1}$ | | 25 $min^{-1}$ | | 15 $min^{-1}$ | |
|---|---|---|---|---|---|---|---|---|---|---|---|---|---|---|
| | $F_R$ N | $F_A$ N | $F_R$ N | $F_A$ N | $F_R$ N | $F_A$ N | $F_R$ N | $F_A$ N | $F_R$ N | $F_A$ N | $F_R$ N | $F_A$ N | $F_R$ N | $F_A$ N |
| **030** | 600 | 120 | 700 | 140 | 800 | 160 | 900 | 180 | 1000 | 200 | 1250 | 250 | 1400 | 280 |
| **045** | 900 | 180 | 1000 | 200 | 1100 | 220 | 1200 | 240 | 1400 | 260 | 1800 | 300 | 2000 | 400 |
| **050** | 1200 | 240 | 1400 | 280 | 1500 | 300 | 1700 | 340 | 1900 | 380 | 2500 | 480 | 2800 | 560 |
| **063** | 1800 | 360 | 2000 | 400 | 2300 | 460 | 2500 | 500 | 3000 | 600 | 3800 | 700 | 4000 | 800 |
| **085** | 2500 | 500 | 2900 | 580 | 3000 | 600 | 3500 | 700 | 4000 | 800 | 5000 | 1000 | 5800 | 1160 |

## Lubricant Volume in Litre ($dm^3$)

The gearbox is lubricated for life, using synthetic oil. At normal operating conditions no change is required. The lubricant volume is the same for all mounting positions.
The mounting positions V5 and V6 (worm shaft vertical) are however not recommended for continuous operation.

| Size | 030 | 045 | 050 | 063 | 085 |
|---|---|---|---|---|---|
| Oil volume | 0.03 | 0.09 | 0.14 | 0.30 | 1.20 |

## Note for Dimensioning

Three-phase motors have a very high starting torque. The max. permissible, stability related torque of the gearbox is the product of output torque and operating factor: $T_{max.} = T_2 \times f_B$

This torque must never be exceeded.

Furthermore, depending on kind of operation,

factors for shock load and acceleration must be considered.

## Output-side Flanges HMD/II, square

**Material:** Aluminium.
Square flange with fixing screws for retrofitting.

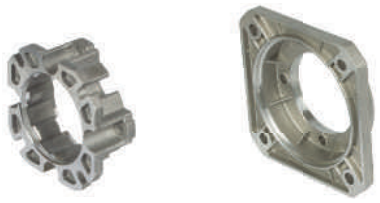

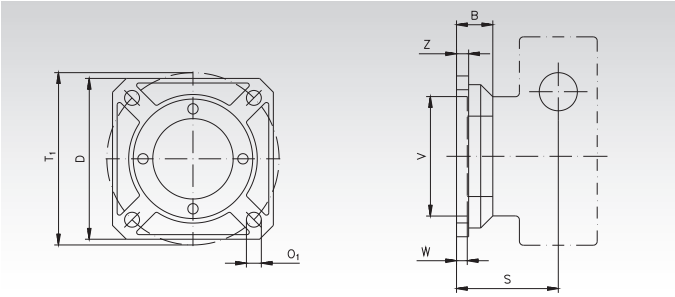


**Ordering Details: e.g.: Product No. 439 033 00, Output-Side Flange, 70 x 70 mm**

| Product No. | Gearbox Size | D mm | B mm | O1 mm | S mm | T1 mm | V mm | W mm | Z mm | Screws Amount x size | Weight kg |
|---|---|---|---|---|---|---|---|---|---|---|---|
| **439 033 00** | 030 | 70 | 25,5 | 6,5 | 54,5 | 68 | 50 | 4 | 6 | 4 x M6 | 0,11 |
| **439 043 00** | 045 | 95 | 30,5 | 9 | 67 | 75 | 60 | 4 | 7 | 4 x M6 | 0,20 |
| **439 053 00** | 050 | 110 | 46,5 | 11 | 90 | 85 | 70 | 5 | 9 | 4 x M8 | 0,40 |
| **439 063 00** | 063 | 142 | 33,0 | 11 | 86 | 150 | 115 | 6 | 12 | 4 x M8 | 0,60 |

## Output-side Flanges HMD/II, round

**Material:** Aluminium.
Round flange with fixing screws for retrofitting.

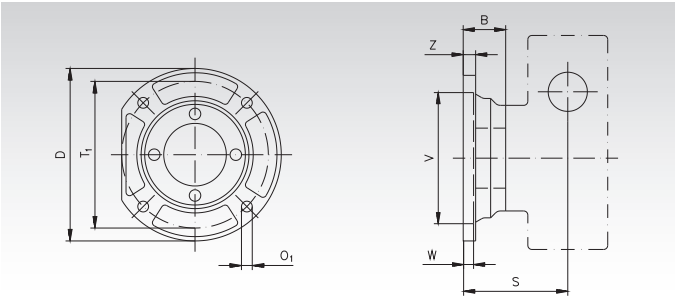


**Ordering Details: e.g.: Product No. 439 044 00, Output-Side Flange, Ø 140 mm.**

| Product No. | Gearbox Size | D mm | B mm | $O_1$ mm | S mm | $T_1$ mm | V mm | W mm | Z mm | Screws Amount x Size | Weight kg |
|---|---|---|---|---|---|---|---|---|---|---|---|
| **439 044 00** | 045 | 140 | 43,5 | 9,5 | 80 | 115 | 95 | 5 | 9 | 4 x M6 | 0,20 |
| **439 054 00** | 050 | 160 | 45,5 | 9,5 | 89 | 130 | 110 | 5 | 10 | 4 x M8 | 0,40 |
| **439 064 00** | 063 | 200 | 57,0 | 13,0 | 110 | 165 | 130 | 7 | 13 | 4 x M8 | 0,60 |
| **439 084 00** | 085 | 200 | 53,5 | 11,5 | 117,5 | 165 | 130 | 5 | 13 | 4 x M10 | 0,88 |

## Torque Arms HMD/II

**Material:** Steel sheet, zinc plated.
Torque arm with mounting screws for retrofitting.
The position can be changed in steps of 90°.

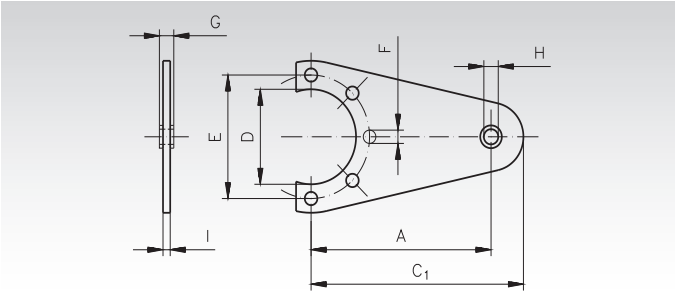


**Ordering Details: e.g.: Product No. 439 035 00, Torque Arm, Gearbox Size 030**

| Product No. | Gearbox Size | A mm | $C_1$ mm | D mm | E mm | F mm | G mm | H mm | I mm | Screws Amount x Size | Weight kg |
|---|---|---|---|---|---|---|---|---|---|---|---|
| **439 035 00** | 030 | 85 | 100 | 55 | 65 | 7 | 14 | 8 | 4 | 3 x M6 | 0,21 |
| **439 045 00** | 045 | 100 | 118 | 60 | 75 | 7 | 14 | 10 | 4 | 3 x M6 | 0,21 |
| **439 055 00** | 050 | 100 | 118 | 70 | 85 | 9 | 14 | 10 | 4 | 3 x M8 | 0,26 |
| **439 065 00** | 063 | 150 | 180 | 75 | 90 | 9 | 20 | 11 | 6 | 3 x M8 | 0,70 |
| **439 085 00** | 085 | 200 | 240 | 110 | 130 | 11 | 25 | 21 | 6 | 3 x M10 | 1,44 |

## Dimensions Table Worm Geared Motors HMD/II

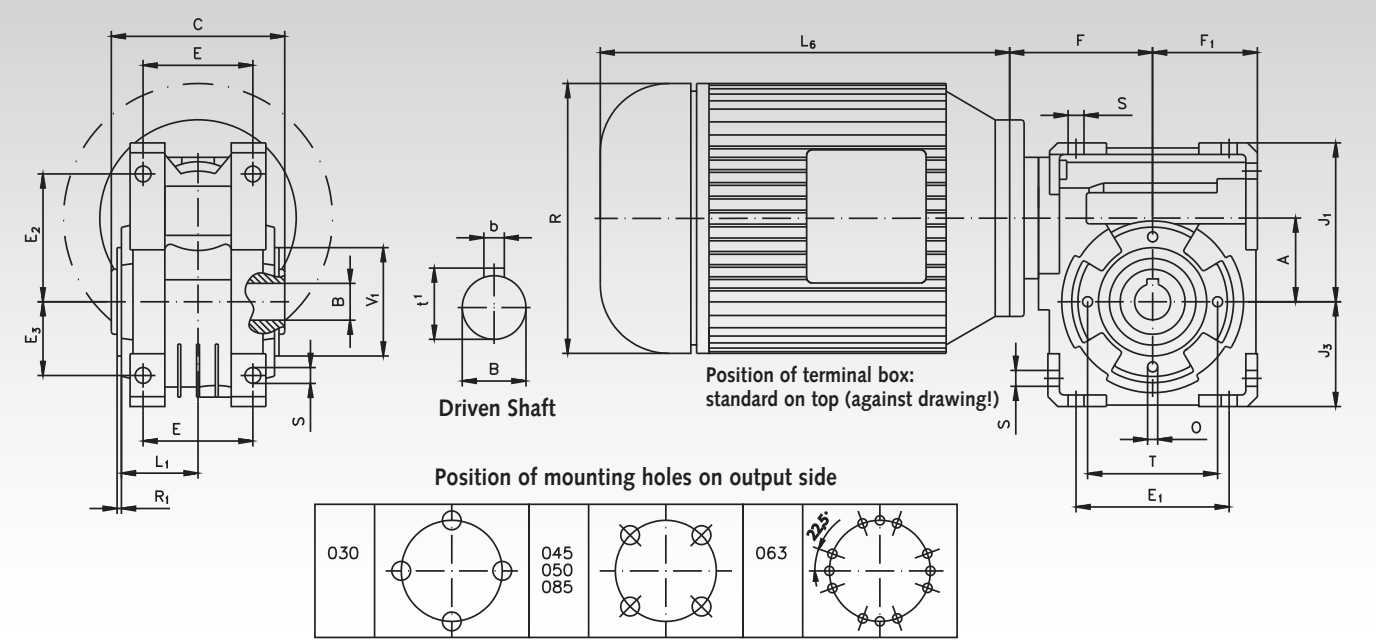


| Gearbox Size | A mm | $B^{H7}$ mm | b mm | $t_1$ mm | C mm | $F_{max.}$ mm | $F_1$ mm | $J_1$ mm | $J_3$ mm | $L_1$ mm | $R_1$ mm | $V_1^{h8}$ mm | Weight kg |
|---|---|---|---|---|---|---|---|---|---|---|---|---|---|
| **030** | 30 | 14 | 5 | 16,3 | 55 | 62,5 | 40 | 57 | 40 | 29 | 2,5 | 55 | 1,2 |
| **045** | 45 | 18 | 6 | 20,8 | 65 | 80 | 50 | 71,5 | 50 | 36,5 | 2,5 | 60 | 2,3 |
| **050** | 50 | 25 | 8 | 28,3 | 81 | 79 | 60 | 84 | 60 | 43,5 | 2,5 | 70 | 3,3 |
| **063** | 63 | 25 | 8 | 28,3 | 120 | 99,5 | 72,5 | 110 | 72,5 | 53 | 3,0 | 75 | 6,0 |
| **085** | 85 | 35 | 10 | 38,3 | 135 | 124 | 100 | 145,5 | 100 | 64 | 3,5 | 110 | 12 |

### Mounting Holes

| Gearbox Size | E mm | $E_1$ mm | $E_2$ mm | $E_3$ mm | S mm | T mm | O Amount+Size |
|---|---|---|---|---|---|---|---|
| **030** | 44 | 54 | 44 | 27 | 6,5 | 65 | 4xM6x11 |
| **045** | 60 | 70 | 55 | 35 | 6,5 | 75 | 4xM6x12 |
| **050** | 70 | 80 | 64 | 40 | 8,5 | 85 | 4xM8x11 |
| **063** | 76 | 102 | 88,5 | 51 | 9,5 | 90 | 12xM8x14 |
| **085** | 101 | 144 | 117,5 | 72 | 11 | 130 | 4xM10x17 |

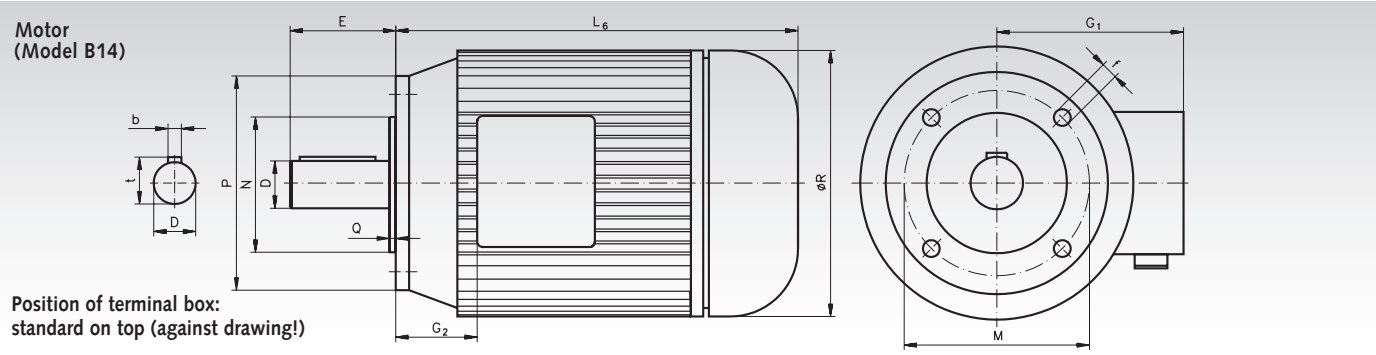


| Motor Size | D mm | b mm | t mm | E mm | f mm | $G_1$ mm | $G_2$ mm | $L_6$ mm | M mm | N mm | P mm | Q mm | R mm | Weight kg |
|---|---|---|---|---|---|---|---|---|---|---|---|---|---|---|
| **56B** | 9 | 3 | 10,2 | 20 | M5 | 112 | 13 | 179 | 65 | 50 | 80 | 2,5 | 108 | 2,9 |
| **63A** | 11 | 4 | 12,5 | 23 | M5 | 113 | 19 | 185 | 75 | 60 | 90 | 2,5 | 120 | 3,8 |
| **63B** | 11 | 4 | 12,5 | 23 | M5 | 113 | 19 | 185 | 75 | 60 | 90 | 2,5 | 120 | 4,2 |
| **71A** | 14 | 5 | 16 | 30 | M6 | 125 | 24 | 206 | 85 | 70 | 105 | 2,5 | 130 | 5,9 |
| **71B** | 14 | 5 | 16 | 30 | M6 | 125 | 24 | 225 | 85 | 70 | 105 | 2,5 | 141 | 6,5 |
| **80A** | 19 | 6 | 21,5 | 40 | M6 | 133 | 23 | 256 | 100 | 80 | 120 | 3 | 159 | 8,5 |
| **80B** | 19 | 6 | 21,5 | 40 | M6 | 133 | 23 | 256 | 100 | 80 | 120 | 3 | 159 | 10 |
| **90S** | 24 | 8 | 27 | 50 | M8 | 148 | 28 | 255 | 115 | 95 | 140 | 3 | 170 | 12,5 |
| **90L** | 24 | 8 | 27 | 50 | M8 | 148 | 28 | 280 | 115 | 95 | 140 | 3 | 170 | 15 |

## Worm Geared Motors ZMD/I

**General data:** Versatile, high-performance gearboxes.
4 sizes, centre distance 40, 50, 63 and 80 mm. Centre distance 100 - 315 mm available on request.

**Housing:** High-quality grey cast iron, all sides machined and with mounting holes on 4 sides.

**Gearing:** 12 ratios from 5 to 83 : 1; worm shaft hardened and ground. Worm gear made from special centrifugally cast bronze.

**Efficiency factor:** The efficiency factors stated in the selection tables are guideline values for properly run-in and lubricated gearboxes at operating temperature with nominal load and driving worm shaft. Proper running in is a crucial factor influencing the lifetime of the gearbox. The starting efficiency factor ($\eta_A$) is, as the operating efficiency factor (h), depending on the lead angle.

**Self-locking:** Self-locking only occurs in worm gear units, when the unit cannot be driven from the output side. Worms with 4 and 6 threads sometimes permit transmission ratios for gearing up (i = 5 : 1 to 13,3 : 1). If a gearbox must be implicitly self-locking, or must implicitly not be self-locking, we urge you to contact us.

**Bearing system:** All gearbox shafts with generously dimensioned roller bearings.

**Lubrication**: The gearboxes are lubricated for life using synthetic oil. Under normal operating conditions, no maintenance is required. The housing should be checked for leakages at an interval of approx. 2 years.

**Ventilation:** Size (centre distance) 40 is supplied without ventilation. With the other gearboxes, the seal plug has to be exchanged with the separately packed venting filter.

**Motor: From 0.75 kW in efficiency class IE2.** Datas page 748.

**Version A** with output-side shaft right, on request also on the left or double sided (without picture).

**Version HL** with output-side hollow shaft.

Position of terminal box: standard on top (against photo).
Output flange and foot mounting available at extra charge.

### Weights

| Gearbox Size | kg | Motor | kg |
|---|---|---|---|
| **40** | 7 | **63 S/L** | 5 / 6 |
| **50** | 12 | **71 S/L** | 7 / 8 |
| **63** | 18 | **80 S/L** | 10 / 11 |
| **80** | 28 | **90 S/L** | 18 / 22 |

### Venting Filter (VF)

| Size | A mm | B mm | C mm | D mm | E mm | F mm |
|---|---|---|---|---|---|---|
| **40** | - | - | - | - | - | - |
| **50** | 50 | 20 | 33 | 22 | 58 | 25 |
| **63** | 62,5 | 27,5 | 37 | 22 | 67 | 25 |
| **80** | 77,5 | 32,5 | 57 | 22 | 82 | 25 |

### Lubricant Volume in Litre (dm³)

| Size | Mounting Position 1 | 2 | 3 + 4 | 5 + 6 |
|---|---|---|---|---|
| **40** | 0,20 | 0,25 | 0,20 | 0,20 |
| **50** | 0,30 | 0,60 | 0,45 | 0,45 |
| **63** | 0,50 | 1,10 | 0,70 | 0,80 |
| **80** | 0,90 | 2,10 | 1,40 | 1,60 |

The standard lubrication volume is calculated for mounting position 2. For other mounting positions and high permanent speeds it might have to be reduced, to prevent oil leakages.

### Position of Oil Fittings Gearbox Size 50 - 80

Mounting Position 1

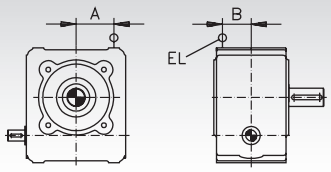


Mounting Position 2

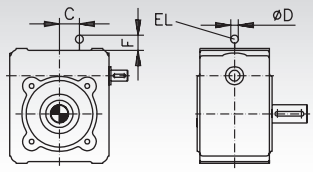


Mounting Position 3

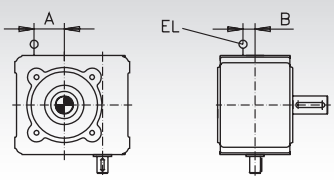


Mounting Position 4

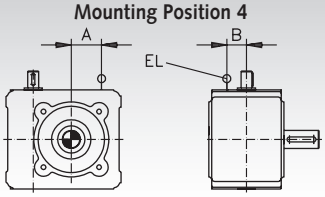


Mounting Position 5

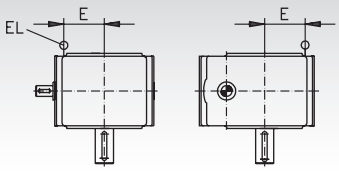


Mounting Position 6

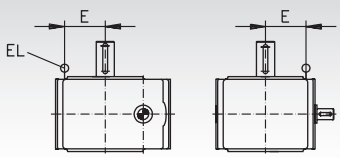


### Mounting Sides

The worm gear units can be mounted in any position and the shaft ends can be positioned to your order.

**Sizes 40 - 80**

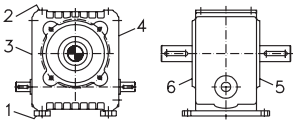

## Worm Geared Motors ZMD/I, Technical Data (Other Power Settings and Output Speeds On Request)

| Version A Output Side 5 Product No. | Version HL Product No. | $P_1$ kW | $n_2$ $min^{-1}$ | $T_{2nom.}$ Nm | $f_B$ | $T_{2A}$ Nm | $i_{ist}$ | Gearbox Size | Motor Size |
|---|---|---|---|---|---|---|---|---|---|
| 437 510 13 | 437 010 13 | 0,12 | 13,4 | 46 | 1,08 | 53 | 63 | 40 | 63L/6 |
| 437 510 16 | 437 010 16 | 0,12 | 16,3 | 37 | 1,04 | 54 | 82 | 40 | 63S/4 |
| 437 510 21 | 437 010 21 | 0,12 | 21,2 | 31 | 1,59 | 41 | 63 | 40 | 63S/4 |
| 437 510 29 | 437 010 29 | 0,12 | 29,1 | 27 | 2,17 | 31 | 29 | 40 | 63L/6 |
| 437 510 34 | 437 010 34 | 0,12 | 34,2 | 23 | 2,51 | 34 | 39 | 40 | 63S/4 |
| 437 510 43 | 437 010 43 | 0,12 | 43,3 | 21 | 2,41 | 29 | 19,5 | 40 | 63L/6 |
| 437 510 46 | 437 010 46 | 0,12 | 46,0 | 18 | 2,9 | 25 | 29 | 40 | 63S/4 |
| 437 510 51 | 437 010 51 | 0,12 | 51,4 | 17 | 2,32 | 30 | 26 | 40 | 63S/4 |
| 437 510 65 | 437 010 65 | 0,12 | 65,0 | 15 | 2,66 | 23 | 13 | 40 | 63L/6 |
| 437 520 14 | 437 020 14 | 0,18 | 14,3 | 71 | 1,55 | 64 | 62 | 50 | 71S/6 |
| - | 437 020 17 | 0,18 | 17,4 | 65 | 1,38 | 69 | 51,4 | 50 | 71S/6 |
| 437 520 22 | 437 020 22 | 0,18 | 22,7 | 50 | 1,29 | 53 | 39 | 40 | 71S/6 |
| 437 520 25 | 437 020 25 | 0,18 | 25,3 | 44 | 1,14 | 65 | 52 | 40 | 63S/2 |
| 437 520 33 | 437 020 33 | 0,18 | 33,1 | 29 | 1,31 | 38 | 82 | 40 | 63S/2 |
| 437 520 34 | 437 020 34 | 0,18 | 34,7 | 39 | 2,07 | 46 | 25,5 | 50 | 71S/6 |
| 437 520 45 | 437 020 45 | 0,18 | 45,4 | 30 | 1,67 | 35 | 19,5 | 40 | 71S/6 |
| 437 520 51 | 437 020 51 | 0,18 | 51,4 | 26 | 1,52 | 43 | 26 | 40 | 63L/4 |
| 437 520 67 | 437 020 67 | 0,18 | 67,4 | 21 | 2,41 | 32 | 19,5 | 40 | 63L/4 |
| 437 521 01 | 437 021 01 | 0,18 | 101,2 | 15 | 2,06 | 26 | 13 | 40 | 63L/4 |
| 437 530 14 | 437 030 14 | 0,25 | 14,4 | 98 | 1,12 | 92 | 62 | 50 | 71L/6 |
| 437 530 17 | 437 030 17 | 0,25 | 17,5 | 89 | 1,00 | 101 | 51 | 50 | 71L/6 |
| 437 530 22 | 437 030 22 | 0,25 | 22,8 | 77 | 2,78 | 77 | 39 | 50 | 71L/6 |
| 437 530 26 | 437 030 26 | 0,25 | 26,8 | 61 | 1,39 | 78 | 51 | 50 | 71S/4 |
| 437 530 33 | 437 030 33 | 0,25 | 33,1 | 40 | 0,95 | 60 | 82 | 40 | 63L/2 |
| 437 530 35 | 437 030 35 | 0,25 | 35,0 | 48 | 1,22 | 60 | 39 | 40 | 71S/4 |
| 437 530 45 | 437 030 45 | 0,25 | 45,6 | 41 | 1,21 | 51 | 19,5 | 40 | 71L/6 |
| 437 530 52 | 437 030 52 | 0,25 | 52,5 | 35 | 1,13 | 53 | 26 | 40 | 71S/4 |
| 437 530 70 | 437 030 70 | 0,25 | 70,0 | 28 | 1,8 | 40 | 19,5 | 40 | 71S/4 |
| 437 531 05 | 437 031 05 | 0,25 | 105,0 | 20 | 1,53 | 32 | 13 | 40 | 71S/4 |
| 437 540 14 | 437 040 14 | 0,37 | 14,8 | 152 | 1,37 | 143 | 61 | 63 | 80S/6 |
| 437 540 17 | 437 040 17 | 0,37 | 17,0 | 152 | 1,89 | 165 | 53 | 80 | 80S/6 |
| 437 540 22 | 437 040 22 | 0,37 | 22,0 | 108 | 1,69 | 93 | 61 | 63 | 71L/4 |
| 437 540 26 | 437 040 26 | 0,37 | 26,3 | 99 | 1,96 | 103 | 51 | 63 | 71L/4 |
| 437 540 33 | 437 040 33 | 0,37 | 33,4 | 70 | 2,0 | 77 | 82 | 63 | 71S/2 |
| 437 540 35 | 437 040 35 | 0,37 | 35,3 | 74 | 1,66 | 77 | 38 | 50 | 71L/4 |
| 437 540 46 | 437 040 46 | 0,37 | 46,2 | 61 | 2,65 | 59 | 29 | 63 | 71L/4 |
| 437 540 52 | 437 040 52 | 0,37 | 52,6 | 54 | 1,42 | 69 | 25,5 | 50 | 71L/4 |
| 437 540 70 | 437 040 70 | 0,37 | 70,3 | 36 | 1,26 | 49 | 39 | 40 | 71S/2 |
| 437 540 92 | 437 040 92 | 0,37 | 92,4 | 32 | 1,57 | 39 | 14,5 | 40 | 71L/4 |
| 437 541 05 | 437 041 05 | 0,37 | 105,4 | 27 | 1,49 | 43 | 26 | 40 | 71S/2 |
| 437 541 37 | 437 041 37 | 0,37 | 137,4 | 23 | 1,75 | 32 | 9,75 | 40 | 71L/4 |
| 437 542 10 | 437 042 10 | 0,37 | 210,8 | 15 | 2,04 | 26 | 13 | 40 | 71S/2 |
| 437 550 14 | 437 050 14 | 0,55 | 14,4 | 245 | 1,37 | 217 | 62 | 80 | 80L/6 |
| 437 550 17 | 437 050 17 | 0,55 | 17,6 | 210 | 0,97 | 236 | 51 | 63 | 80L/6 |
| 437 550 22 | 437 050 22 | 0,55 | 22,0 | 161 | 1,14 | 138 | 61 | 63 | 80S/4 |
| 437 550 26 | 437 050 26 | 0,55 | 26,3 | 147 | 1,32 | 153 | 51 | 63 | 80S/4 |
| 437 550 33 | 437 050 33 | 0,55 | 33,7 | 104 | 1,35 | 127 | 82 | 63 | 71L/2 |
| 437 550 35 | 437 050 35 | 0,55 | 35,3 | 110 | 1,12 | 114 | 38 | 50 | 80S/4 |
| 437 550 45 | 437 050 45 | 0,55 | 45,9 | 97 | 2,21 | 120 | 19,5 | 63 | 80L/6 |
| 437 550 52 | 437 050 52 | 0,55 | 52,6 | 81 | 0,96 | 102 | 25,5 | 50 | 80S/4 |
| 437 550 72 | 437 050 72 | 0,55 | 72,6 | 55 | 1,54 | 78 | 38 | 50 | 71L/2 |
| 437 550 92 | 437 050 92 | 0,55 | 92,4 | 49 | 2,24 | 58 | 14,5 | 50 | 80S/4 |
| 437 551 05 | 437 051 05 | 0,55 | 105,1 | 44 | 1,36 | 61 | 12,75 | 50 | 80S/4 |
| 437 551 41 | 437 051 41 | 0,55 | 141,5 | 31 | 1,41 | 53 | 19,5 | 40 | 71L/2 |
| 437 552 16 | 437 052 16 | 0,55 | 216,5 | 22 | 2,54 | 42 | 12,75 | 50 | 71L/2 |
| 437 560 14 | - | 0,75 | 14,5 | 333 | 1,01 | 330 | 62 | 80 | 90S/6 |
| 437 560 17 | 437 060 17 | 0,75 | 17,0 | 308 | 0,93 | 375 | 53 | 80 | 90S/6 |
| 437 560 21 | 437 060 21 | 0,75 | 21,7 | 234 | 1,25 | 252 | 62 | 80 | 80L/4 |
| 437 560 26 | 437 060 26 | 0,75 | 26,4 | 199 | 0,97 | 268 | 51 | 63 | 80L/4 |
| 437 560 34 | 437 060 34 | 0,75 | 34,5 | 159 | 1,17 | 211 | 39 | 63 | 80L/4 |
| 437 560 44 | 437 060 44 | 0,75 | 44,8 | 132 | 2,07 | 167 | 30 | 80 | 80L/4 |
| 437 560 53 | 437 060 53 | 0,75 | 53,5 | 102 | 1,39 | 202 | 51 | 63 | 80S/2 |
| 437 560 71 | 437 060 71 | 0,75 | 71,8 | 76 | 1,13 | 150 | 38 | 50 | 80S/2 |
| 437 560 92 | 437 060 92 | 0,75 | 92,9 | 69 | 2,38 | 103 | 14,5 | 63 | 80L/4 |
| 437 561 05 | 437 061 05 | 0,75 | 105,5 | 60 | 1,00 | 110 | 12,75 | 50 | 80L/4 |
| 437 561 41 | 437 061 41 | 0,75 | 141,6 | 46 | 1,94 | 82 | 9,5 | 50 | 80L/4 |
| 437 562 14 | 437 062 14 | 0,75 | 214,1 | 30 | 1,85 | 83 | 12,75 | 50 | 80S/2 |

Dimensions table page 747.

## Worm Geared Motors ZMD/I, Technical Data (Other Power Settings and Output Speeds On Request)

| Version A Output Side 5 Product No. | Version HL Product No. | $P_1$ kW | $n_2$ $min^{-1}$ | $T_{2\ nom.}$ Nm | $f_B$ | $T_{2A}$ Nm | $i_{ist}$ | Gearbox Size | Motor Size |
|---|---|---|---|---|---|---|---|---|---|
| **437 570 29** | **437 070 29** | 1,10 | 29,8 | 281 | 1,11 | 321 | 30 | **80** | 90L/6 |
| **437 570 33** | **437 070 33** | 1,10 | 33,8 | 262 | 0,99 | 362 | 26,5 | **80** | 90L/6 |
| **437 570 44** | **437 070 44** | 1,10 | 44,8 | 204 | 1,72 | 273 | 20 | **80** | 90L/6 |
| **437 570 52** | **437 070 52** | 1,10 | 52,3 | 174 | 1,42 | 246 | 26,5 | **80** | 90S/4 |
| **437 570 71** | **437 070 71** | 1,10 | 71,0 | 129 | 1,45 | 181 | 19,5 | **63** | 90S/4 |
| **437 570 92** | **437 070 92** | 1,10 | 92,3 | 103 | 2,65 | 142 | 15 | **80** | 90S/4 |
| **437 571 08** | **437 071 08** | 1,10 | 108,6 | 88 | 1,54 | 145 | 12,75 | **63** | 90S/4 |
| **437 572 78** | **437 072 78** | 1,10 | 278,9 | 34 | 2,65 | 95 | 9,5 | **50** | 80L/2 |
| **437 580 34** | **437 080 34** | 1,50 | 34,6 | 331 | 0,91 | 398 | 40 | **80** | 90L/4 |
| **437 580 46** | **437 080 46** | 1,50 | 46,2 | 256 | 1,05 | 308 | 30 | **80** | 90L/4 |
| **437 580 52** | **437 080 52** | 1,50 | 52,3 | 237 | 1,04 | 348 | 26,5 | **80** | 90L/4 |
| **437 580 69** | **437 080 69** | 1,50 | 69,3 | 184 | 1,67 | 262 | 20 | **80** | 90L/4 |
| **437 580 95** | **-** | 1,50 | 95,5 | 133 | 1,21 | 190 | 14,5 | **63** | 90L/4 |
| **437 581 40** | **437 081 40** | 1,50 | 140,3 | 91 | 2,06 | 153 | 20 | **80** | 90S/2 |

Dimensions table page 747.

## Note for Dimensioning

Three-phase motors have a very high starting torque $T_{2A}$.
The max. permissible, stability related torque of the gearbox is the product of output torque and operating factor: $T_{max.} = T_{2\ nom.} \times f_B$

This torque must never be exceeded.

Furthermore, depending on kind of operation,

factors for shock load and acceleration must be considered.

## Permissible Radial Loads $F_R$ [N] for Normal Output Shaft and Bearing System

The values for permissible radial loads stated in the table are calculated for the centre of the output shaft end, also calculating in the output speed and nominal output torque. The values were calculated for the most unfavourable load direction.

The permiss. radial loads only apply to unilateral load. If in your application high radial loads occur in combination with axial loads, we ask you to contact us.

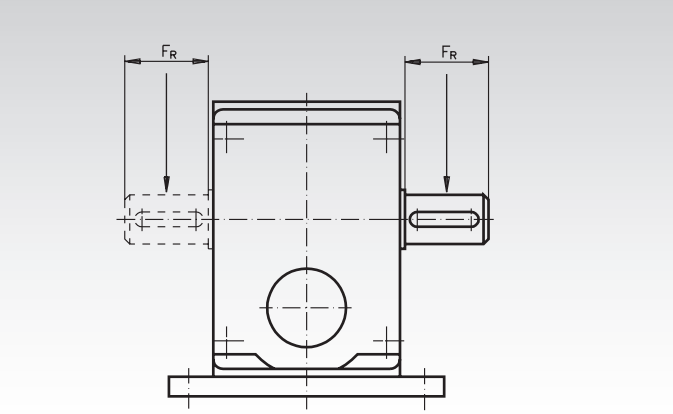


| Gearbox Size | Output Torque Nm | Permiss. Radial Load [N] at Output Speeds $n_2$ [$min^{-1}$] 6 | 8 | 10 | 12 | 16 | 20 | 25 | 32 | 40 | 50 | 63 | 80 | 100 | 125 | 160 | 200 | 250 | 320 |
|---|---|---|---|---|---|---|---|---|---|---|---|---|---|---|---|---|---|---|---|
| **40** | 0 - 80 | 2500 | 2375 | 2250 | 2125 | 2000 | 1875 | 1775 | 1675 | 1575 | 1400 | 1325 | 1250 | 1175 | 1125 | 1050 | 925 | 875 | 800 |
| **50** | 0 - 125 | 3500 | 3325 | 3150 | 2970 | 2800 | 2620 | 2480 | 2340 | 2200 | 1960 | 1850 | 1750 | 1640 | 1570 | 1470 | 1290 | 1220 | 1120 |
| | 125 - 160 | 3200 | 3040 | 2880 | 2720 | 2560 | 2400 | 2270 | 2140 | 2010 | 1790 | 1700 | 1600 | 1500 | 1440 | 1340 | 1180 | 1120 | 1020 |
| **63** | 0 - 200 | 5000 | 4750 | 4500 | 4250 | 4000 | 3750 | 3550 | 3350 | 3150 | 2800 | 2650 | 2500 | 2350 | 2250 | 2100 | 1850 | 1750 | 1600 |
| | 200 - 250 | 4600 | 4360 | 4140 | 3910 | 3680 | 3450 | 3260 | 3080 | 2900 | 2570 | 2440 | 2300 | 2160 | 2070 | 1930 | 1700 | 1610 | 1470 |
| | 250 - 320 | 3500 | 3325 | 3150 | 2975 | 2800 | 2625 | 2485 | 2345 | 2205 | 1960 | 1855 | 1750 | 1645 | 1575 | 1470 | 1295 | 1225 | 1120 |
| **80** | 0 - 500 | 7500 | 7120 | 6740 | 6370 | 6000 | 5620 | 5320 | 5000 | 4700 | 4200 | 4000 | 3750 | 3500 | 3370 | 3140 | 2770 | 2620 | 2400 |

## Dimensions Table Worm Geared Motors ZMD/I

Output flange and foot mounting brackets can be delivered at extra charge.

Position of terminal box: standard on top.

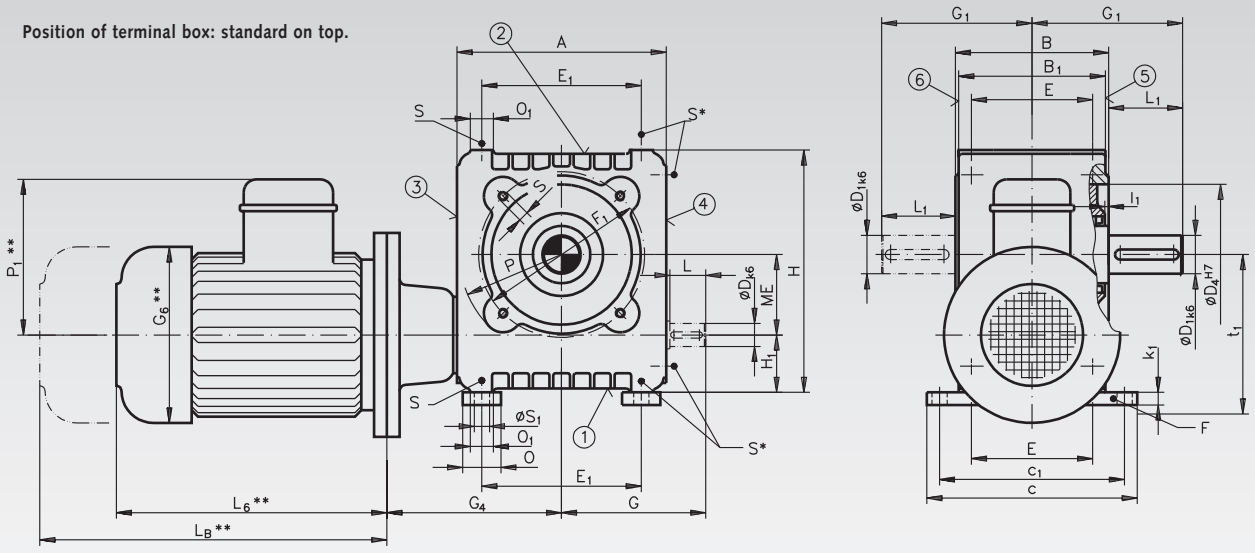


With Hollow Shaft

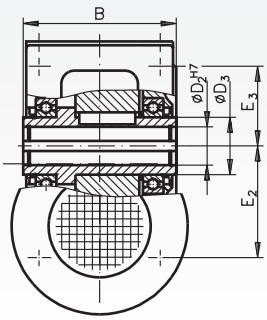


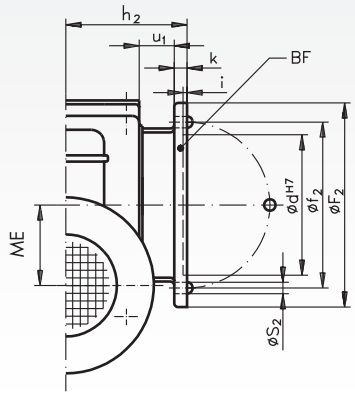


Flange Version

Surfaces (1) to (6) are all machined. Aapart from side (3), they can serve as mounting surfaces. The foot mountings F can be attached to surfaces (1), (2) and (4). Surfaces (5) and (6) serve to attach the flange BF. The geared motor can turn in any position. The required mounting position has to be stated in the order. Feather keys and grooves according to DIN 6885/1. Shaft ends with thread alignment according to DIN 332/2. As standard, the terminal box is mounted on side (2). It can be turned by 4x90°. On request, side (4) can accommodate the shaft end. The speed of this shaft end is equal to the speed of the motor.

## Gearbox – Dimensions

| Gearbox Size | ME mm | A mm | B mm | $B_1$ mm | c mm | $c_1$ mm | d mm | $D_4$ mm | D x L mm | $D_1$ x $L_1$ mm | $D_2$ mm | $D_3$ mm | E mm | $E_1$ mm | $E_2$ mm | $E_3$ mm | P mm | $F_2$ mm |
|---|---|---|---|---|---|---|---|---|---|---|---|---|---|---|---|---|---|---|
| **40** | 40 | 104 | 90 | 85 | 125 | 110 | 80 | 70 | 14 x 24 | 22 x 36 | 22 | 35 | 70 | 70 | 55 | 35 | 53 | 116 |
| **50** | 50 | 140 | 105 | 100 | 150 | 130 | 95 | 90 | 16 x 28 | 25 x 42 | 25 | 40 | 80 | 100 | 70 | 50 | 65 | 136 |
| **63** | 63 | 164 | 120 | 115 | 165 | 145 | 110 | 110 | 18 x 28 | 30 x 58 | 30 | 45 | 95 | 125 | 87,5 | 62,5 | 80 | 160 |
| **80** | 80 | 204 | 140 | 135 | 190 | 165 | 130 | 140 | 24 x 36 | 38 x 58 | 38 | 55 | 115 | 155 | 107,5 | 77,5 | 100 | 200 |

| Gearbox Size | $F_1$ mm | $f_2$ mm | G mm | $G_1$ mm | $G_4$ mm | $H_1$ mm | $h_2$ mm | H mm | i mm | l mm | k mm | $k_1$ mm | O mm | $O_1$ mm | S* mm | $S_1$ mm | $S_2$ mm | $t_1$ mm | $u_1$ mm |
|---|---|---|---|---|---|---|---|---|---|---|---|---|---|---|---|---|---|---|---|
| **40** | 85 | 100 | 79 | 81 | 89 | 32 | 70 | 124 | 3 | 3 | 8 | 8 | 25 | 14 | M6 x 12 | 10 | 7 | 80 | 17 |
| **50** | 110 | 115 | 100 | 94,5 | 118 | 40 | 80 | 160 | 3 | 3 | 8 | 10 | 30 | 18 | M8 x 14 | 12 | 9 | 100 | 19,5 |
| **63** | 130 | 130 | 113 | 118 | 137 | 45 | 95 | 190 | 3 | 3 | 10 | 10 | 30 | 18 | M8 x 14 | 12 | 9 | 118 | 25 |
| **80** | 165 | 165 | 141 | 128 | 164 | 55 | 110 | 237 | 3,5 | 3 | 12 | 12 | 35 | 22 | M10 x 17 | 15 | 11 | 147 | 28 |

* Threaded bores on side 4 at extra charge.

## Dimensions Table Worm Geared Motors ZMD/I

### Motor – Dimensions (mm)

| Gearbox Size | Motor Size | $G_6$* | $L_6$* | $L_B$* | $P_1$* |
|---|---|---|---|---|---|
| **40** | **63 S/L** | 123 | 188 | 238 | 113 |
| **40** | **71 S/L** | 138 | 212 | 272 | 122 |
| **50** | **71 S/L** | 138 | 212 | 272 | 122 |
| **50** | **80 S/L** | 156 | 234 | 299 | 141 |
| **63** | **71 S/L** | 138 | 212 | 272 | 122 |
| **63** | **80 S/L** | 156 | 234 | 299 | 141 |
| **63** | **90 S** | 176 | 251 | 311 | 149 |
| **63** | **90 L** | 176 | 276 | 356 | 149 |
| **80** | **80 S/L** | 156 | 234 | 299 | 141 |
| **80** | **90 S** | 176 | 251 | 311 | 149 |
| **80** | **90 L** | 176 | 276 | 356 | 149 |

* Dimensions may be subject to change.

### Three-Phase Motors

The following single-phase motors conform to DIN IEC 34-1.
**From 0.75 kW in efficiency class IE2.**
Other types (dual-speed, one-phase AC, brake motors) on request. The nominal power is calculated for continuous operation, operation mode S1, at nominal voltage and nominal speed calculated for a max. temperature of the cooling agent of 40°C and an altitude of 1,000 m above sea level.
The motors are supplied with a normal voltage of 230/400 V (permiss. voltage fluctuation +6% and -10%). Other voltages and frequencies available on request.

| Size | Nominal Power kW | Nominal Speed $min^{-1}$ | Nominal Current at 230/400 V A | Power Factor cos φ | Nominal Torque Nm | Starting Torque to nom. Torque $M_A/M_N$ | Starting Current to nom. Current $I_A/I_N$ |
|---|---|---|---|---|---|---|---|
| | | | **3000 $min^{-1}$** | | | | |
| **63S/2** | 0,18 | 2710 | 0,97/0,56 | 0,79 | 0,63 | 2,4 | 3,5 |
| **63L/2** | 0,25 | 2715 | 1,22/0,77 | 0,82 | 0,86 | 2,5 | 3,8 |
| **71S/2** | 0,37 | 2740 | 1,72/0,99 | 0,84 | 1,26 | 2,2 | 3,9 |
| **71L/2** | 0,55 | 2745 | 2,46/1,42 | 0,83 | 1,9 | 2,4 | 4,2 |
| **80S/2** | 0,75 | 2730 | 3,53/2,04 | 0,80 | 2,6 | 4,4 | 8,3 |
| **80L/2** | 1,1 | 2735 | 4,76/2,75 | 0,83 | 3,76 | 3,8 | 7,0 |
| **90S/2** | 1,5 | 2805 | 6,1/3,51 | 0,85 | 5,1 | 4,1 | 7,0 |
| | | | **1500 $min^{-1}$** | | | | |
| **63S/4** | 0,12 | 1335 | 0,9/0,52 | 0,64 | 0,84 | 2,3 | 2,5 |
| **63L/4** | 0,18 | 1315 | 1,3/0,75 | 0,67 | 1,26 | 2,2 | 2,5 |
| **71S/4** | 0,25 | 1365 | 1,4/0,83 | 0,72 | 1,7 | 2,0 | 3,1 |
| **71L/4** | 0,37 | 1340 | 1,9/1,11 | 0,76 | 2,5 | 1,8 | 3,1 |
| **80S/4** | 0,55 | 1340 | 2,8/1,6 | 0,77 | 3,8 | 1,75 | 3,1 |
| **80L/4** | 0,75 | 1345 | 3,6/2,1 | 0,77 | 5,2 | 4,0 | 5,8 |
| **90S/4** | 1,1 | 1385 | 4,8/2,85 | 0,78 | 7,5 | 3,1 | 6,4 |
| **90L/4** | 1,5 | 1385 | 6,4/3,7 | 0,80 | 10,1 | 3,6 | 6,7 |
| | | | **1000 $min^{-1}$** | | | | |
| **63L/6** | 0,12 | 845 | 1,1/0,6 | 0,65 | 1,29 | 1,9 | 1,9 |
| **71S/6** | 0,18 | 885 | 1,3/0,75 | 0,68 | 1,94 | 1,6 | 2,4 |
| **71L/6** | 0,25 | 890 | 1,6/0,95 | 0,69 | 2,58 | 1,7 | 2,6 |
| **80S/6** | 0,37 | 900 | 2,1/1,2 | 0,71 | 3,84 | 1,8 | 3,1 |
| **80L/6** | 0,55 | 895 | 2,85/1,65 | 0,74 | 5,71 | 1,8 | 3,2 |
| **90S/6** | 0,75 | 900 | 4,1/2,35 | 0,70 | 7,83 | 3,0 | 4,4 |
| **90L/6** | 1,1 | 895 | 5,7/3,3 | 0,71 | 11,5 | 3,7 | 5,7 |

Discontinued

Product Line

deleted

Discontinued

Product Line

deleted

Discontinued

Product Line

deleted

Discontinued

Product Line

deleted

## Continuously Variable Geared Motors MUN/I

- Motor 230/400 V, 50 Hz.
- Input power 0,18 kW.
- Output torque to 70 Nm.
- Output speed 0.17 to 4200 $min^{-1}$
- Adjustment range 1 : 9.
- Adjustable with motor stopped.
- Constant speed, smooth running, long life time and high efficiency.
- Lubricated for life, thus maintenance free.
- Can be mounted in any position (apart from Size 250 and 260).

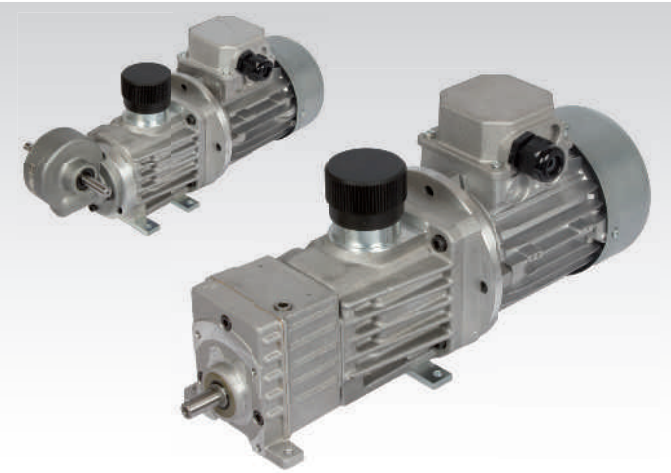

### Working Principle

Two axially-parallel hollow-cone disks are mounted, with pre-tension, around a steel ball. The ball rolls, at almost punctiform point of contact, over the hollow-cone disks and transfers the power from the input shaft - maintaining the sense of rotation - onto the output shaft. The system works at both rotational directions. A slidable ball track on the control device continuously changes the transmission ratio between input and output shaft. This allows a adjustment range from 3 : 1 to 1 : 3, i.e. a total value of R = 9. The adjustment of the speed is done with an adjustment screw. To pass through the entire adjustment range 10 full turns are required.

### Attachments for the Input Side

Attached Motor
The input is done by a B14 standard motor. As standard, 4-pole, three-phase motors, three-phase explosion proof or one-phase AC motors are used. The motor dimensions stated in the dimensions tables refer to three-phase standard motors.
Attention
When three-phase explosion proof or one-phase AC motors are used, the overall dimensions change. Please ask for the respective dimensions tables!

### Attachments for the Output Side

To adjust the output speeds to the specific circumstances the following can be mounted:
- Helical gear unit, 1 to 7 stage.
- Helical and, on request, bevel gear units.
- Worm gear units.

### Standard Adjustment Device

To pass through the entire adjustment range 10 full turns of the handwheel are required. The adjusting collar is marked with a linear scale of 1 - 10, which is however not directly connected to the output speed, as the adjustment graph shows an almost logarithmic curve progression.

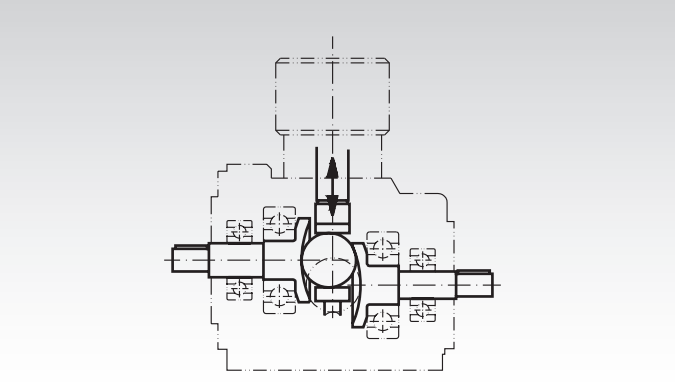

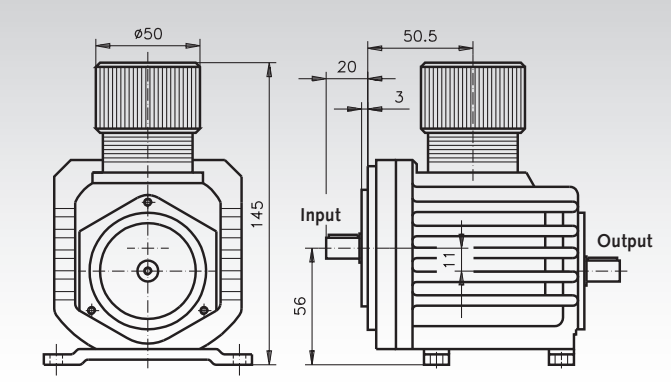

## Version B: Input Power 0,18 kW, Variable Range 1 : 9

Ordering details: z. B.:
Type, Version, Output Speed, Product No.

| Product No. | Output Speeds $n_2$ at $n_1$ = 1400 $min^{-1}$ $min^{-1}$ | Output Torque $M_2$ Nm | Size | Gear Ratio i | Dimensional Drawing | Weight kg |
|---|---|---|---|---|---|---|
| 450 202 00 | 155 - 1400 | 2,5 - 0,75 | 21 | 3 | 2 | 6,8 |
| 450 202 01 | 92 - 824 | 4,3 - 1,3 | 21 | 5,1 | 2 | 6,8 |
| 450 202 02 | 71 - 640 | 5,6 - 1,7 | 21 | 6,6 | 2 | 6,8 |
| 450 203 00 | 58 - 522 | 6,6 - 2,0 | 22 | 8,0 | 3 | 7,3 |
| 450 203 01 | 34 - 306 | 11,2 - 3,3 | 22 | 13,7 | 3 | 7,3 |
| 450 203 02 | 26 - 234 | 14,6 - 4,3 | 22 | 17,8 | 3 | 7,3 |
| 450 206 00 | 22 - 194 | 17,2 - 5,1 | 239 | 21,6 | 4 | 7,8 |
| 450 205 00 | 16,5 - 149 | *10 - 6,7 | 24 | 28 | 5 | 6,7 |
| 450 206 01 | 12,6 - 113 | 29 - 8,5 | 239 | 37 | 4 | 7,8 |
| 450 205 02 | 10,8 - 97 | *10 - *10 | 24 | 43 | 5 | 6,7 |
| 450 206 02 | 9,7 - 87 | *30 - 11,5 | 239 | 48 | 4 | 7,8 |
| 450 205 03 | 9 - 81 | *10 - *10 | 24 | 51,3 | 5 | 6,7 |
| 450 207 01 | 4,7 - 42 | *30 - 23 | 249 | 100 | 4 | 7,8 |
| 450 207 02 | 3,5 - 31 | *30 - *30 | 249 | 130 | 4 | 7,8 |
| 450 209 00 | 3 - 27 | *30 - *30 | 259 | 158 | 4 | 7,9 |
| 450 213 01 | 1,7 - 15 | *70 - 64 | 250 | 272 | 6 | 9,5 |
| 450 213 02 | 1,3 - 12 | *70 - *70 | 250 | 353 | 6 | 9,5 |
| 450 212 01 | 0,63 - 5,7 | *70 - *70 | 260 | 735 | 6 | 9,7 |
| 450 214 00 | 0,48 - 4,3 | *30 - *30 | 269 | 955 | 4 | 7,9 |
| 450 215 00 | 0,46 - 4,16 | *10 - *10 | 27 | 1006 | 5 | 6,8 |
| 450 215 01 | 0,30 - 2,7 | *10 - *10 | 27 | 1540 | 5 | 6,8 |
| 450 215 02 | 0,17 - 1,5 | *10 - *10 | 27 | 2806 | 5 | 6,8 |

*Constructive speed limit of the tranmission gearing. Dimensional drawings page 755.

## Version E: Input Power 0,18 kW, Variable Range 1 : 9 with Worm Gear Units

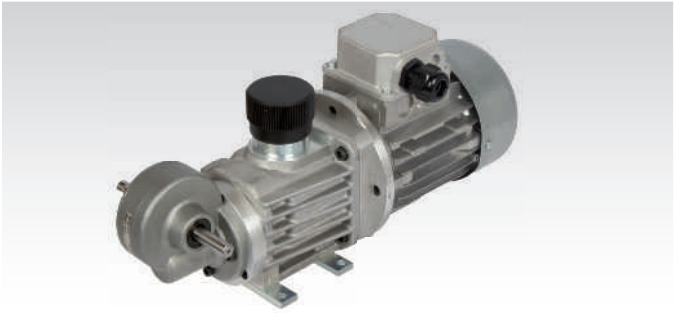

Ordering details: z. B.:
Type, Version, Output Speed, Product No.

| Product No. | Output Speeds $n_2$ at $n_1$ = 1400 $min^{-1}$ $min^{-1}$ | Output Torque $M_2$ Nm | Size | Gear Ratio i | Dimensional Drawing | Weight kg |
|---|---|---|---|---|---|---|
| 450 501 00 | 92 - 830 | 2,9 - 0,87 | 2S1 | 5 | 9 | 6,7 |
| 450 501 01 | 67 - 600 | 4,1 - 1,2 | 2S1 | 7 | 9 | 6,7 |
| 450 501 02 | 47 - 420 | 5,4 - 1,6 | 2S1 | 10 | 9 | 6,7 |
| 450 501 04 | 31 - 280 | 8,1 - 2,4 | 2S1 | 15 | 9 | 6,7 |
| 450 501 05 | 26 - 233 | 8,1 - 2,4 | 2S1 | 18 | 9 | 6,7 |
| 450 501 06 | 19 - 174 | *9,2 - 2,9 | 2S1 | 24 | 9 | 6,7 |
| 450 501 08 | 15 - 135 | *10,3 - 3,2 | 2S1 | 30 | 9 | 6,7 |
| 450 501 09 | 12 - 108 | *11,4 - 4,1 | 2S1 | 38 | 9 | 6,7 |
| 450 501 10 | 8,5 - 76 | *10,4 - 4,5 | 2S1 | 55 | 9 | 6,7 |
| 450 501 12 | 6,2 - 56 | *7,3 - 5,1 | 2S1 | 75 | 9 | 6,7 |

*Constructive speed limit of the tranmission gearing. Dimensional drawings page 755.

## Model B3, Feather Key according to DIN 6885/1 (all Dimensions in mm)

### Dimens. No. 2

Size 21

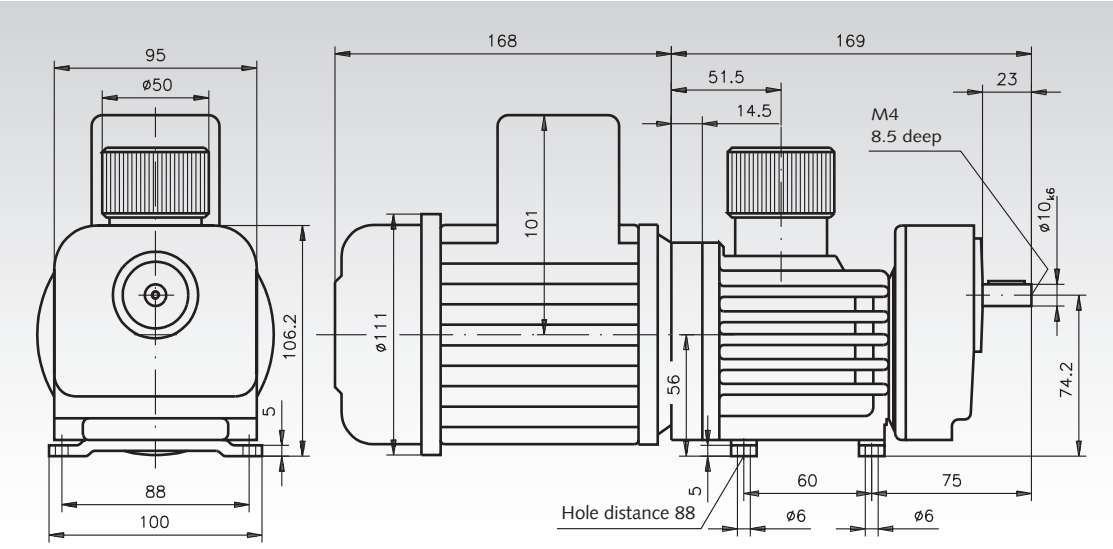


### Dimens. No. 3

Size 22

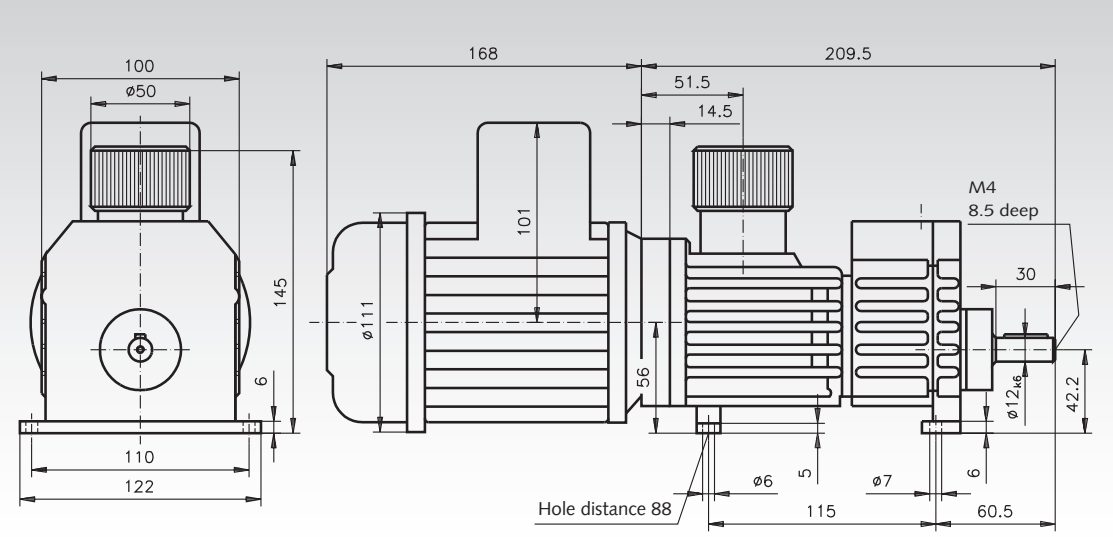


### Dimens. No. 4

Size 239 - 269

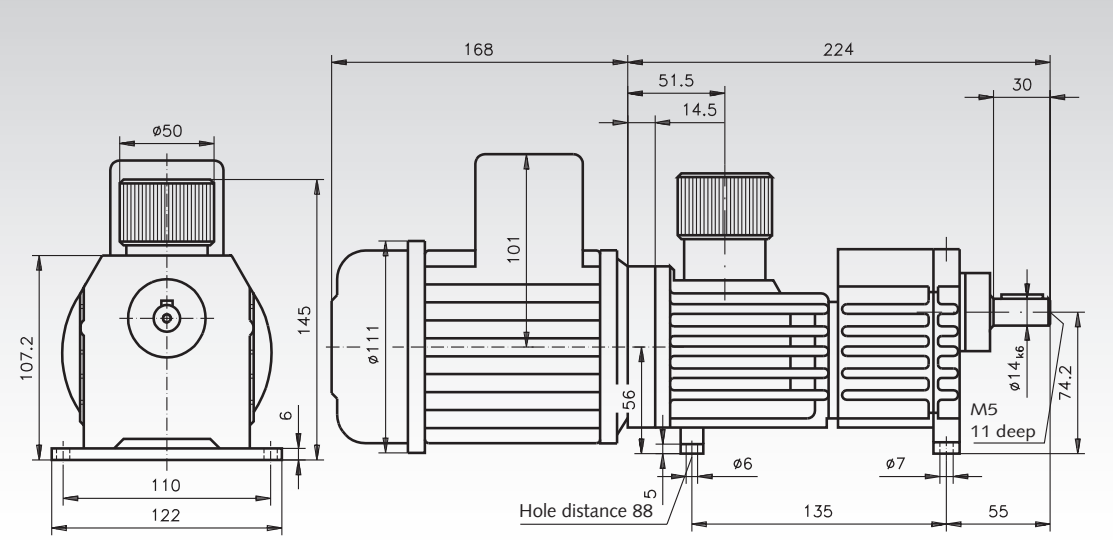

## Model B3, Feather Key according to DIN 6885/1 (all Dimensions in mm)

### Dimens. No. 5

Size 24 + 27

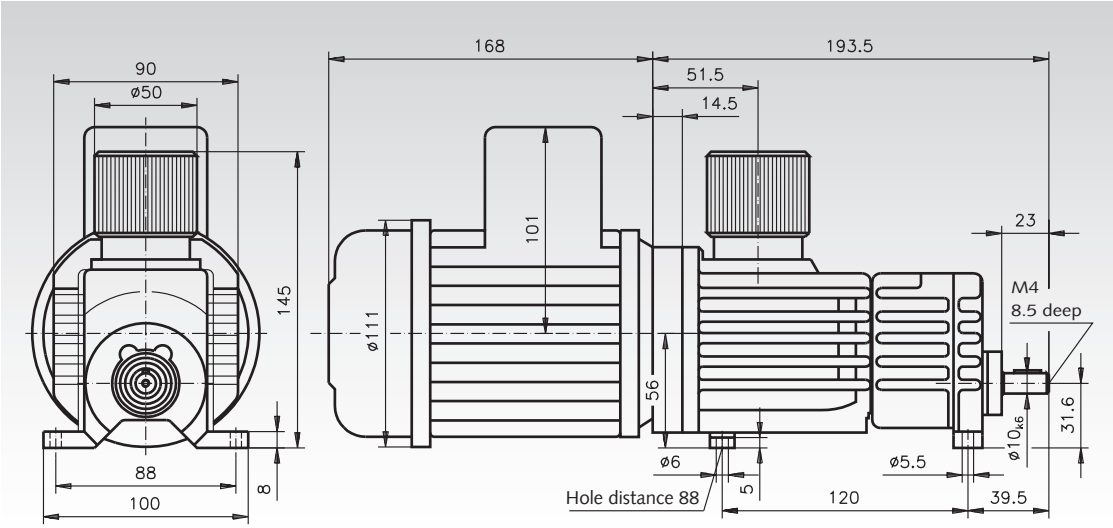


### Dimens. No. 6

Size 250 + 260

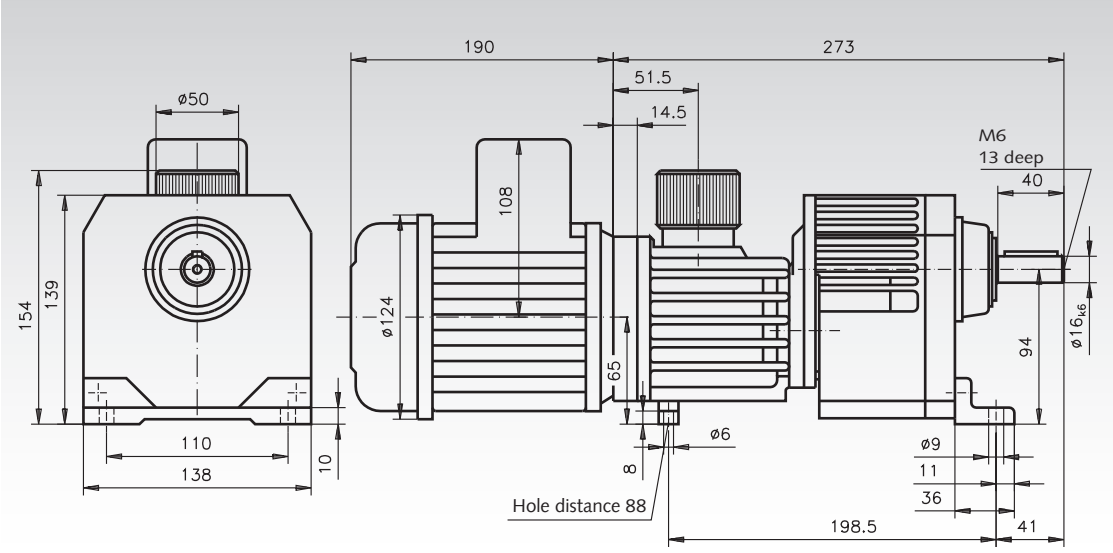


### Dimens. No. 9

Size 2S1

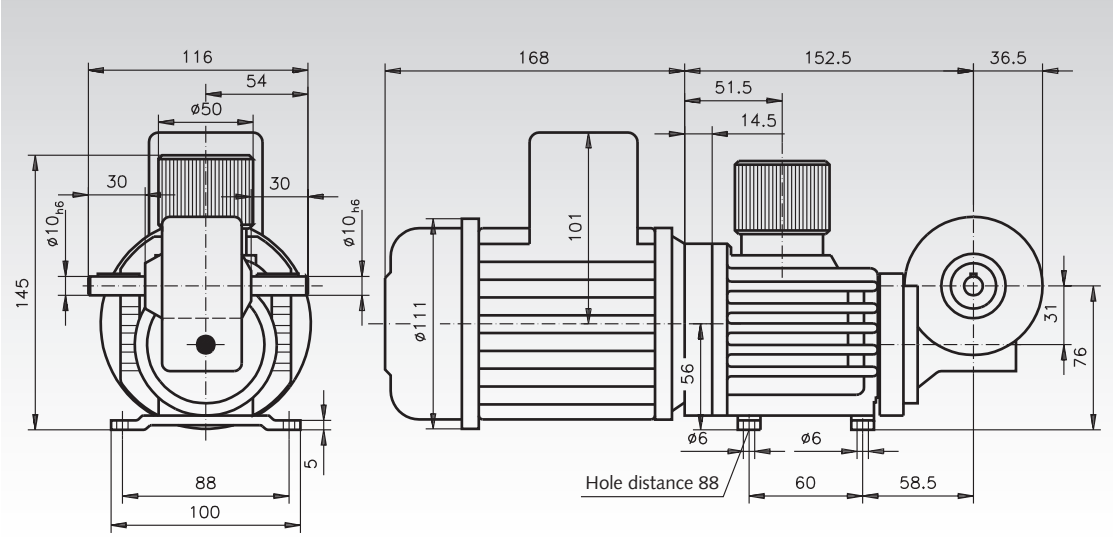

# www.maedler.de

## ...the entire MÄDLER® range with CAD files on the Internet

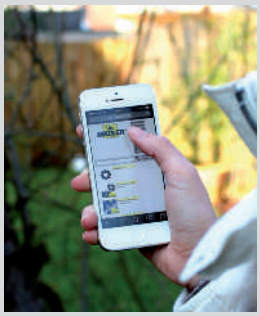

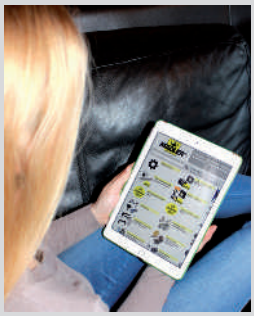

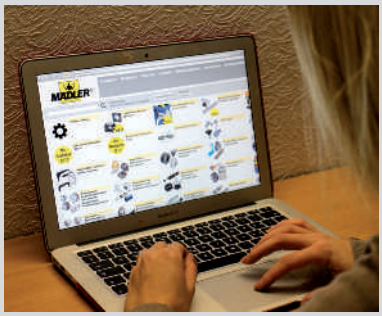

We present the entire ***MÄDLER***® range with CAD files and ***MÄDLER***® info, continuously updated, on the internet. Fast access to the data, fast ordering by internet.
Orders by internet, phone, fax or e-mail: We guarantee delivery at short notice.

Dimensions and other information in this catalogue display the current state of technology. We reserve the right for changes.
This catalogue was created with due diligence, but errors might still occur. We refuse to accept any claims in this respect. We reserve the right to alter dimensions, and to change or remove single products and product groups without prior notice. Our general conditions of sales, delivery and payment can be found on the last page of this catalogue.

## ...we keep things moving

## Linear Actuator Systems GR/I

**General description:**
Linear actuator, control box and hand operator make a ready-to-operate linear drive.
Voltage supply 230V or 24V on choice.
Up to 4 linear actuators can be operated with only one hand operator.
**Usage:** Universal use, for operating windows, gates, and for many other processes with swivel motion or linear motion.

**Linear actuators, control box and hand operator have to be ordered separately.**

## Linear Actuators GR/I

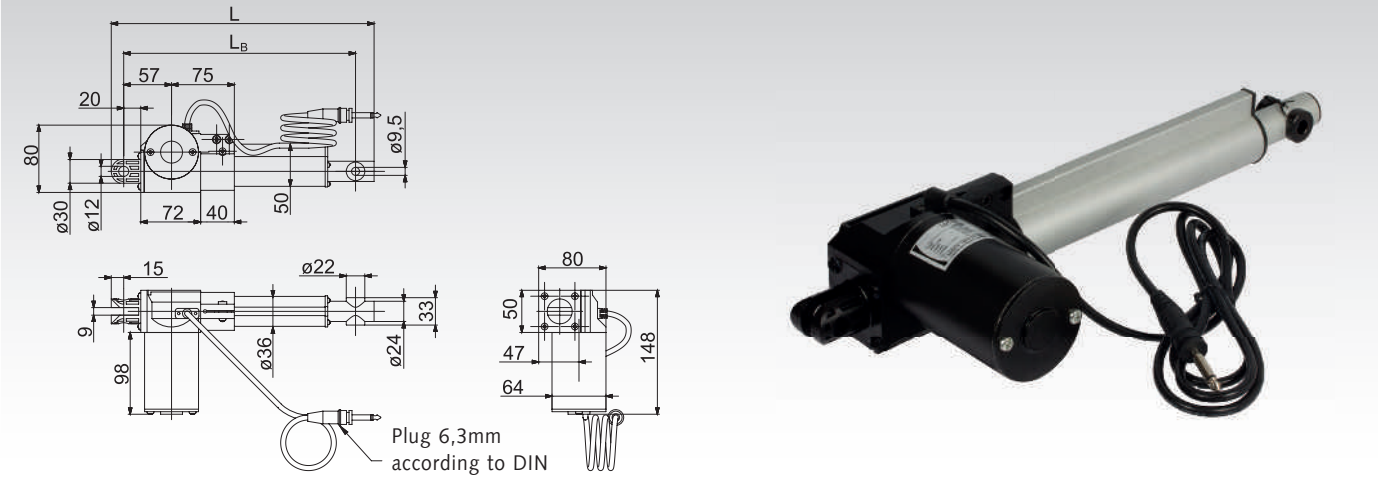


2 speeds.
8 stroke lengths. Other lengths in 50mm steps on request.
To be used with 230V AC or 24V DC-control box.
Motor voltage 24V DC. Protection class IP 43. Cabel length approx. 1,2 m.
Up to 4 actuators can be operated separately with only one hand operator.
Linear actuators, control box and hand operator have to be ordered separately.

**Ordering details: e.g.: Prod.-No. 475 130 10, Linear actuator 5 mm/sec, stroke 100 mm**

| Product No. | Speed mm/sec | Stroke length mm | max. Load tensil *L N | max. Load compressing * N | Length mm | Hole distance $L_B$ mm | Weigth kg |
|---|---|---|---|---|---|---|---|
| **475 130 10** | 5 | 100 | 6000 | 6000 | 315 | 275 | 1,98 |
| **475 130 20** | 5 | 200 | 6000 | 6000 | 415 | 375 | 2,12 |
| **475 130 30** | 5 | 300 | 6000 | 3900 | 515 | 475 | 2,40 |
| **475 130 40** | 5 | 400 | 6000 | 2300 | 615 | 575 | 2,62 |
| **475 130 50** | 5 | 500 | 6000 | 1500 | 715 | 675 | 2,78 |
| **475 130 60** | 5 | 600 | 6000 | 1100 | 815 | 775 | 2,98 |
| **475 130 80** | 5 | 800 | 6000 | 610 | 1015 | 975 | 3,40 |
| **475 131 00** | 5 | 1000 | 6000 | 400 | 1215 | 1175 | 3,80 |
| **475 140 10** | 20 | 100 | 2000 | 2000 | 315 | 275 | 1,98 |
| **475 140 20** | 20 | 200 | 2000 | 2000 | 415 | 375 | 2,12 |
| **475 140 30** | 20 | 300 | 2000 | 1300 | 515 | 475 | 2,40 |
| **475 140 40** | 20 | 400 | 2000 | 766 | 615 | 575 | 2,62 |
| **475 140 50** | 20 | 500 | 2000 | 509 | 715 | 675 | 2,78 |
| **475 140 60** | 20 | 600 | 2000 | 366 | 815 | 775 | 2,98 |
| **475 140 80** | 20 | 800 | 2000 | 202 | 1015 | 975 | 3,40 |
| **475 141 00** | 20 | 1000 | 2000 | 133 | 1215 | 1175 | 3,80 |

* Static and dynamic.

## Control Boxes for Linear Actuators GR/I

**Material:** Housing in shock resistant, black plastic.

For voltage supply and processing the actuators.
On choice for 230V AC or 24V DC.
On choice for 1 actuator, 2 actuators or up to 4 actuators.
Limit switch and overload protection are integrated.
230V-version with IEC power cord with plug, cable length approx. 2.5 m.
24V-version with 2 m-connecting cable.
Protection class IP 43.

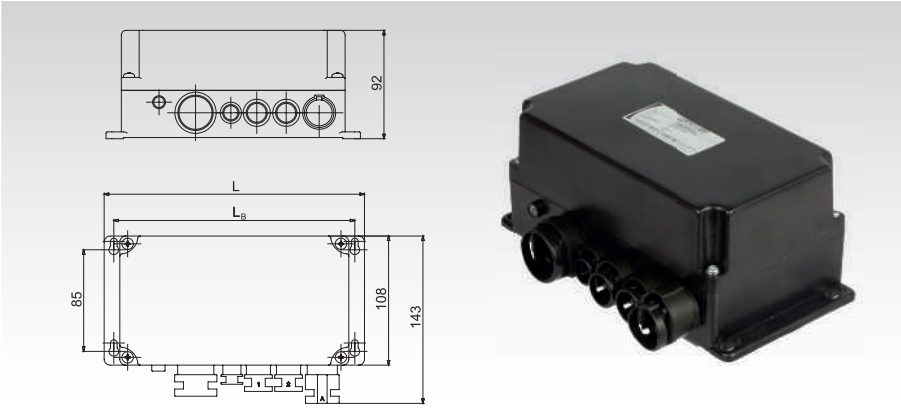


**Ordering details: e.g.: Prod.-No. 475 190 01, control box 230V for 1 actuator**

| Product No. | Voltage supply | Suitable for | Length L mm | Distance $L_B$ mm | Weight kg |
|---|---|---|---|---|---|
| **475 190 01** | 230V AC | 1 actuator | 216 | 200 | 1,60 |
| **475 190 02** | 230V AC | 1-2 actuators | 216 | 200 | 1,66 |
| **475 190 04** | 230V AC | 1-4 actuators | 320 | 306 | 1,98 |
| **475 191 01** | 24V DC | 1 actuator | 216 | 200 | 0,80 |
| **475 191 02** | 24V DC | 1-2 actuators | 216 | 200 | 0,86 |
| **475 191 04** | 24V DC | 1-4 actuators | 320 | 306 | 1,18 |

## Hand Operators for Linear Actuators GR/I

**Material:** Housing in shock resistant, black plastic.

For operating the linear actuators.
To be used with 230V AC or 24V DC control box.
On choice for 1 actuator, 2 actuators or up to 4 actuators.
The actuators can be operated separately by holding down the key.
With spiral cable, length 1m, tensiled approx. 2m.
Protection class IP 54.

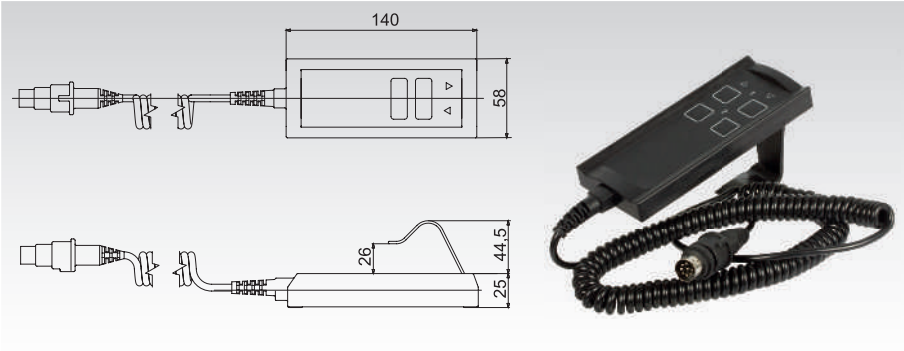


**Ordering details: e.g.: Prod. No. 475 192 01, Hand operator for 1 actuator**

| Product No. | Suitable for | Number of Keys | Weight kg |
|---|---|---|---|
| **475 192 01** | 1 actuator | 1 pair of keys | 0,20 |
| **475 192 02** | 1-2 actuators | 2 pair of keys | 0,22 |
| **475 192 04** | 1-4 actuators | 4 pair of keys | 0,24 |

***Alternatively to the Hand Operator: Connecting cable for customer`s controller.***

## Linear Drives (lifting devices) SFL 12 V - 24 V

**Housing:** Motor: Steel, zinc-plated. Gearbox: Aluminium.
Can be mounted in any position.
**Gearbox:** Metal gears, trapezoidal thread nuts made from plastic.
**Bearing:** Plain bearings.
**Lubrication:** Spindle nut must be greased by the customer.
**Motor:** DC motor 12 V or 24 V switching voltage, interference-free.
Change the direction of rotation by switching the polarity.
Protection class acc. to EN 60529: IP 30. Operating mode as per VDE 0530: S2.

Universal use linear drives, e.g. for actuating devices.
Either with or without Hall-IC for positioning, end position limit or speed control. For Spindle Tr. 10 x 3 mm.
The required spindle length depends on the required stroke length.
The spindles have to be ordered separately. Mounting eye and stop block qfor spindle ends are included with the linear drive.

**Ordering Details: e.g.: 1 Piece Product No. 475 201 01, Linear Drive 1000N without Hall IC (Spindles have to be ordered separately).**

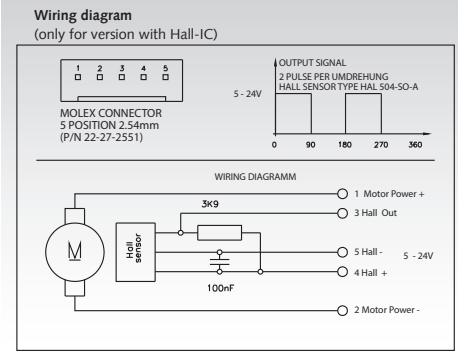


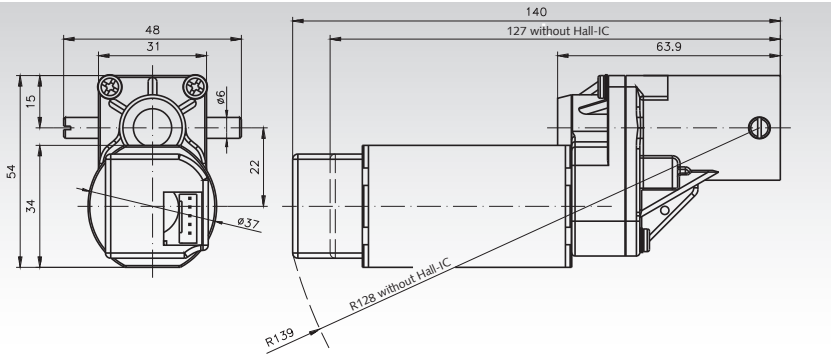


| Product No. without Hall-IC | Product No. with Hall-IC | F Nom 1) N | I Nom 2) A | 12 Volt-Operation F max 3) N | V 4) mm/s | ED 5) % | 24 Volt-Operation F max 3) N | V 4) mm/s | ED 5) % | ratio i | Hall Pulses per linear motion puls/mm | Weight g |
|---|---|---|---|---|---|---|---|---|---|---|---|---|
| **475 201 01** | **475 201 11** | 1000 | 1,0 | - | - | - | 1700 | 5,0 | 70 | 50:1 | 33,3 | 500 |
| **475 201 02** | **475 201 12** | 1200 | 3,2 | 600 | 5,0 | 50 | 2100 | 10,0 | 30 | 50:1 | 33,3 | 500 |
| **475 201 03** | **475 201 13** | 400 (200)* | 1,5 (0,95)* | 300 | 8,6 | 80 | 700 | 18,5 | 50 | 12:1 | 8,0 | 500 |
| **475 201 04** | **475 201 14** | 400 | 3,6 | 600 | 20,0 | 50 | 800 | 40,0 | 30 | 12:1 | 8,0 | 500 |

1) Nominal lifting power. 2) Nominal current. 3) Maximum lifting power. 4) Idle speed. 5) Maximum duty cycle.
* Datas in brackets are valid for 12V-Operation.

*Speed controllers Page 696*

## Connecting Cable for Linear Drives with Hall-IC

**Product No. 475 201 10** Connecting cable with one Molex plug for linear drives SFL with Hall-IC, length 500mm

## Note

All values are averages, measured with the motor cold. Deviations of 10% are possible. To prevent the gearbox from being overloaded, the stated limit loads must not be exceeded.
**Important: The thread of the spindle nut has to be greased by the customer!**

## Factory interference suppression

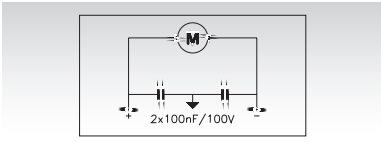


## Spindles for linear drives (lifting devices) SFL

**Material:** Choice of C15 Steel or Stainless Steel 1.4305.

STAINLESS

**Design:** Either ready-to –use for 300mm stroke lengths or by the metre for further processing by the customer.
**Caution:** Due to kinking, the max stroke length under compressive loads is limited to 300 mm.
The spindle has to be adequately lubricated before screwing in and operating (with normal machine grease).
Mounting eye and stop block are included with the linear drive.

**Ordering Details: e.g.: 1 Piece Spindle Product No. 475 201 30 for stroke lengths 300mm**

| Product No. | Length mm | Material | Weight g | Design |
|---|---|---|---|---|
| **475 201 30** | 383 | Steel C15 | 230 | Ready-to-Install. For stroke lengths 300mm. |
| **640 010 00** | 1000 | Steel C15 | 600 | Sold by the metre, for further processing by the customer. |
| **640 990 10** | 1000 | Stainless Steel | 600 | Sold by the metre, for further processing by the customer. |

# Lifting Devices & complete Systems

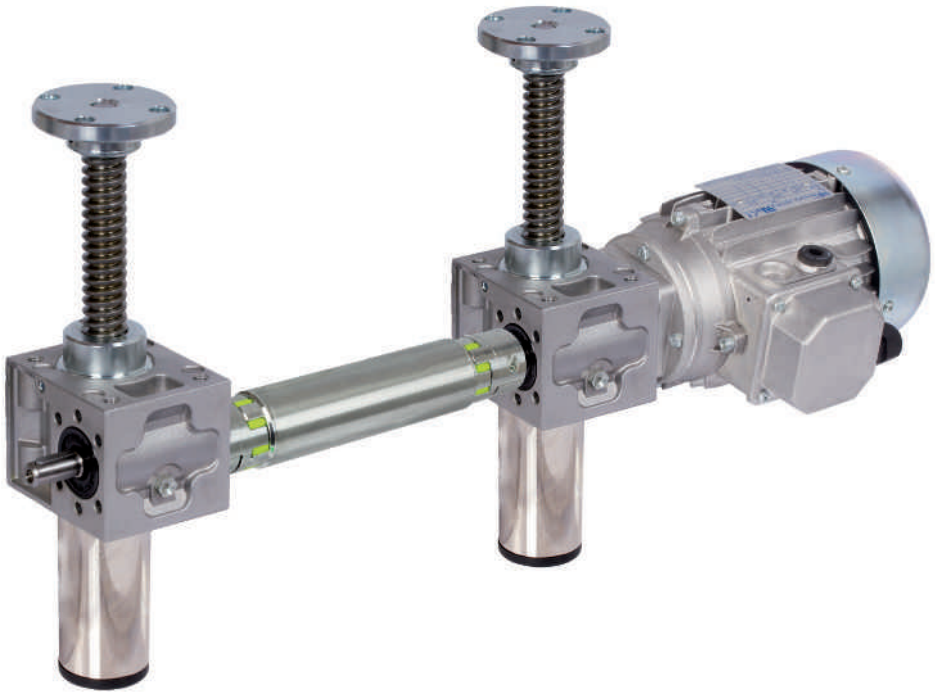

***MÄDLER®*** is not only a supplier for single screw jack gearboxes and motors. We also deliver complete lifting systems, ready to install.

- Screw jacks with cube housing.
- Screw jacks with classic housing.
- Safety nuts.
- Foot mounted motors (B3).
- Face-mounted motors (B14) with adaptor and elastic coupling.
- Backlash-free couplings.
- Bevel gearboxes.
- Connecting shafts.
- Additional parts ( bellows, flange plates, hand wheels,etc).

Actuators, control boxes and hand operators have to be ordered seperately.

**Ready assembled according your wishes!**

## Worm Gear Screw Jacks NP/I

**Housing:** Up to size 3 made from aluminium alloy in die-cast version. Size 4 made from grey or spheroidal cast iron. All sides machined. As standard filled with lubricant.

**Gearing:** Worm made from ETG100, Gear made from Gbz12. Self-locking to a certain extend. Vibration, an increase in the spindle pitch or the use of rolling screw elements release the self-locking. In this case, e.g., a brake motor should be included in the system. For lower stroke speeds, worm gear sets with higher transmission ratios can be supplied on request.

**Spindle:** Material C15, from size 4 C45. On request also available as left-hand, stainless steel or ball screw version.

**Protective sleeve:** The versions A and B are, unless stated otherwise in the order, supplied with a protective sleeve.

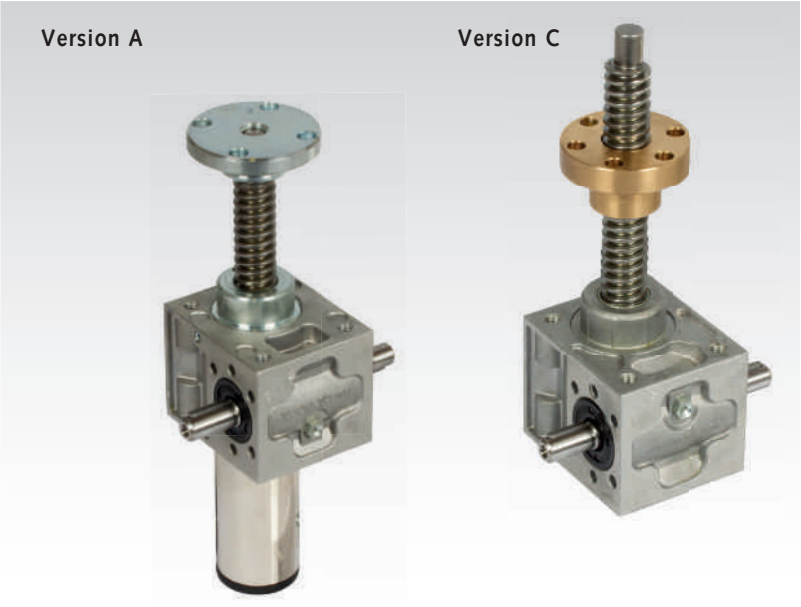


## Versions

**Version A:** With this standard version the threaded spindle moves 1 mm in axial direction with every full rotation of the worm shaft. The spindle has to be secured against twisting.

**Version B:** Is the same as version A, but inside the gear unit a groove secures the spindle over its entire length against twisting. Thus the load can simply be applied.

**Version C:** In this version the spindle is fixed to the worm gear. The axial movement is taken over by the threaded nut running outside the gear unit (also 1 mm stroke per full rotation of the worm shaft).

Versions A and B are avaliable with an optional spindle end safety feature. This means the threaded spindle is locked before the safety sleeve is mounted, to limit the stroke in extended position so that the spindle cannot be screwed out of the gear unit. Attention: this safety feature means the safety sleeve is by about 20 mm longer.

**The product numbers below only refer to the basic gear units without spindle. Please ask for the price of the complete unit including spindle and accessories as, e.g., flange plate/travelling nut, bellow or coil spring cover, fastening strips. On request a version for lower stroke speed can be supplied.**

## Technical Data and Dimensions Tables

**Version A:** Standard version.

**Version B:** With anti-rotation guide.

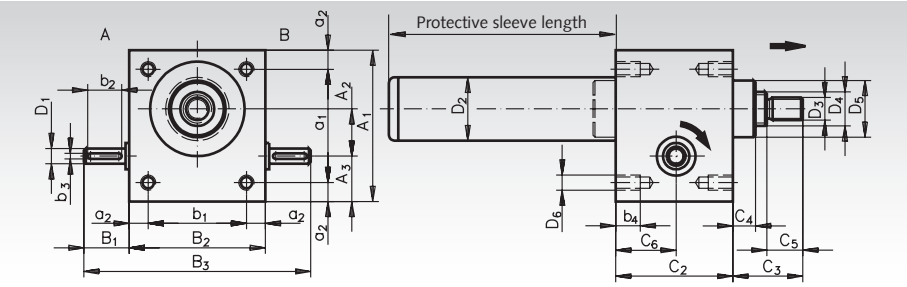


**Ordering details: e.g.: Prod. No. Type, Size, Stroke Length, accessories**

| Product No. Vers. A | Product No. Vers. B | Size | max. Stroke Force N | $D_4$ Spindle | Efficiency % | Stroke[1] mm | MD[2] Nm | $A_1$ mm | $A_2$ mm | $A_3$ mm | $a_1$ mm | $a_2$ mm | $B_1$ mm | $B_2$ mm | $B_3$ mm |
|---|---|---|---|---|---|---|---|---|---|---|---|---|---|---|---|
| **475 000 00** | **475 006 00** | 0 | 2500 | Tr.16x4 | 33 | 1 | 1,5 | 64 | 22,62 | 17,38 | 48 | 8 | 20 | 54 | 94 |
| **475 001 00** | **475 011 00** | 1 | 5000 | Tr.18x4 | 33 | 1 | 3,2 | 80 | 25 | 24 | 60 | 10 | 24 | 72 | 120 |
| **475 002 00** | **475 012 00** | 2 | 10000 | Tr.20x4 | 31 | 1 | 7 | 100 | 32 | 28 | 78 | 11 | 27,5 | 85 | 140 |
| **475 003 00** | **475 013 00** | 3 | 25000 | Tr.30x6 | 31 | 1 | 16 | 130 | 45 | 31 | 106 | 12 | 45 | 105 | 195 |
| **475 004 00** | **475 014 00** | 4 | 50000 | Tr.40x7 | 28 | 1 | 34 | 180 | 63 | 39 | 150 | 15 | 47,5 | 145 | 240 |

| Size | $b_1$ mm | $b_2$ mm | $b_3^{P9}$ mm | $b_4$ mm | $C_2$ mm | $C_3$ mm | $C_4$ mm | $C_5$ mm | $C_6$ mm | $D_1^{h6}$ mm | $D_2$ mm | $D_3$ mm | $D_5$ mm | $D_6$ mm | Protective Sleeve[3] mm | Weight[4] kg |
|---|---|---|---|---|---|---|---|---|---|---|---|---|---|---|---|---|
| **0** | 38 | 16 | 3 | 11 | 50 | 30 | 12 | 15 | 25 | 9 | 33,5 | M10 | 30 | M6 | Stroke +20 (45) | 0,6 |
| **1** | 52 | 18 | 3 | 13 | 62 | 35 | 12 | 19 | 32 | 10 | 33,5 | M12 | 30 | M8 | Stroke +20 (48) | 1,2 |
| **2** | 63 | 20 | 5 | 15 | 75 | 45 | 18 | 19 | 37 | 14 | 42 | M14 | 39 | M8 | Stroke +30 (55) | 2,1 |
| **3** | 81 | 36 | 5 | 15 | 82 | 50 | 23 | 22 | 41 | 16 | 50 | M20 | 46 | M10 | Stroke +30 (60) | 6 |
| **4** | 115 | 36 | 6 | 16 | 117 | 65 | 32 | 29 | 59 | 20 | 65 | M30 | 60 | M12 | Stroke +50 (85) | 17 |

[1] Stroke pro full rotation of the input shaft. [2] Required torque at max. load (only under optimum conditions, with run-in spindle).
[3] Length in brackets for version with spindle end safety feature. [4] Only weight of gearbox without spindle and accessories.

## Technical Data and Dimensions tables

**Version C:** Travelling nut version.

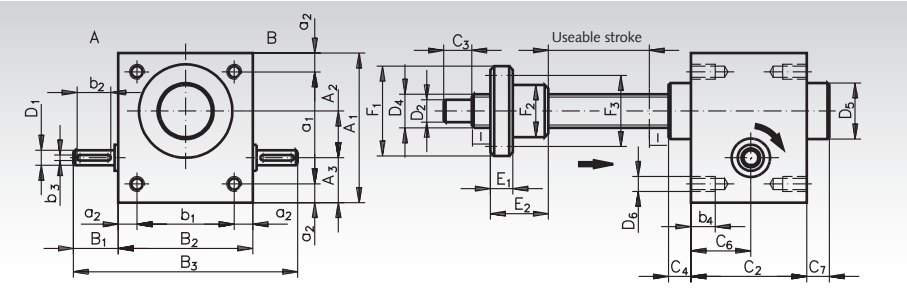


**Ordering details: e.g.: Prod. No. Type, Size, Stroke Length, Accessories**

| Product No. Version C | Size | Max. Stroke Force N | $D_4$ Spindle | Degree of Efficiency % | Stroke* mm | MD** Nm | $A_1$ mm | $A_2$ mm | $A_3$ mm | $a_1$ mm | $a_2$ mm | $B_1$ mm | $B_2$ mm | $B_3$ mm |
|---|---|---|---|---|---|---|---|---|---|---|---|---|---|---|
| **475 020 00** | 0 | 2500 | Tr.16x4 | 33 | 1 | 1,5 | 64 | 22,62 | 17,38 | 48 | 8 | 20 | 54 | 94 |
| **475 021 00** | 1 | 5000 | Tr.18x4 | 33 | 1 | 3,2 | 80 | 25 | 24 | 60 | 10 | 24 | 72 | 120 |
| **475 022 00** | 2 | 10000 | Tr.20x4 | 31 | 1 | 7 | 100 | 32 | 28 | 78 | 11 | 27,5 | 85 | 140 |
| **475 023 00** | 3 | 25000 | Tr.30x6 | 31 | 1 | 16 | 130 | 45 | 31 | 106 | 12 | 45 | 105 | 195 |
| **475 024 00** | 4 | 50000 | Tr.40x7 | 28 | 1 | 34 | 180 | 63 | 39 | 150 | 15 | 47,5 | 145 | 240 |

| Size | $b_1$ mm | $b_2$ mm | $b_3^{P9}$ mm | $b_4$ mm | $C_2$ mm | $C_3$ mm | $C_4$ mm | $C_6$ mm | $C_7$ mm | l mm | $D_1^{h6}$ mm | $D_2^{j6}$ mm | $D_5$ mm | $D_6$ mm | $E_1$ mm | $E_2$ mm | $F_1$ mm | $F_2^{h9}$ mm | $F_3$ mm | Mounting Bore Travelling Nut | Weight only Gearbox kg |
|---|---|---|---|---|---|---|---|---|---|---|---|---|---|---|---|---|---|---|---|---|---|
| **0** | 38 | 16 | 3 | 11 | 50 | 12 | 12 | 25 | 17 | 10 | 9 | 10 | 30 | M6 | 10 | 25 | 45 | 25 | 35 | 6 x Ø6 | 0,6 |
| **1** | 52 | 18 | 3 | 13 | 62 | 15 | 12 | 32 | 17 | 10 | 10 | 12 | 30 | M8 | 12 | 44 | 48 | 28 | 38 | 6 x Ø6 | 1,2 |
| **2** | 63 | 20 | 5 | 15 | 75 | 20 | 18 | 37 | 23 | 15 | 14 | 15 | 39 | M8 | 12 | 44 | 55 | 32 | 45 | 6 x Ø7 | 2,1 |
| **3** | 81 | 36 | 5 | 15 | 82 | 25 | 23 | 41 | 28 | 20 | 16 | 20 | 46 | M10 | 14 | 46 | 62 | 38 | 50 | 6 x Ø7 | 6 |
| **4** | 115 | 36 | 6 | 16 | 117 | 30 | 32 | 59 | 37 | 25 | 20 | 25 | 60 | M12 | 16 | 73 | 95 | 63 | 78 | 6 x Ø9 | 17 |

* Stroke pro full rotation of the input shaft.
** Required torque at max. load (only under optimum conditions, with run-in spindle).

## Accessories: Flange Plates for Version A and B

**Material:** Steel 16MnCr5.

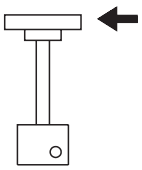

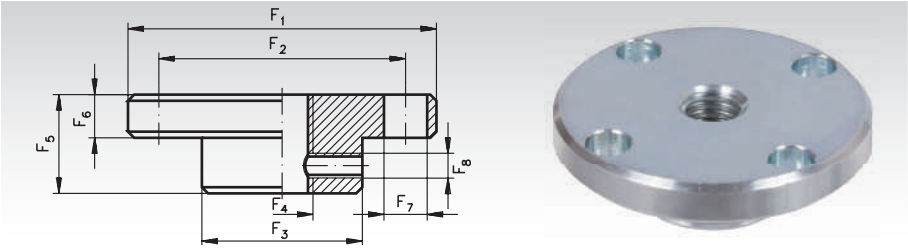

| Size | $F_1$ mm | $F_2$ mm | $F_3$ mm | $F_4$ | $F_5$ mm | $F_6$ mm | $F_7$ mm | $F_8$ | Weight kg |
|---|---|---|---|---|---|---|---|---|---|
| **0** | 50 | 40 | 26 | M10 | 16 | 7 | 7 | M4 | 0,1 |
| **1** | 65 | 48 | 29 | M12 | 20 | 7 | 9 | M5 | 0,2 |
| **2** | 80 | 60 | 39 | M14 | 21 | 8 | 11 | M6 | 0,3 |
| **3** | 90 | 67 | 46 | M20 | 23 | 10 | 11 | M8 | 0,6 |
| **4** | 110 | 85 | 60 | M30 | 30 | 15 | 13 | M8 | 1,3 |

## Accessories: Fastening Strip Sets

**Material:** Steel St52.

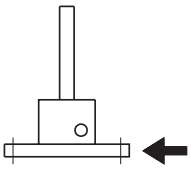

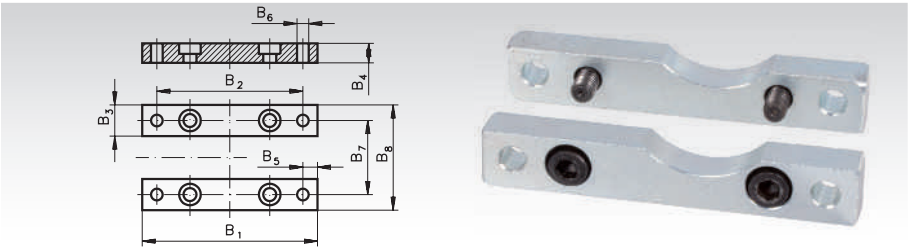

| Size | $B_1$ mm | $B_2$ mm | $B_3$ mm | $B_4$ mm | $B_5$ mm | $B_6$ mm | $B_7$ mm | $B_8$ mm | Weight kg |
|---|---|---|---|---|---|---|---|---|---|
| **0** | 90 | 75 | 15 | 10 | 7,5 | 6,5 | 38 | 54 | 0,1 |
| **1** | 120 | 100 | 20 | 10 | 10 | 8,5 | 52 | 72 | 0,3 |
| **2** | 140 | 120 | 20 | 10 | 10 | 8,5 | 63 | 85 | 0,5 |
| **3** | 170 | 150 | 25 | 12 | 10 | 11 | 81 | 105 | 1 |
| **4** | 230 | 204 | 30 | 16 | 13 | 13,5 | 115 | 145 | 1,8 |

## Accessories For Worm Gear Screw Jacks

### Bellows FB (Standard Version) Material: Molerit TH 59 for Worm Gear Screw Jacks Version A + B

Bellows protect the spindles against dirt and reduce the danger of accidents.
Not yet available for size 0.

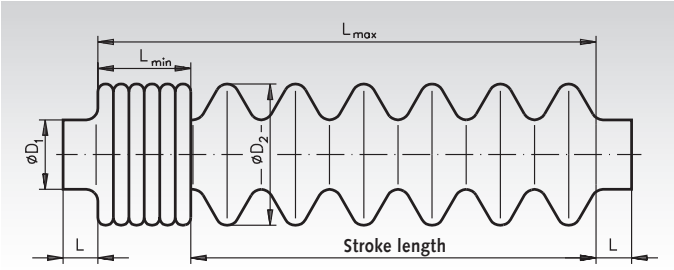

The product number is only required if the bellows is to be delivered separately (not on the gear unit).

| Product No. | Size | $D_1$ mm | $D_2$ mm | L mm | $L_{min}$ mm | $L_{max}$ mm | max. stroke [1] mm | Spindle length extension[2] mm | Weight kg |
|---|---|---|---|---|---|---|---|---|---|
| **475 001 10** | 1 | 30 | 61 | 15 | 40 | 215 | 175 | 36 | 0,1 |
| **475 002 10** | 2 | 39 | 80 | 10 | 80 | 420 | 340 | 66 | 0,1 |
| **475 003 10** | 3 | 46 | 90 | 10 | 70 | 420 | 350 | 40 | 0,2 |
| **475 004 10** | 4 | 60 | 116 | 20 | 120 | 750 | 630 | 120 | 0,8 |

[1] For other stroke lengths on request. Alternatively with coil spring cover.
[2] With other stroke lengths the dimensions change! Extension has to be calculated for the dimensions $C_3$ Page 762.

## End Switches ES-2 with Roller Push Rod

Optional Accessories for Worm Gear Screw Jacks. For end position switching off. Mounting for screw jacks version A and B in protective tube. Special versions of protective tube and spindle are required for this. The end switches have to be ordered together with the jack.

**Ordering Details: e.g.: Worm Gear Screw Jack Type ... with two end switches ES-2 mounted in the protective tube.**

Dimensions: Overall length x width x height = 111 x 31 x 33mm.
NC and NO contacts switch simultaneously.

Minimum operating rate 0.01m/s.
Fastening threads M18.
Wiring M20x1.5
Protection class IP65.

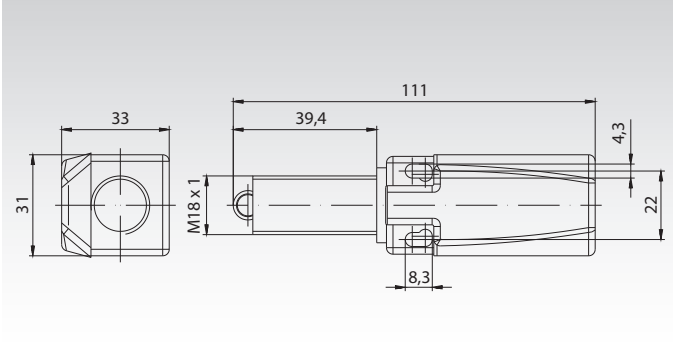


Attachment Schematic

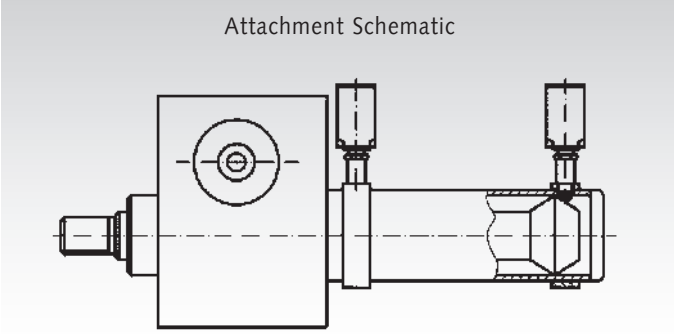

Connecting Shafts Page 766

## Operating Time Worm Gear Screw Jacks NP/I

The stroke force and stroke speed predetermine which model and size should be chosen. A further decision criterion is the heating up caused by friction. To keep this value within limits, the nominal values must be corrected, using a temperature factor ($f_t$). The heating-up process depends on the operating time (OT) per time unit (in %).
For stroke speed $V_H$ = const. applies: $F_{eff} = F_{Nom.} \cdot f_t$

For stroke force F = const. applies:

$F_{eff}$ = effective stroke force
$F_{Nom.}$ = Nominal stroke force for model and size

**OT-$f_t$-Diagram** Example: OT = 40% = A $f_t$ = 0,2

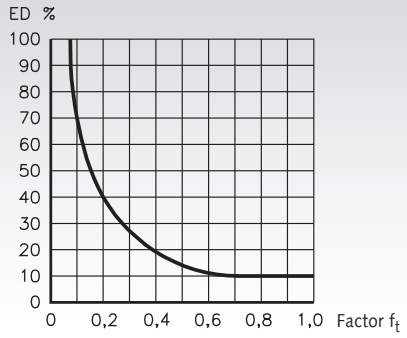


## Buckling

Euler-Case 1 $f_k$=0.5

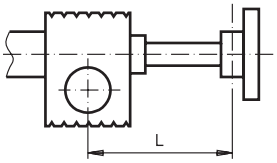


**Version A and B**
unguided stroke
fixed gear unit

Euler-Case 2 $f_k$=1

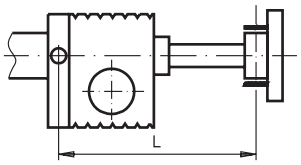


**Version A and B**
guided stroke
with swivel plate

Euler-Case 3 $f_k$=1.4

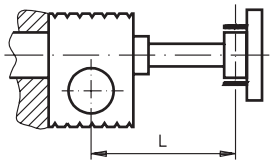


**Version A and B**
guided stroke
fixed gear unit

Euler-Case 4 $f_k$=2

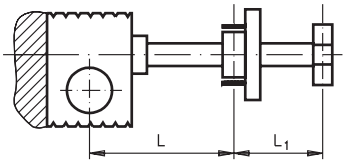


**Version C**
for small $L_1$ applies: $f_k$ = 1.4
(Euler 3)

**Buckling Force Pk [N]**

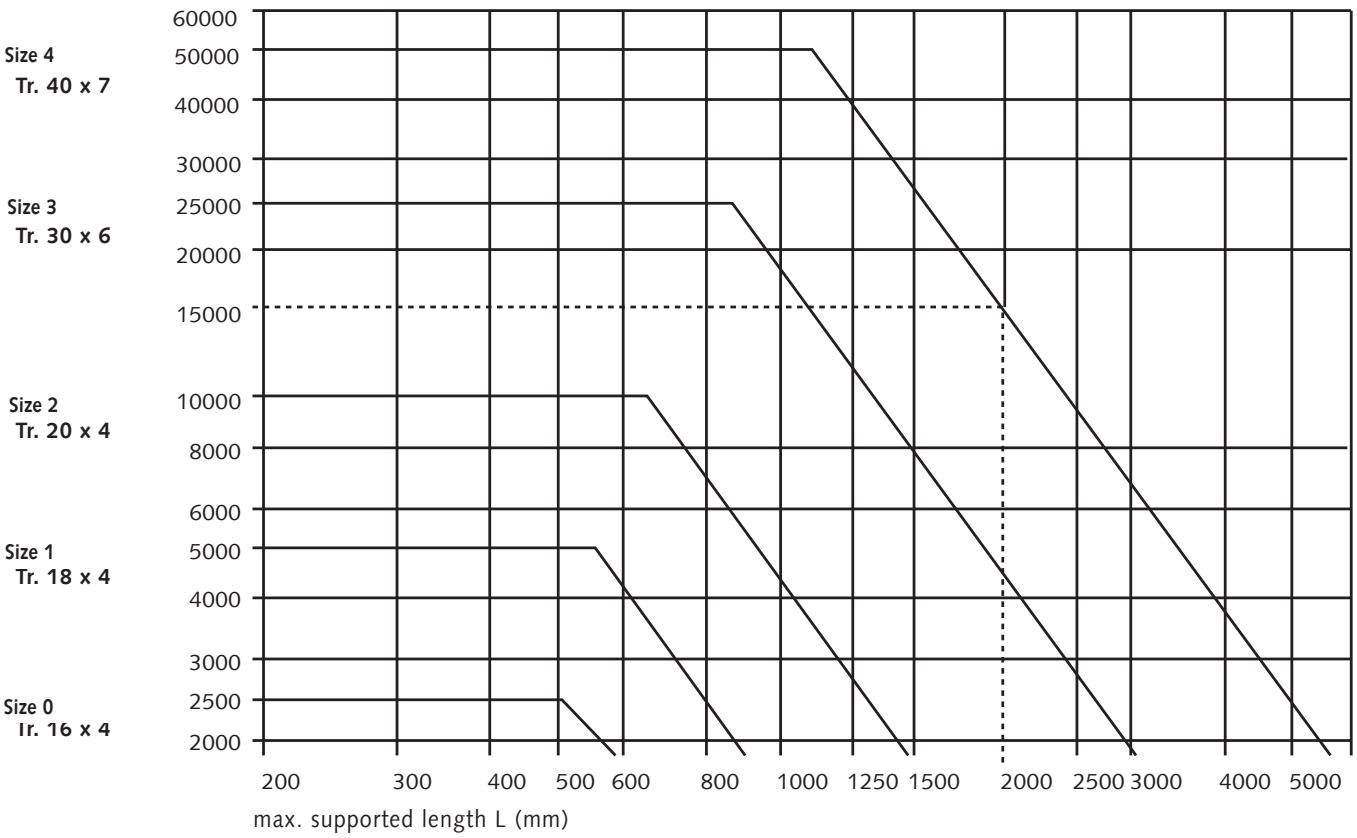


## Example

Worm Gear Screw Jacks with Tr 40 x 7 and a spindle length of 2000 mm (stroke + nut + overrun), assumed safety factor $S_k$ = 4
$P_k$ from table: 15,000 N

Mounting set up Euler 1 = $P_{k\ permiss.}$ = 15,000 x 0.5 x 1/4
Mounting set up Euler 2 = $P_{k\ permiss.}$ = 15,000 x 1.0 x 1/4
Mounting set up Euler 3 = $P_{k\ permiss.}$ = 15,000 x 1.4 x 1/4
Mounting set up Euler 4 = $P_{k\ permiss.}$ = 15,000 x 2.0 x 1/4

## Connecting Shafts RNW, backlash free, with half shell clamp

**Material:** Hubs and tube made of aluminium (stainless steel on request).

Spider (elastic insert) made from polyurethane, hardness 98° Shore A, red.

- Zero backlash, insertable elastic connecting shaft.
- Vibration-damping, ideal for connecting of gearbox shafts.
- Compensation of large shaft misalignment.
- The runout will get tested at each shaft.
- With half shell clamp hubs, ready-to-install, for rapid mounting / demounting without removal of the other units.

Temperature range: -30°C to +100°C.

**Every shaft will be custom made in short time.**

**Delivery time: Regulary only 7 days.**

**Length:** The total length $L_A$ can be chosen stepless in a wide range.

**Boreholes:** The bores can be chosen stepless in a wide range.

**Ordering details: Type, size - total length $L_A$ - bore / bore - speed[1].**

**The product no. will be created in accordance with the customer´s specifications.**

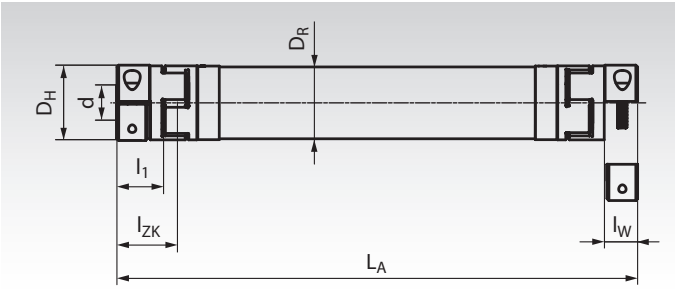


**Ordering Example:** **RNW 14 - 0934 - 12 - 14 - 1500**

**Type, Size** — RNW 14

**Total Length $L_A$ (mm)** — 0934

**Boreholes (mm)** — 12 - 14

**Speed ($min^{-1}$)** — 1500

**Note:** Total length and speed[1] must be specificated with 4 digits.

| Type, Size | Torques $T_{K\,nom.}$[2] Nm | Torques $T_{K\,max.}$[2] Nm | Boreholes d for choosen[3] mm | Length $L_A$ for choosen[4] mm | $D_H$ mm | $D_R$ mm | Ø max.[5] mm | $l_1$ mm | $l_W$ mm | $l_{ZK}$ mm | Weight without tube kg | Weight only tube kg/m |
|---|---|---|---|---|---|---|---|---|---|---|---|---|
| **RNW 14** | 12,5 | 25 | 4 - 14 | 102 - 3000 | 30 | 30 | 34 | 11 | 8 | 17,5 | 0,08 | 1,1 |
| **RNW 19** | 17 | 34 | 8 - 20 | 133 - 3000 | 40 | 35 | 46 | 25 | 19,5 | 33 | 0,30 | 1,32 |
| **RNW 24** | 60 | 120 | 10 - 28 | 157 - 3500 | 55 | 50 | 57,5 | 30 | 22 | 39 | 0,73 | 1,98 |
| **RNW 28** | 160 | 320 | 14 - 38 | 181 - 4000 | 65 | 60 | 73 | 35 | 25 | 45 | 1,04 | 2,42 |
| **RNW 38** | 325 | 650 | 18 - 45 | 229 - 4000 | 80 | 75 | 83,5 | 45 | 33 | 57 | 1,98 | 4,45 |
| **RNW 42** | 450 | 900 | 22 - 50 | 253 - 4000 | 95 | 100 | 100 | 50 | 36,5 | 63 | 3,31 | 7,90 |
| **RNW 48** | 525 | 1050 | 22 - 55 | 281 - 4000 | 105 | 100 | 100 | 56 | 39,5 | 70 | 4,57 | 7,90 |

[1] The max. speed depends on the size and on the total length LA. See chart on next page.

[2] These torques can be endured by the insert. For the dimensioning, the max. torque rates of the clamp hubs must also be considered.

[3] Standard boreholes with the max. torques of the clamp hubs see next page.

[4] Greater lengths on request.

[5] Screw head protrudes past diameter $D_H$ or $D_R$.

### Further Details

| Type Size | Screw Size DIN 912 | Tightening Torque Nm | Torsion Stiffness CT/m dyn. Nm/rad | Moment of Inertia Couplings[5] $10^{-3}$ Kgm² | Moment of Inertia Tube/m $10^{-3}$ Kgm² |
|---|---|---|---|---|---|
| **RNW 14** | M4 | 5 | 500 | 0,001 | 0,18 |
| **RNW 19** | M6 | 10 | 1770 | 0,044 | 0,30 |
| **RNW 24** | M6 | 10 | 6400 | 0,133 | 1,01 |
| **RNW 28** | M8 | 25 | 11400 | 0,202 | 1,84 |
| **RNW 38** | M8 | 25 | 23000 | 0,491 | 5,13 |
| **RNW 42** | M10 | 49 | 194000 | 4,08 | 16,2 |
| **RNW 48** | M12 | 86 | 194000 | 6,86 | 16,2 |

[5] Moment without tube, calculated at the biggest borehole.

### Spare Part Inserts

| Product-No. Spare Part Insert | Type, Size | Ø ca. mm | Number of Teeth | Weight g |
|---|---|---|---|---|
| **605 198 14** | RNW 14 | 30 | 4 | 4,6 |
| **605 198 19** | RNW 19 | 40 | 6 | 7 |
| **605 198 24** | RNW 24 | 55 | 8 | 18 |
| **605 198 28** | RNW 28 | 65 | 8 | 29 |
| **605 198 38** | RNW 38 | 80 | 8 | 49 |
| **605 198 42** | RNW 42 | 95 | 8 | 79 |
| **605 198 48** | RNW 48 | 105 | 8 | 98 |

## Connecting Shafts RNW, further details

### Boreholes and maximum torques of the clamp hubs

| Type, Size | Standard boreholes [mm] max. torque rates of the clamp hubs [Nm][1] | | | | | | | | | | | | | | | | | | | | | | | | | |
|---|---|---|---|---|---|---|---|---|---|---|---|---|---|---|---|---|---|---|---|---|---|---|---|---|---|---|
| | 4 | 6 | 8 | 10 | 11 | 14 | 15 | 16 | 18 | 19 | 20 | 22 | 24 | 25 | 28 | 30 | 32 | 35 | 38 | 40 | 42 | 45 | 46 | 48 | 50 | 55 |
| **RNW 14** | 3,5 | 4,8 | 5,1 | 5,5 | 5,6 | 6,1 | | | | | | | | | | | | | | | | | | | | |
| **RNW 19** | | | 17 | 21 | 23 | 30 | 32 | 34 | 38 | 40 | 42 | | | | | | | | | | | | | | | |
| **RNW 24** | | | | 21 | 23 | 30 | 32 | 34 | 38 | 40 | 42 | 47 | 51 | 53 | 59 | | | | | | | | | | | |
| **RNW 28** | | | | | | 54 | 58 | 62 | 70 | 74 | 78 | 86 | 93 | 97 | 109 | 117 | 124 | 136 | 148 | | | | | | | |
| **RNW 38** | | | | | | | | | 70 | 74 | 78 | 86 | 93 | 97 | 109 | 117 | 124 | 136 | 148 | 156 | 163 | 175 | | | | |
| **RNW 42** | | | | | | | | | | | | 136 | 149 | 155 | 174 | 186 | 198 | 217 | 235 | 248 | 260 | 279 | 285 | 297 | 310 | |
| **RNW 48** | | | | | | | | | | | | 199 | 217 | 226 | 253 | 271 | 290 | 317 | 344 | 362 | 380 | 407 | 416 | 434 | 452 | 498 |

[1] Other boreholes (intermediate sizes) are available at the same price. Keyways are available at extra charge.

### Max. shaft disalignment

Axial misalignment

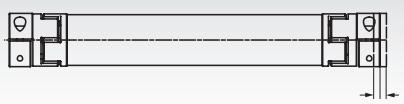

See table misalignment values.

Radial misalignment

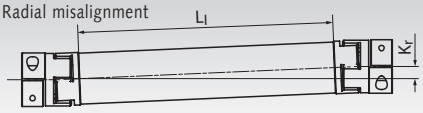


$L_l = L_A - (2 \times l_{ZK})$

$K_r$ max. = 1.2 mm per 100 mm $L_l$

Angular misalignment

See table misalignment values.

### Max. speed in relation to the total length $L_A$. Higher speed on request.

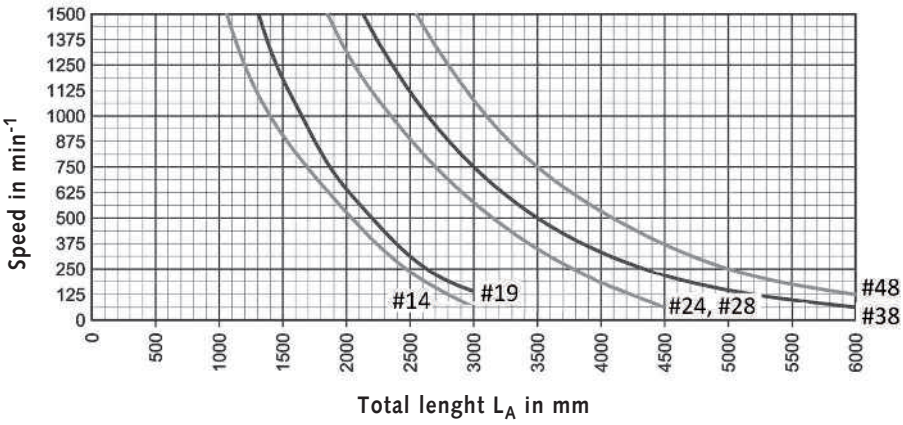


### Misalignment values of the connecting shafts

| Type, Size | Axial Misalignment mm | Angular Misalignment ° |
|---|---|---|
| **RNW 14** | +1,0 / -0,5 | 0,9 |
| **RNW 19** | +1,2 / -0,5 | 0,9 |
| **RNW 24** | +1,4 / -0,5 | 0,9 |
| **RNW 28** | +1,5 / -0,7 | 0,9 |
| **RNW 38** | +1,8 / -0,7 | 0,9 |
| **RNW 42** | +2,0 / -1,0 | 0,9 |
| **RNW 48** | +2,1 / -1,0 | 0,9 |

Please note that the max. misalignment values (axial, radial and angular displacement) are mutually exclusive. If the misalignment in one direction reaches the maximum, the other two remaining misalignments must be at zero.

### Further models on request

**One side stiff:**
One side stiff, other side with elastic coupling.
For example for use with a pillow block bearing at the stiff side.

**Both sides stiff:**
Both sides stiff, without any elastic coupling.
To use only, if there is no misalignment.

**Stainless steel:**
All models are also available in stainless steel ( couplings and also the tube).

# Please use our website

# at www.maedler.de

**Put in a search word or part number and go directly to the product page**

**Find the PDF-catalogue page and further information**

**Manual instructions, certificates, safety data sheets in the section Downloads**

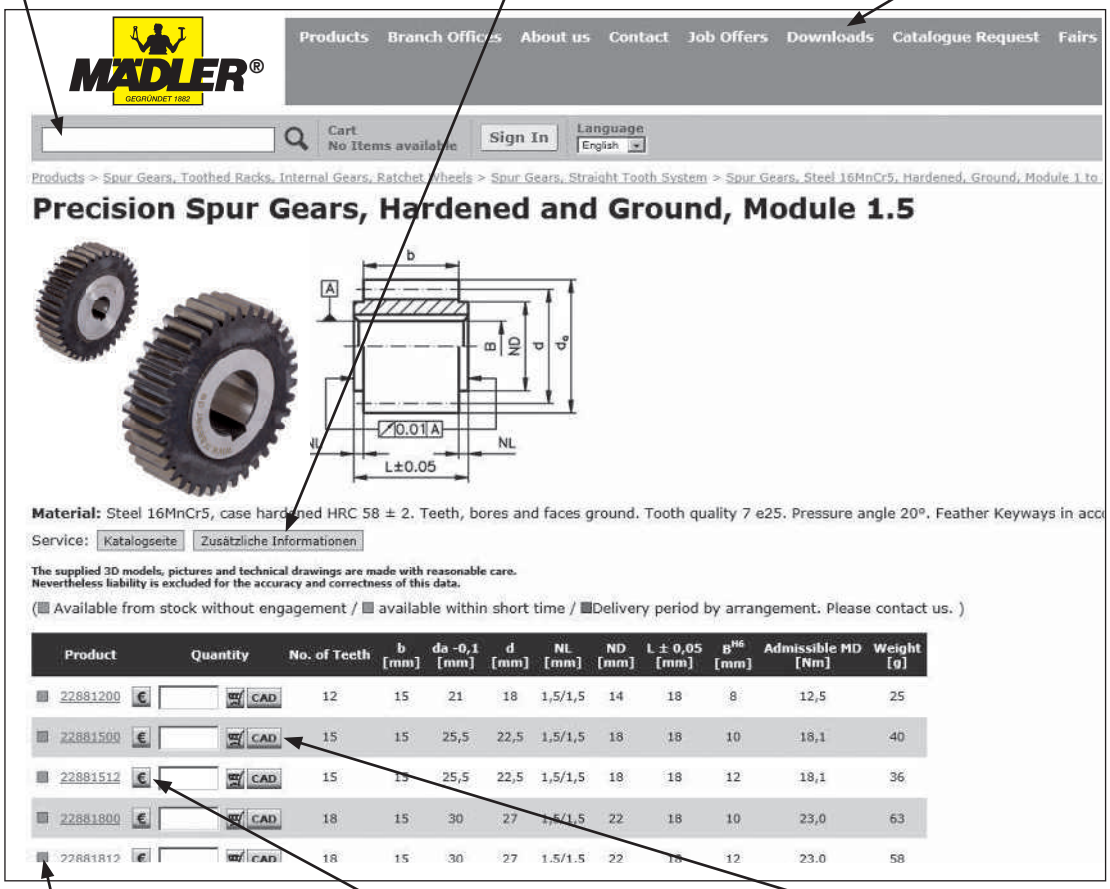


**The availability of all products is shown by coloured sign**

**Drag the mouse onto the currency-symbol to see the prices***

**Download CAD-drawings in 3D**

## A lot of possibilities and information:

- **Download of PDF catalogues in different languages.**
- **See all our branches and distributors.**
- **Make easily your order online and follow your parcel.**
- ***MÄDLER*®-Tools: Use our selection- and calculation tools.**
- **News: Useful information about exhibitions and others.**
- **Newsletter: Monthly information per e-mail.**

* Prices and terms of delivery depend on the country.

**Content (sorted numerically)** **Page**


General description ..... 770
Selection table ..... 771
Linear motion guide DA 0115 RC ..... 810
Slides DZ 0201 ..... 775
Slides DZ 0204 ..... 778
Slides DZ 0301 ..... 796
Slides DZ 0305 ..... 795
Slides DS 0330 ..... 791
Slides DZ 0522 ..... 807
Slides DZ 2002 ..... 774
Slides DZ 2026 ..... 776
Slides DS 2028 ..... 779
Slides DZ 2109 ..... 773
Slides DB / DZ 2132 ..... 777
Slides DZ 2601 ..... 781
Slides DZ 2642 ..... 782
Slides DZ 2907 ..... 790
Slides DS 3031 ..... 797
Slides DZ 3301 ..... 792
Slides DZ 3307 ..... 793
Slides DZ 3308 ..... 794
Slides DZ 3607 ..... 800
Slides DZ 3732 ..... 783
Slides DZ 3832 ..... 784
Slides DH 3832 ..... 785
Slides DZ 3832 DO ..... 788
Slides DZ 3832 SC ..... 787
Slides DZ 3832 TR ..... 786
Slides Type DA 4120 ..... 780
Slides Type DA 4160 ..... 806
Slides DS / DZ 5321 ..... 803
Slides DZ 5321 SC ..... 802
Slides DA 5321 ..... 789
Slides DS 5322 ..... 799
Slides DZ 5417 ..... 798
Slides DZ 7957 ..... 801
Slides DZ 9301 ..... 804
Slides DZ 9308 ..... 805
Brackets DZ 633 ..... 808
Bracket Kits Type DZ 634 ..... 809


**Selection Tool**

on the Internet at

**www.maedler.de**

in the section

**MÄDLER®-Tools**

## General Description and Technical Notes

**General Description and Application**
High-quality, maintenance-free, ball bearing precision slides for various applications in machines and appliances used in trade or industry:
e.g. vending machines, automated pay stations, production plants, for protected storage of input or monitoring devices on computer controlled machine tools and production lines, pull-out shelves, cover hoods etc. In vehicles (mobile workshop, fire rescue or first aid trucks/vehicles, passenger trains) and aeroplanes pull-out objects also facilitate an optimum utilization of the available space.

### Material

**Slide elements:** Cold-rolled steel, in part stainless steel 1.4301.
**Ball retainers:** Pre-plated cold-rolled steel, in part stainless steel or plastic.
**Balls:** Bearing steel, hardened, in part stainless steel.

### Lubrication and Temperature Range

**Maintenance free:** Lubricated for life with low-temperature grease, -20°C to +120°C.
No relubrication required.
Temperature range: -17°C to +70°C.

### Surface Protection

Zinc plated, bright, some parts passivated black or painted white. Type DH3832 with special zinc coating for extra strong corrosion protection (stainless steel parts have their natural colour).

### Selection and Dimensioning

For easy selection we recommend using the selection table on page 771 considering the following criteria:
- **3/4 or full extension.**
- **Load rating.**
- **Additional features.**
- **Surface finish / material.**
- **Outer dimensions.**

An optimum sliding action is achieved under load. The slides should therefore never be heavily over-dimensioned.

### Travel

Difference regarding 3/4 extension and full extension:
**3/4 Extension:** Two-part slides allow a travel of about 75% of the slide length.
**Full extension:** Three-part slides allow a travel of about 100% of the slide length. Some of these types offer an even larger travel (over extension). Type 2026 offers 3/4 extension in both directions.
All other types can only be pulled out in one direction.

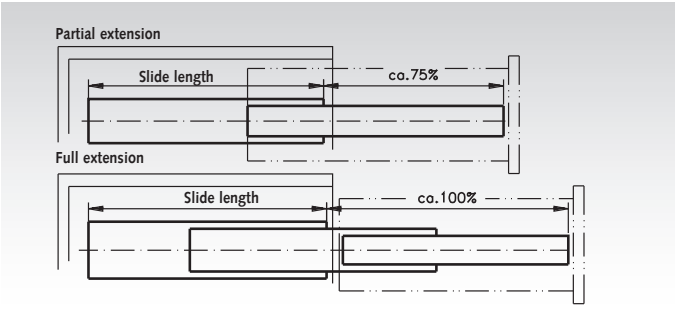


### Additional Features

Depending on the slide type, all slides are equipped for different special requirements:
- **Fast disconnection:** Allows easy disconnection of the drawer.
- **Hold-in:** Holds the drawer in closed position.
- **Hold-out:** Holds the drawer in open position.
- **Locking:** Locks the drawer in closed and/or open position. A lever must be actuated to move the slide.
- **Self close:** A spring mechanism retracts the pulled-out slide.
- **Bracket mount:** For an optimum side or bottom/platform mounting. With Type DZ 2109 the brackets included.

For Types DZ 2132, 3832, 3832SC/DO, 7957, 9301 and 9308 brackets can be ordered separately.
Optional brackets to mount slides inside electrical cabinets can be supplied on request. Some slide types also offer the possibility to adjust the drawer fronts with special adjusting cams.

### Load Bearing Capacity

The stated load ratings relate to the maximum permissible load for a pair of vertically mounted slides (side mounted slides). For horizontally (flat) mounted slides the load bearing capacity is reduced to only 25% of the stated load rating. The load ratings refer to a load applied to the midpoint of the slide, at a travel of 450 mm.
The stated load ratings are dynamic values. For static set ups the value can at max be doubled.

### Mounting

Optimum movement is achieved under slight tensile force. The mounting width should therefore exceed the slide width by 0.2 to 0.5 mm. After mounting, the slides should be checked for easy movement, and if necessary be adjusted. If no easy sliding movement can be achieved, the mounting set up should be checked regarding width, allignment and angularity.

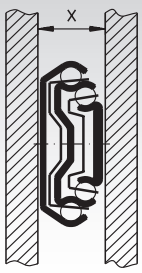


Mounting Width X
= Slide Width +0,2 / +0,5 mm

## Slides Selection Table

The slides in the table are sorted as follows: 1. According to the extension type: Partial or full extension / over extension.
2. Within the extension type: according to load rating, from low to high.

| Slide Type | Page | Travel | Load kg | Width x Height mm | Fast Disconnect | Hold In | Hold Out | Locking 1) | Self Closure | Optional Mounting Brackets | Surface Finish or Material |
|---|---|---|---|---|---|---|---|---|---|---|---|
| **DZ 2109** | **773** | Partial | 35 | 12,7 x 34,8 | ● | ● | ● | | | ● | zinc plated |
| **DZ 2002** | **774** | Partial 2) | 35 | 9,5 x 35,1 | | ● | | | | | zinc plated |
| **DZ 0201** | **775** | Partial | 50 | 9,5 x 35,3 | | | | | | | zinc plated |
| **DZ 2026** | **776** | Partial 2) | 50 | 9,5 x 35,3 | | | ● | | | | zinc plated |
| **DB/DZ 2132** | **777** | Partial | 50 | 12,7 x 35 | ● | ● | | | | ● | either bright or black zinc plated |
| **DZ 0204** | 778 | Partial | 65 | 9,5 x 35,3 | ● | | | A | | | zinc plated |
| **DS 2028** | 779 | Partial | 65 | 9,5 x 35,3 | | ● | | | | | Stainless Steel STAINLESS |
| **DA 4120** | 780 | Partial | 550 | 36 x 80 | | | | | | | Aluminium |
| **DZ 2601** | 781 | Full | 45 | 12,7 x 26,3 | | ● | | | | | zinc plated |
| **DZ 2642** | 782 | Full | 45 | 12,7 x 26,3 | | ● | | | | | zinc plated |
| **DZ 3732** | 783 | Full | 40 | 12,7 x 37 | ● | ● | | | | ● | zinc plated |
| **DZ 3832** | 784 | Full | 50 | 12,7 x 45,7 | ● | ● | | | | ● | zinc plated |
| **DH 3832** | 785 | Full | 50 | 12,7 x 45,7 | ● | ● | | | | | zinc plated |
| **DZ 3832TR** | 786 | Full | 45 | 12,7 x 45,7 | ● | Touch Release 3) | | | | | zinc plated |
| **DZ 3832SC** | 787 | Full | 50 | 12,7 x 45,7 | ● | ● | | | ● | ● | zinc plated |
| **DZ 3832DO** | 788 | Full | 50 | 12,7 x 45,7 | ● | ● | ● | | | ● | zinc plated |
| **DA 5321** | 789 | Over | 50 | 19,1 x 53,1 | | ● | | | | | Aluminium |
| **DZ 2907** | 790 | Over | 55 | 9,6 x 41 | ● | | | A | | | zinc plated |
| **DS 0330** | 791 | Full | 80 | 19,1 x 35 | | ● | | | | | Stainless Steel STAINLESS |
| **DZ 3301** | 792 | Over | 68 | 12,7 x 50,8 | | ● | | | | | zinc plated |
| **DZ 3307** | 793 | Over | 68 | 12,7 x 50,8 | ● | | | A | | | zinc plated |
| **DZ 3308** | 794 | Over | 68 | 12,7 x 50,8 | ● | | | E/A | | | zinc plated |
| **DZ 0305** | 795 | Over | 70 | 19,1 x 35,5 | ● | | | A | | | zinc plated |
| **DZ 0301** | 796 | Over | 70 | 19,1 x 35,3 | | | | | | | zinc plated |
| **DS 3031** | 797 | Over | 80 | 19,1 x 35,3 | | | | | | | Stainless Steel STAINLESS |
| **DZ 5417** | 798 | Over | 100 | 17,5 x 54,0 | | ● | | | | | zinc plated |
| **DS 5322** | 799 | Over | 120 | 20,7 x 53,1 | | ● | | | | | Stainless Steel STAINLESS |
| **DZ 3607** | 800 | Over | 120 | 19,1 x 53,1 | ● | | | A | | | zinc plated |
| **DZ 7957** | 801 | Full | 160 | 19,1 x 70,8 | ● | | | | | ● | zinc plated |
| **DZ 5321SC** | 802 | Over | 120 | 19,1 x 53,1 | | ● | | | ● | | zinc plated |
| **DZ 5321** | 803 | Over | 170 | 19,1 x 53,1 | | ● | | | | | zinc plated |
| **DS 5321** | 803 | Over | 170 | 19,1 x 53,1 | | ● | | | | | Stainless Steel STAINLESS |
| **DZ 0522** | 807 | Over | 180 | 26,5 x 95,5 | | | | | | | zinc plated |
| **DZ 9301** | 804 | Full | 227 | 19,1 x 76,2 | | | | | | ● | zinc plated |
| **DZ 9308** | 805 | Over | 227 | 19,1 x 76,2 | | | | E/A | | ● | zinc plated |
| **DA 4160** | 806 | Full | 300 | 26,5 x 80,0 | | | | | | | Aluminium |

1) A = Locks in open position. E = Locks in closed position.
2) Partial Extension in both directions.
3) Opens by pressing on the drawer (grip or knob not required).

***Other Accuride® Products on request.***

***Linear guides on page 810***

# Operating and maintenance instructions

## on the internet at www.maedler.de

## in the Section Downloads

On our website you can find operating and maintenance instructions in various languages for all our technically-sophisticated products. We are continuously extending this list of instructions.

| Instructions available: | Language | | |
|---|---|---|---|
| Bevel Gearboxes DZA, DZR | German | English | French |
| Bevel Gearboxes KU/I, KUM | German | English | French |
| Chain Tensioners SPANNBOX®, SPANNBOY® | Deutsch | English | |
| Continuously Variable Geared Motors MUN/I | German | English | |
| Couplings DX | German | English | |
| Couplings RN, RNG, RNH, RNI, RNK, RNT | German | English | |
| Couplings BW / BOS / BOZ | German | English | French |
| Electronic Drip Oilers ELO | German | English | |
| Frequency Converters FU6 | German | | |
| Frequency Converters RoFre 897 | German | | |
| Helical Gear Boxes BT/I | German | English | |
| Helical Geared Motor HR/I | German | English | |
| Helical Geared Motor NR/I | German | English | French |
| Linear Drives (Actuator Systems) GR/I | German | English | |
| Motor Controllers SFRG 05 | German | | |
| Motor Controllers SFRG 3 | German | | |
| Precision Worm Gear Sets | German | | |
| Safety Clutches CM | German | | |
| Safety Clutches SI | German | English | French |
| Shaft Mounted Gearboxes BOC/I | German | English | |
| Sliding Hubs FA | German | | |
| Sliding Hubs FS | German | English | |
| Sliding Hubs ROBA® | German | | |
| Sliding Hubs with Coupling RNR | German | | |
| Slip Clutches KF | German | English | |
| Slip Clutches R2, R6 | German | | |
| Standard Three-Phase-Motors SM/I | German | | |
| Taper Bushes | German | English | French |
| Telescopic Slides Accuride | German | English | French |
| Worm Geared Motors HMD I / HMD II | German | English | French |
| Worm-Geared Motors MEG / MEK / MH / MZ | German | English | French |
| Worm-Geared Motors R / RH / RL / RM / RS | German | English | French |
| Worm-Geared Motors SRM / SRS | German | English | French |
| Worm-Geared Motors SZM, ZMD | German | English | French |
| Worm Gear Screw Jacks NP/I | German | | |
| Worm Gear Units G/II | German | English | French |
| Worm Gear Units ZM | German | English | French |

## Slides DZ 2109, Width 12.7* mm, with Bracket Mounts, to 35 kg, 3/4 Extension

**Material:**
Slide elements: Cold-rolled steel, bright zinc plated.
Ball retainers: Cold-rolled steel, zinc-plated.
Balls: Hardened steel.

Telescopic ball bearing slides, especially suited for keyboard trays.
- Fast disconnection.
- Hold-in in closed position and hold-out in open position.
- Height-adjustable bracket mount included.
- Optional clip-on bracket (page 808).
- Especially long service life, up to 50,000 cycles!

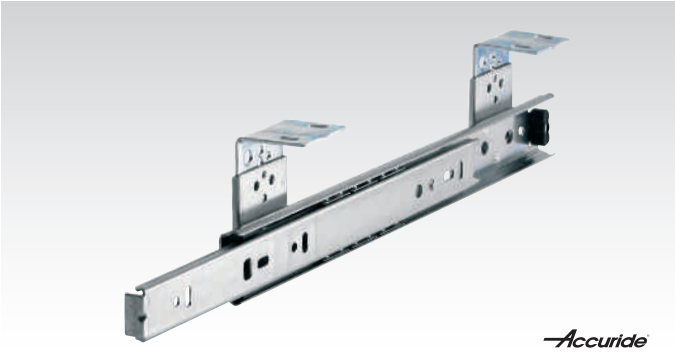


**Ordering details: e.g.: Prod. No. 649 062 30, Slides DZ 2109, with Bracket Mounts**

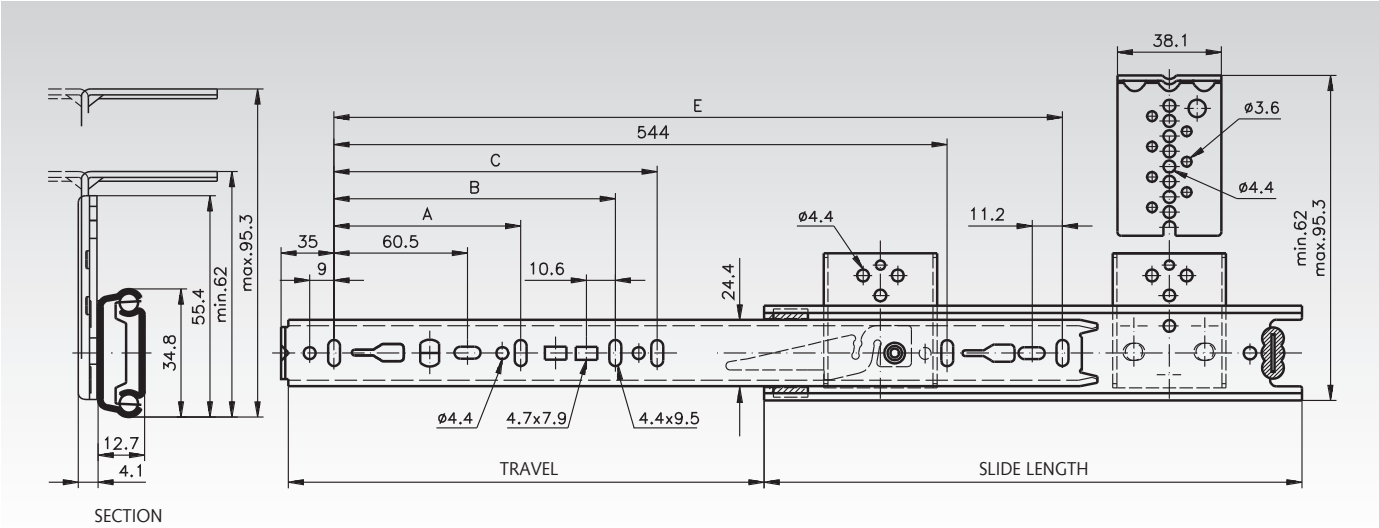


| Product No. per Pair | Slide Length mm | Travel +/-3,2 mm | A mm | B mm | C mm | E mm | F** mm | Load Rating per pair kg | Weight per Pair kg |
|---|---|---|---|---|---|---|---|---|---|
| **649 062 30** | 300 | 205 | 96 | - | - | 242 | 215,9 | 35 | 0,87 |
| **649 062 35** | 350 | 260 | 128 | - | - | 292 | 215,9 | 35 | 0,99 |
| **649 062 40** | 400 | 281 | 128 | - | - | 342 | 215,9 | 30 | 1,07 |
| **649 062 45** | 450 | 331 | 128 | 224 | - | 392 | 215,9 | 30 | 1,14 |
| **649 062 50** | 500 | 376 | 128 | 224 | - | 442 | 292,1 | 25 | 1,23 |
| **649 062 55** | 550 | 415 | 128 | 224 | 320 | 492 | 292,1 | 25 | 1,33 |

* Width with bracket mount 16.8 mm.

** See operating instructions on the internet at www.maedler.de in the Section Downloads.

### Mounting Example: Sliding Keyboard Tray

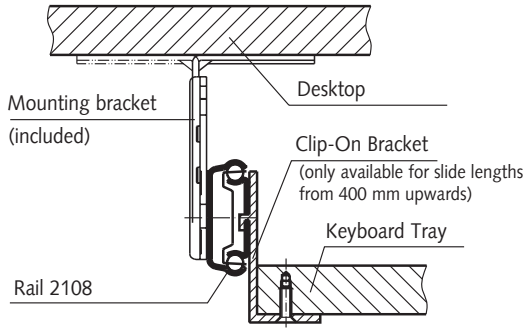


### Note

Recommended mount: M4 screw (included in delivery).
Use all mounting positions to achieve the max. load rating.

Clip-on brackets see page 808.

**Selection Tool**
on the Internet at **www.maedler.de**
in the section **MÄDLER®-Tools**

## Slides DZ 2002, width 9.5 mm, up to 35 kg, extension in both directions

**Material:**
Slide elements: Cold-rolled, bright zinc-plated steel.
Ball retainers: Cold rolled, zinc-plated steel.
Balls: Hardened steel.

Telescopic precision ball bearing slides for applications in the industrial and electronics sector.
- Hold-in in the centre position.
- Forward and return slide. For applications, that require access from both sides of a sliding unit.
- Fasteners included.
- High service life 50,000 cycles.

**Ordering Details: e.g.: Product No. 649 003 30, Slides DZ 2002**

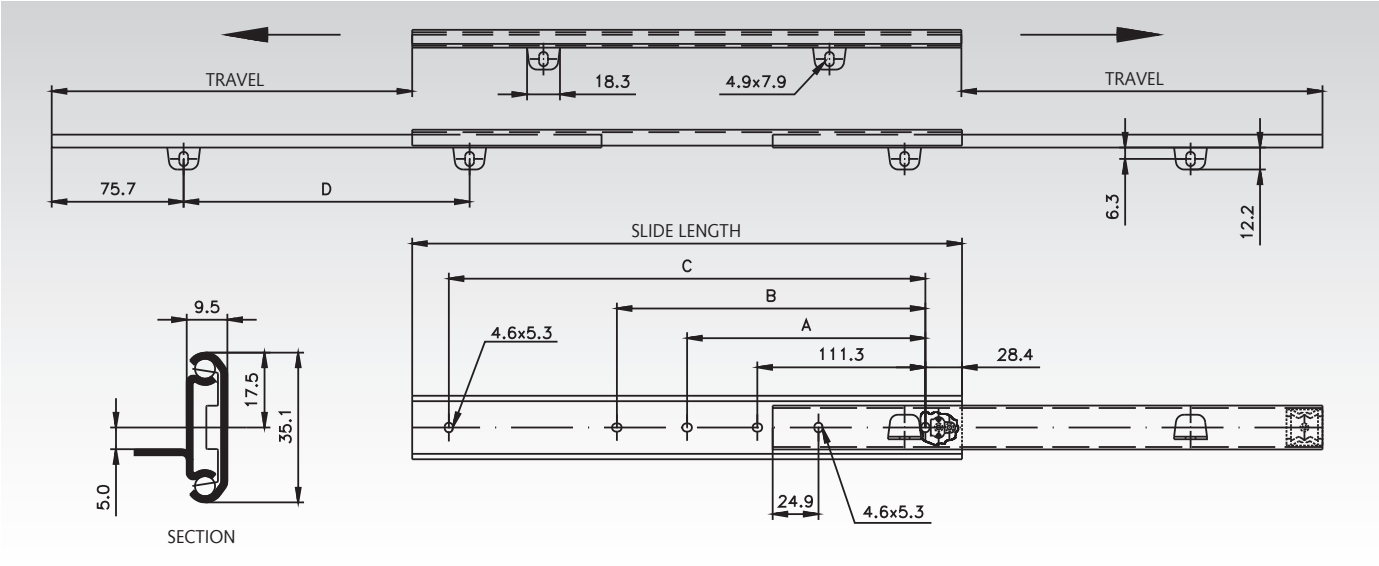


| Product No. per pair | Slide length mm | Travel +/-3.2 mm | A mm | B mm | C mm | D mm | Load Rating Pair kg | Weight Pair kg |
|---|---|---|---|---|---|---|---|---|
| **649 003 30** | 305 | 222 | - | 136,7 | 247,7 | 153,4 | 35 | 0,59 |
| **649 003 35** | 356 | 272 | - | 187,5 | 298,5 | 204,2 | 35 | 0,69 |
| **649 003 40** | 406 | 298 | - | 238,3 | 349,3 | 255,0 | 35 | 0,78 |
| **649 003 45** | 457 | 323 | 200,2 | 289,1 | 400,1 | 305,8 | 35 | 0,89 |
| **649 003 50** | 508 | 374 | 225,6 | 339,9 | 450,9 | 356,6 | 32 | 1,00 |
| **649 003 55** | 558 | 399 | 251,0 | 390,7 | 501,7 | 407,4 | 31 | 1,08 |
| **649 003 60** | 610 | 425 | 276,4 | 441,5 | 552,5 | 458,2 | 29 | 1,19 |
| **649 003 65** | 660 | 476 | 301,8 | 492,3 | 603,3 | 509,0 | 27 | 1,28 |
| **649 003 70** | 711 | 501 | 327,2 | 543,1 | 654,1 | 559,8 | 24 | 1,38 |

### Note

Recommended fastening: M4 screw.
Use all mounting positions to achieve the max. load rating.

## Slides DZ 0201, Width 9.5 mm, to 50 kg, 3/4 Extension

**Material:**
Slide elements: Cold-rolled steel, bright zinc plated.
Ball retainers: Cold-rolled steel, zinc-plated.
Balls: Hardened steel.

Telescopic ball bearing slides for applications in the industrial and electronics sector.
- Can be mounted on both sides.
- Bracket mount for electrical cabinets on request.
- Service life 10,000 cycles.

**Ordering details: e.g.: Prod. No. 649 000 12, Slides DZ 0201**

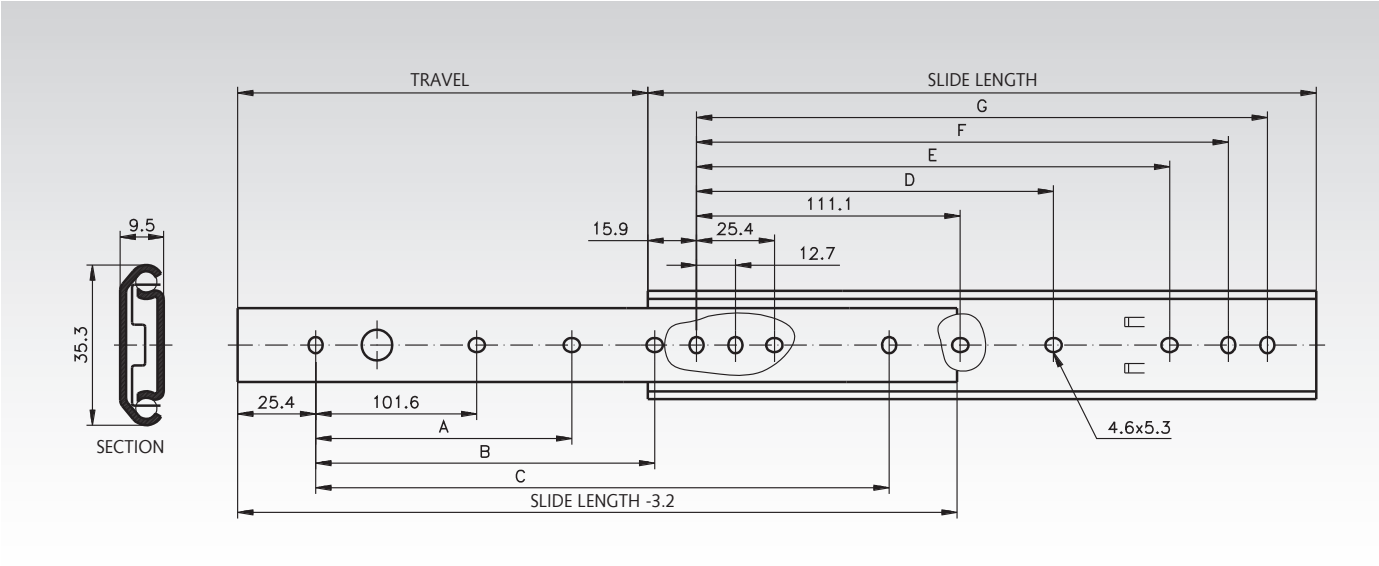


| Product No. per Pair | Slide Length mm | Travel +/-3.2 mm | A mm | B mm | C mm | D mm | E mm | F mm | G mm | Load Rating per Pair kg | Weight per Pair kg |
|---|---|---|---|---|---|---|---|---|---|---|---|
| **649 000 12** | 305 | 227 | - | 152,4 | 254,0 | - | 149,2 | 260,3 | 273,0 | 50 | 0,64 |
| **649 000 14** | 356 | 277 | - | 203,2 | 304,8 | - | 200,0 | 311,2 | 323,9 | 50 | 0,73 |
| **649 000 16** | 406 | 302 | - | 254,0 | 355,6 | - | 250,8 | 361,9 | 374,6 | 45 | 0,83 |
| **649 000 18** | 457 | 328 | 203,2 | 304,8 | 406,4 | 212,7 | 301,6 | 412,7 | 425,4 | 45 | 0,94 |
| **649 000 20** | 508 | 379 | 228,6 | 355,6 | 457,2 | 238,1 | 352,4 | 463,5 | 476,2 | 40 | 0,97 |
| **649 000 22** | 559 | 405 | 254,0 | 406,4 | 508,0 | 263,5 | 403,2 | 514,3 | 527,0 | 40 | 1,07 |
| **649 000 24** | 610 | 429 | 279,4 | 457,2 | 558,8 | 288,9 | 454,0 | 565,1 | 577,8 | 35 | 1,17 |
| **649 000 26** | 660 | 481 | 304,8 | 508,0 | 609,6 | 314,3 | 504,8 | 615,9 | 628,6 | 30 | 1,26 |
| **649 000 28** | 711 | 506 | 330,2 | 558,8 | 660,4 | 339,7 | 555,6 | 666,7 | 679,4 | 30 | 1,45 |

### Note

Recommended mounts: M4 screw.
Use all mounting positions to achieve the max. load rating.

## Slides DZ 2026, Width 9.5 mm, to 50 kg, Two-Way Travel

**Material:**
Slide elements: Cold-rolled steel, bright zinc plated.
Ball retainers: Cold-rolled steel, zinc-plated.
Balls: Hardened steel.

Telescopic ball bearing slides for applications in the industrial and electronics sector.
• Hold-out on both sides.
• Pulls out to front and back. For applications requiring access from both sides of the drawer.
• Service life 10,000 cycles.

**Ordering details: e.g.: Prod. No. 649 004 30, Slides DZ 2026**

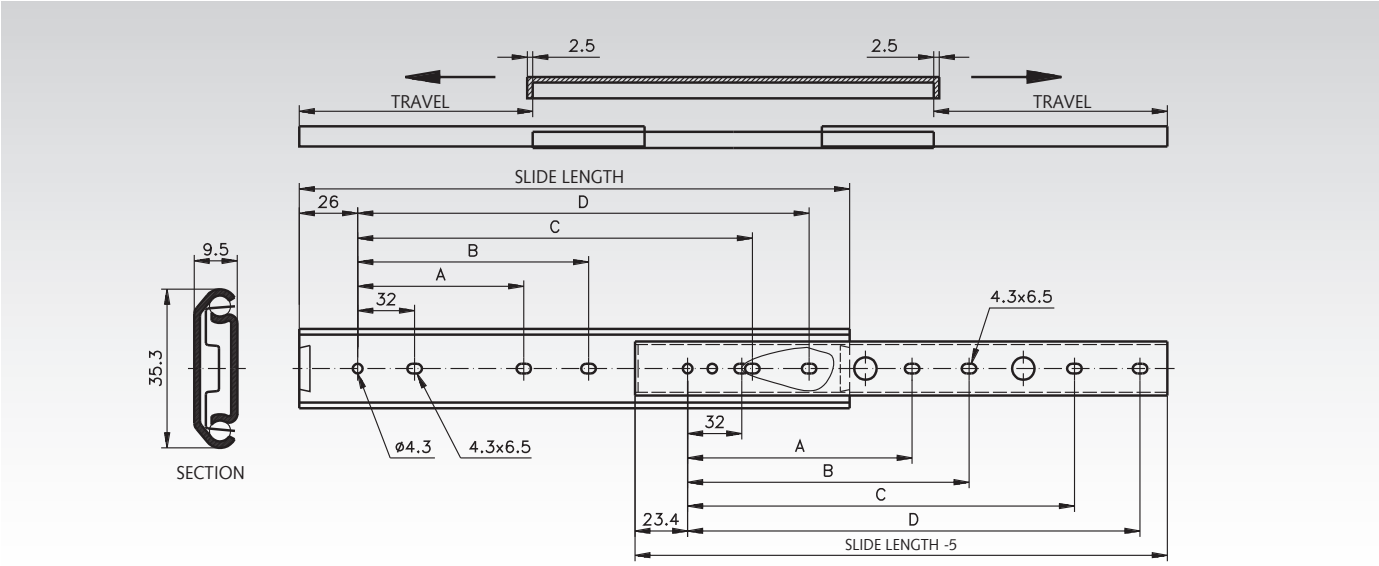


| Product No. per Pair | Slide Length mm | Travel +/-3.2 mm | A mm | B mm | C mm | D mm | Load Rating per Pair kg | Weight per Pair kg |
|---|---|---|---|---|---|---|---|---|
| **649 004 30** | 300 | 209 | 128 | 160 | 224 | 256 | 50 | 0,56 |
| **649 004 35** | 350 | 246 | 160 | 192 | 256 | 288 | 50 | 0,65 |
| **649 004 40** | 400 | 283 | 192 | 224 | 320 | 352 | 45 | 0,74 |
| **649 004 45** | 450 | 321 | 224 | 256 | 352 | 384 | 40 | 0,84 |
| **649 004 50** | 500 | 358 | 256 | 288 | 416 | 448 | 40 | 0,94 |
| **649 004 55** | 550 | 395 | 256 | 288 | 480 | 512 | 35 | 1,03 |
| **649 004 60** | 600 | 433 | 288 | 320 | 512 | 544 | 35 | 1,13 |
| **649 004 65** | 650 | 470 | 288 | 320 | 576 | 608 | 30 | 1,21 |
| **649 004 70** | 700 | 507 | 320 | 352 | 608 | 640 | 30 | 1,32 |

### Note

Recommended mounts: M4 screw.
Use all mounting positions to achieve the max. load rating.

**Selection Tool**
on the Internet at **www.maedler.de**
in the section **MÄDLER® -Tools**

## Slides DZ / DB 2132, Width 12.7 mm, to 50 kg, 3/4 Extension

**Material:**
Slide elements: Cold-rolled steel, zinc plated.
Ball retainers: Cold-rolled steel, zinc-plated.
Balls: Hardened steel.

Telescopic ball bearing slides for applications in the industrial and electronics sector.
- Fast disconnection.
- Hold-in in closed position.
- Optional clip-on bracket (page 808).
- Version zinc plated, either bright or black.
- Cam drawer adjust (3.1 mm).
- Service life 10,000 / 80,000 cycles.

**Ordering details: e.g.: Prod. No. 649 010 25, Slides DZ 2132**

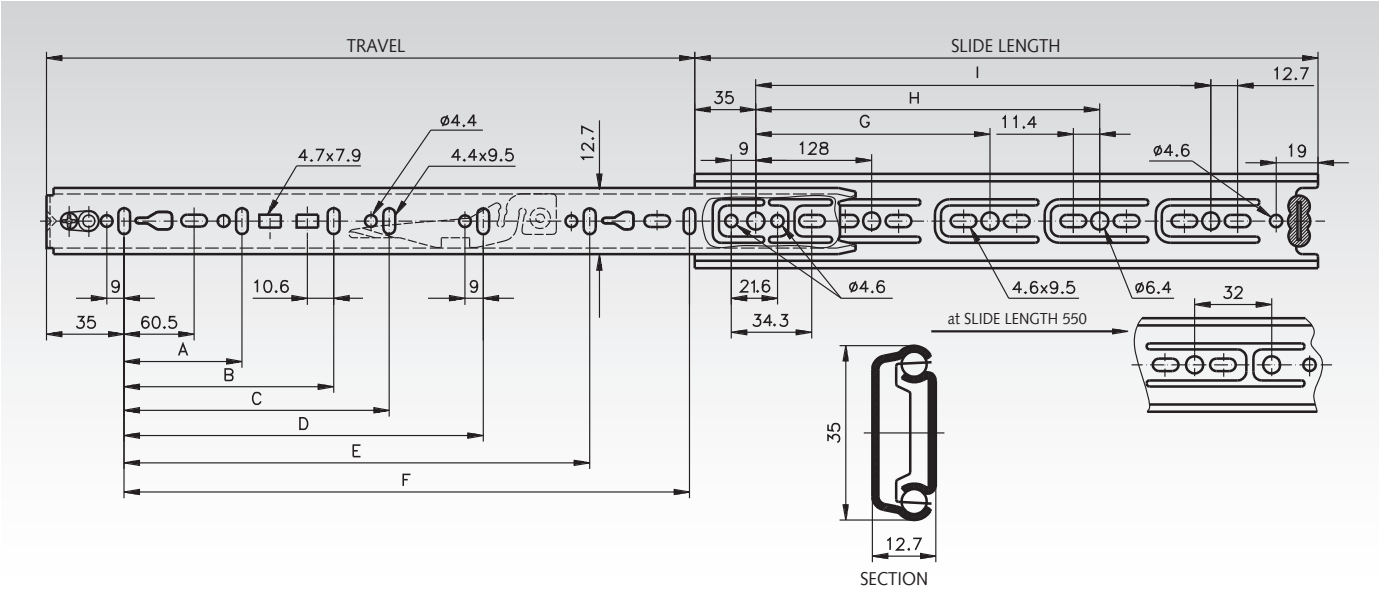


| Product No. per Pair DZ - bright | Product No. per Pair DB - black | Slide Length mm | Travel +/-3.2 mm | A mm | B mm | C mm | D mm | E mm | F mm | G mm | H mm | I mm | Load rating[1] per Pair kg | Weight per Pair kg |
|---|---|---|---|---|---|---|---|---|---|---|---|---|---|---|
| **649 010 25** | **649 110 25** | 250 | 163 | 96 | - | - | - | - | 192 | - | - | - | 50 / 35 | 0,45 |
| **649 010 30** | **649 110 30** | 300 | 205 | 96 | - | - | - | - | 242 | 224 | - | - | 50 / 35 | 0,52 |
| **649 010 35** | **649 110 35** | 350 | 260 | 128 | - | - | - | - | 292 | 224 | - | - | 50 / 35 | 0,64 |
| **649 010 40** | **649 110 40** | 400 | 281 | 128 | - | - | - | - | 342 | 224 | - | 320 | 50 / 35 | 0,71 |
| **649 010 45** | **649 110 45** | 450 | 331 | 128 | 224 | - | - | - | 392 | 224 | - | 352 | 48 / 35 | 0,78 |
| **649 010 50** | **649 110 50** | 500 | 376 | 128 | 224 | - | - | - | 442 | 224 | - | 416 | 45 / 34 | 0,80 |
| **649 010 55** | **649 110 55** | 550 | 415 | 128 | 224 | 320 | - | - | 492 | 224 | 352 | - | 42 / 32 | 0,98 |
| **649 010 60** | **649 110 60** | 600 | 451 | 128 | 224 | 320 | - | - | 542 | 224 | 352 | 480 | 40 / 32 | 1,05 |
| **649 010 65** | **649 110 65** | 650 | 488 | 128 | 224 | 320 | 416 | 544 | 592 | 224 | 352 | 544 | 37 / 31 | 1,17 |
| **649 010 70** | **649 110 70** | 700 | 526 | 128 | 224 | 288 | 416 | - | 642 | 224 | 352 | 544 | 35 / 30 | 1,26 |

[1] At 10,000 / 80,000 cycles.

### Note

Recommended mounts: M4 screw.
Use all mounting positions to achieve the max. load rating.

### Optional Clip-On Brackets see page 808.

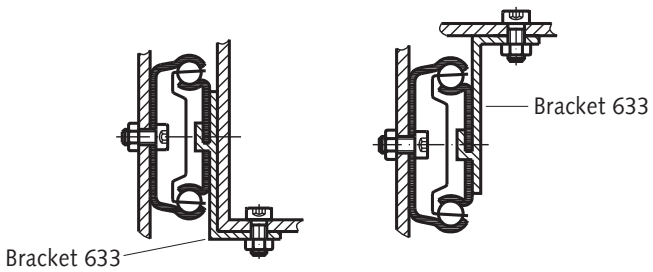

## Slides DZ 0204, Width 9.5 mm, to 65 kg, 3/4 Extension

**Material:**
Slide elements: Cold-rolled steel, bright zinc plated.
Ball retainers: Cold-rolled steel, zinc-plated.
Balls: Hardened steel.

Telescopic ball bearing slides for applications in the industrial and electronics sector.
- Can be mounted on both sides.
- Bracket mount for electrical cabinets on request.
- Fast disconnection.
- Lock-out function.
- Service life 10,000 cycles.

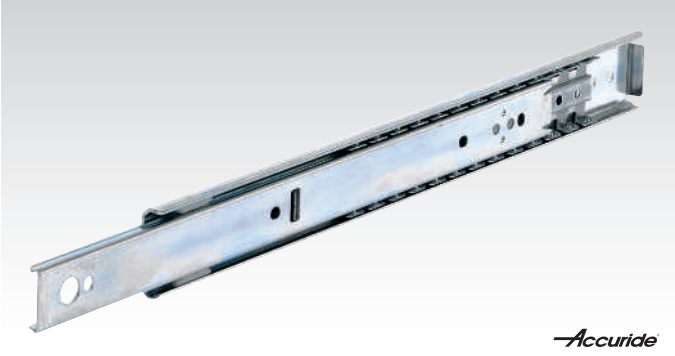


**Ordering details: e.g.: Prod. No. 649 002 12, Slides DZ 0204**

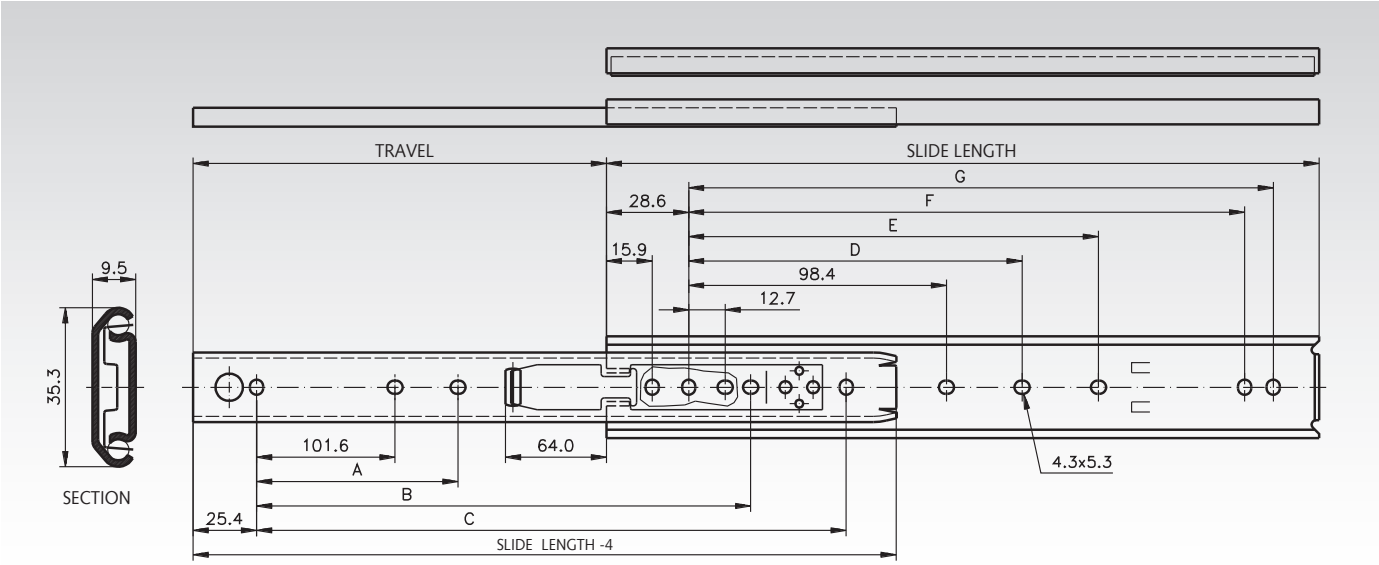


| Product No. per Pair | Slide Length mm | Travel +/-3.2 mm | A mm | B mm | C mm | D mm | E mm | F mm | G mm | Load Rating per Pair kg | Weight per Pair kg |
|---|---|---|---|---|---|---|---|---|---|---|---|
| **649 002 12** | 305 | 202 | - | 215,9 | 254,0 | - | 136,5 | 247,6 | 260,3 | 65 | 0,63 |
| **649 002 14** | 356 | 253 | - | 266,7 | 304,8 | - | 187,3 | 298,4 | 311,1 | 65 | 0,73 |
| **649 002 16** | 406 | 303 | - | 317,5 | 355,6 | - | 238,1 | 349,2 | 361,9 | 60 | 0,84 |
| **649 002 18** | 457 | 329 | 203,2 | 342,9 | 406,4 | 200,0 | 288,9 | 400,0 | 412,7 | 55 | 0,93 |
| **649 002 20** | 508 | 380 | 228,6 | 393,7 | 457,2 | 225,4 | 339,7 | 450,8 | 463,5 | 50 | 1,04 |
| **649 002 22** | 559 | 405 | 254,0 | 419,1 | 508,0 | 250,8 | 390,5 | 501,6 | 514,3 | 40 | 1,14 |
| **649 002 24** | 610 | 431 | 279,4 | 444,5 | 558,8 | 276,2 | 441,3 | 552,4 | 565,1 | 35 | 1,26 |
| **649 002 26** | 660 | 482 | 304,8 | 495,3 | 609,6 | 301,6 | 492,1 | 603,2 | 615,9 | 30 | 1,35 |
| **649 002 28** | 711 | 507 | 330,2 | 520,7 | 660,4 | 327,0 | 542,9 | 654,0 | 666,7 | 30 | 1,48 |

### Note

Recommended mounts: M4 screw.
Use all mounting positions to achieve the max. load rating.

## Slides DS 2028, Width 9.5 mm, to 65 kg, Stainless Steel, 3/4 Extension

**Material:** Stainless steel 1.4301.

Telescopic ball bearing slides for applications in the industrial and electronics sector.
- Hold-in in closed position.
- Ideal for environments where mild steel might corrode.
- Service life 10,000 / 80,000 cycles.

**Ordering details: e.g.: Prod. No. 649 444 30, Slides DS 2028**

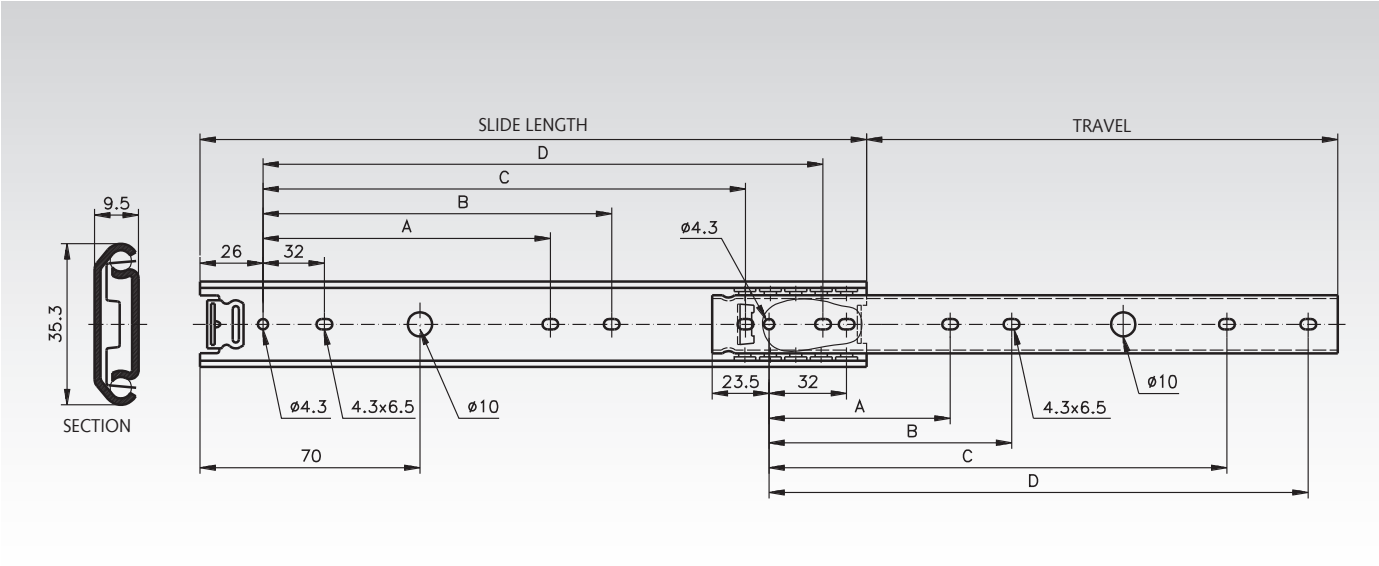


| Product No. per Pair | Slide Length mm | Travel +/-3.2 mm | A mm | B mm | C mm | D mm | Load Rating[1] per Pair kg | Weight per Pair kg |
|---|---|---|---|---|---|---|---|---|
| **649 444 30** | 300 | 209 | 96 | 128 | 224 | 256 | 65 / 60 | 0,54 |
| **649 444 35** | 350 | 245 | 96 | 128 | 256 | 288 | 63 / 57 | 0,64 |
| **649 444 40** | 400 | 282 | 160 | 192 | 320 | 352 | 59 / 54 | 0,74 |
| **649 444 45** | 450 | 320 | 160 | 192 | 384 | 416 | 57 / 50 | 0,83 |
| **649 444 50** | 500 | 357 | 192 | 224 | 416 | 448 | 53 / 47 | 0,92 |
| **649 444 55** | 550 | 394 | 192 | 224 | 480 | 512 | 50 / 45 | 1,02 |
| **649 444 60** | 600 | 432 | 224 | 256 | 512 | 544 | 46 / 43 | 1,12 |
| **649 444 65** | 650 | 469 | 224 | 256 | 576 | 608 | 43 / 41 | 1,21 |
| **649 444 70** | 700 | 506 | 256 | 288 | 608 | 640 | 42 / 40 | 1,30 |

[1] At 10,000 / 80,000 cycles.

### Note

Recommended mounts: M4 screw.
Use all mounting positions to achieve the max. load rating.

## Slides DA 4120, width 36 mm, up to 555 kg, partial extension

**Material:**
Slide elements: Aluminium, corrosion resistant.
Ball retainers and Balls: Stainless Steel.

Heavy Duty Telescopic ball bearing slides for applications in the industrial and electronics sector.
- Single slides available (universal).
- Very high load capacity up to 438 kg.
- Good corrosion resistance.
- Service life 5,000 / 10,000 cycles.

**Note: Sold singly.**

Accuride

**Ordering Details: e.g.: 2 Pieces Prod.-No. 649 070 40, Slide DA 4120**

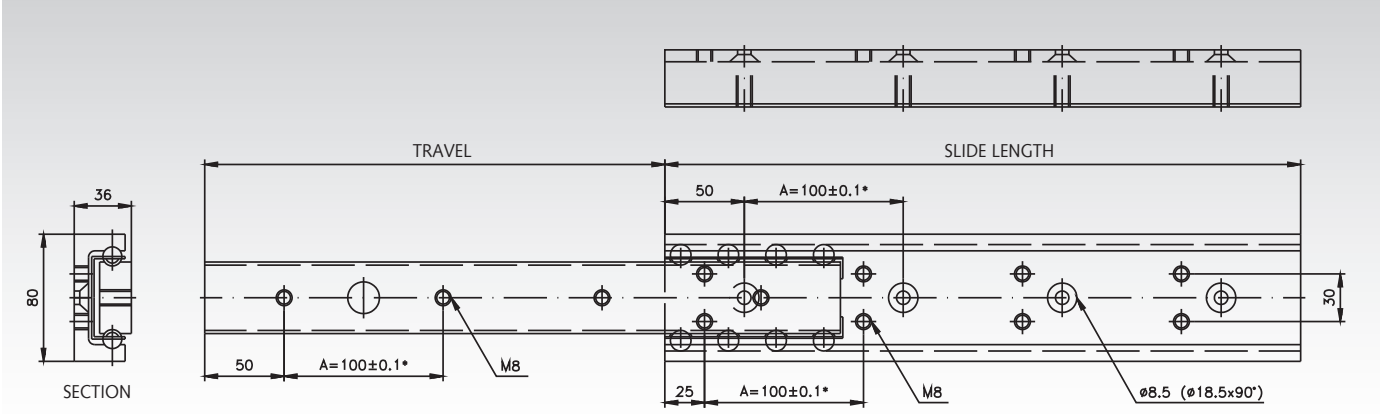


* The tolerances don't stuck up.

| Product No. per piece | Slide length mm | Travel +/-3.2 mm | A mm | Load Rating[1] per pair kg | Load Rating[2] per pair kg | Load Rating[3] per pair kg | Weight piece kg |
|---|---|---|---|---|---|---|---|
| **649 070 40** | 400 | 290 | 100 (3x) | 460 | 370 | 185 | 2,35 |
| **649 070 50** | 500 | 360 | 100 (4x) | 480 | 390 | 195 | 2,93 |
| **649 070 60** | 600 | 430 | 100 (5x) | 490 | 400 | 200 | 3,53 |
| **649 070 70** | 700 | 501 | 100 (6x) | 500 | 410 | 205 | 4,11 |
| **649 070 80** | 800 | 572 | 100 (7x) | 510 | 420 | 210 | 4,68 |
| **649 070 90** | 900 | 642 | 100 (8x) | 520 | 425 | 212 | 5,30 |
| **649 071 00** | 1000 | 713 | 100 (9x) | 530 | 430 | 215 | 5,83 |
| **649 071 10** | 1100 | 783 | 100 (10x) | 540 | 434 | 217 | 6,40 |
| **649 071 20** | 1200 | 853 | 100 (11x) | 550 | 438 | 219 | 6,95 |

[1] At 5,000 cycles.
[2] At 10,000 cycles.
[3] At 10,000 cycles, horizontal mount.

### Note

Recommended fastening: M8 screw.
Use all mounting positions to achieve the max. load rating.
End stops are tested for 10 cycles with 400 kg at 0.8 m/s.
Additional external end stops are recommended.
The load capacity was tested with 10,000 cycles at a slide spacing of 600mm. Larger spacings require more stiffness of the sliding part and adequate parallelism.

## Slides DZ 2601, Width 12.7 mm, to 45 kg, Compact Profile, Full extension

**Material:**
Slide elements: Cold-rolled steel, bright zinc plated.
Ball retainers: Cold-rolled, zinc-plated steel.
Balls: Hardened steel.

Telescopic ball bearing slides for applications in the industrial and electronics sector.
- Very compact profile.
- Universal hole pattern.
- Noise dampening of all end stops.
- Hold-in in closed position.
- Can be mounted on both sides.
- Service life 80,000 cycles.

**Ordering details: e.g.: Prod. No. 649 006 20, Slides DZ 2601**

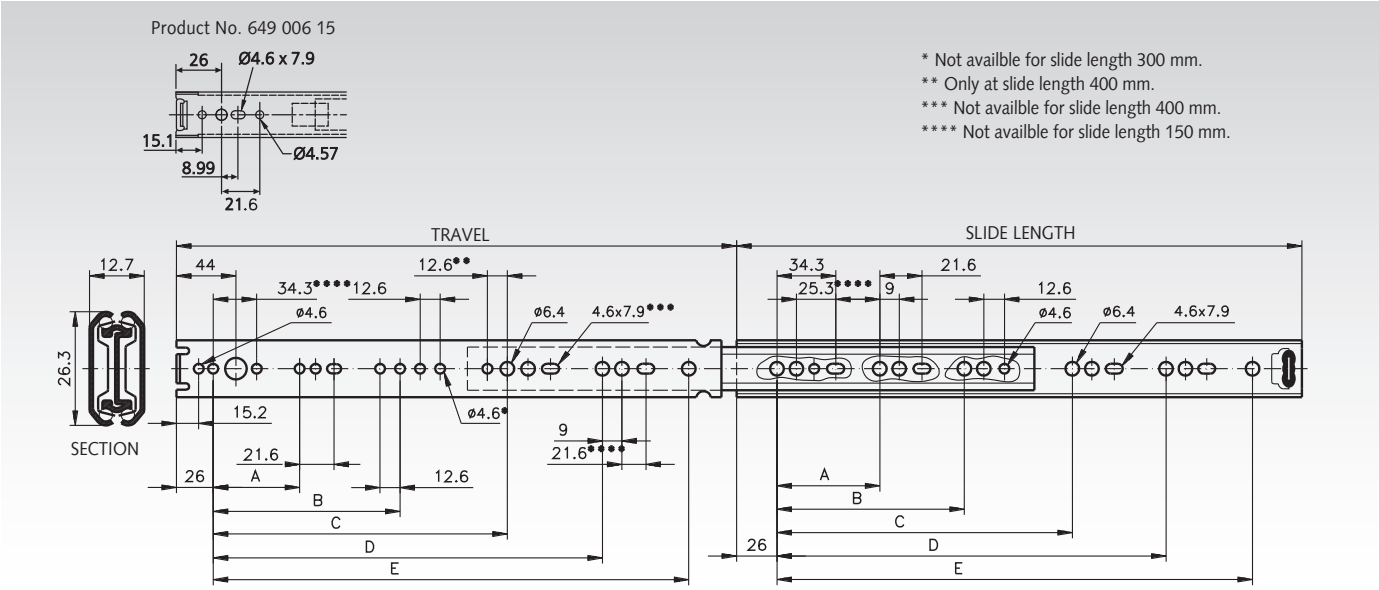


| Product No. per Pair | Slide Length mm | Travel +/-3.2 mm | A mm | B mm | C mm | D mm | E mm | Load Rating per Pair kg | Weight per Pair kg |
|---|---|---|---|---|---|---|---|---|---|
| **649 006 15** | 150 | 148 | 78 | - | - | - | - | 12 | 0,32 |
| **649 006 20** | 200 | 209 | 128 | - | - | - | - | 16 | 0,44 |
| **649 006 25** | 250 | 259 | 128 | - | - | - | - | 25 | 0,55 |
| **649 006 30** | 300 | 308 | 128 | 224 | - | - | - | 32 | 0,67 |
| **649 006 35** | 350 | 357 | 128 | 224 | - | - | - | 35 | 0,78 |
| **649 006 40** | 400 | 406 | 128 | 224 | 320 | - | - | 45 | 0,89 |
| **649 006 45** | 450 | 456 | 128 | 224 | 352 | - | - | 45 | 1,01 |
| **649 006 50** | 500 | 505 | 128 | 224 | 352 | 416 | - | 35 | 1,11 |
| **649 006 55** | 550 | 554 | 128 | 224 | 352 | 448 | 489 | 30 | 1,23 |

### Note

Recommended mount: M4/M6 screw.
Use all mounting positions to achieve the max. load rating.
The load capacity was tested with 80,000 cycles at a slide spacing of 450mm.
Horizontal mounting is not recommended.

**Selection Tool**
on the Internet at **www.maedler.de**
in the section **MÄDLER®-Tools**

## Slides DZ 2642, Width 12.7 mm, to 45 kg, Compact Profile, Full Extension

**Material:**
Slide elements: Cold-rolled steel, bright zinc plated.
Ball retainers: Cold-rolled steel, zinc-plated.
Balls: Hardened steel.

Telescopic ball bearing slides for applications in the industrial and electronics sector.
- Low slide profile.
- Groove or side mounting option.
- Hold-in in closed position.
- Very high service life 80,000 cycles.

**Ordering details: e.g.: Prod. No. 649 008 20, Slides DZ 2642**

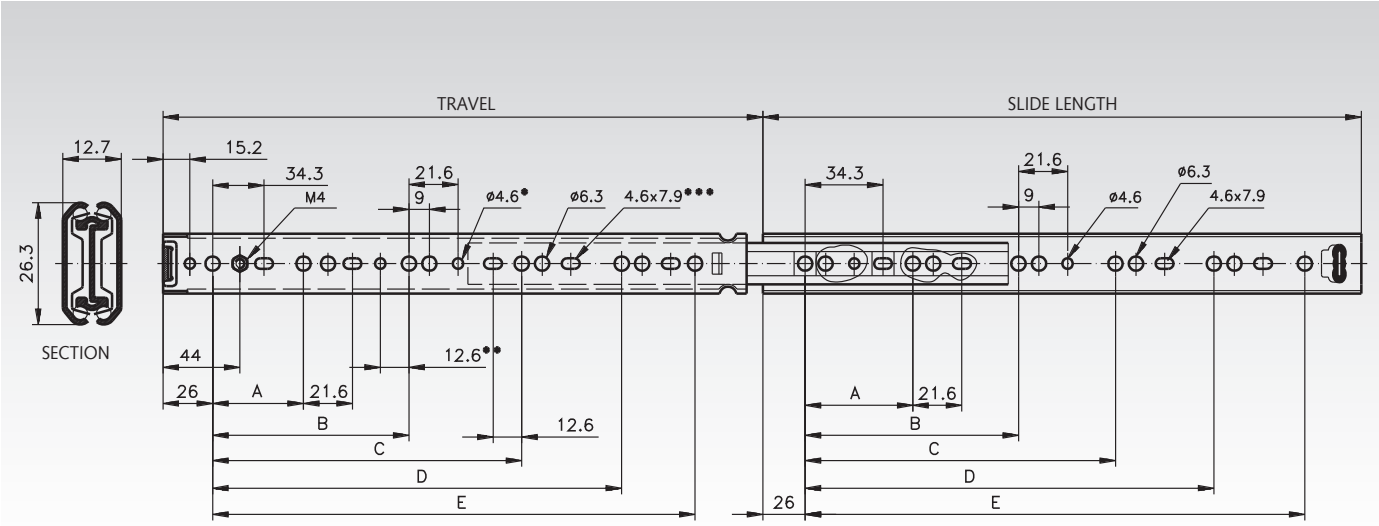


* Not availble for slide length 300 mm.
** Only at slide length 400 mm.
*** Not availble for slide length 400 mm.

| Product No. per Pair | Slide Length mm | Travel +/-3.2 mm | A mm | B mm | C mm | D mm | E mm | Load Rating per Pair kg | Weight per Pair kg |
|---|---|---|---|---|---|---|---|---|---|
| **649 008 20** | 200 | 209 | 128 | - | - | - | - | 16 | 0,44 |
| **649 008 25** | 250 | 259 | 128 | - | - | - | - | 25 | 0,55 |
| **649 008 30** | 300 | 308 | 128 | 224 | - | - | - | 32 | 0,67 |
| **649 008 35** | 350 | 357 | 128 | 224 | - | - | - | 35 | 0,78 |
| **649 008 40** | 400 | 406 | 128 | 224 | 320 | - | - | 45 | 0,89 |
| **649 008 45** | 450 | 456 | 128 | 224 | 352 | - | - | 45 | 1,01 |
| **649 008 50** | 500 | 505 | 128 | 224 | 352 | 416 | - | 35 | 1,11 |
| **649 008 55** | 550 | 554 | 128 | 224 | 352 | 448 | 489 | 30 | 1,23 |

### Note

Recommended mount: M4/M6 screw.
Head-Ø max. 7.8 mm, Head length max. 2 mm.
Use all mounting positions to achieve the max. load rating.
Horizontal mounting is not recommended.

## Slides DZ 3732, width 12.7 mm, up to 40 kg, full extension

**Material:**
Slide elements: Cold rolled steel, bright zinc-plated.
Ball retainers: Plastic / zinc-plated steel.
Balls: Hardened steel.

Telescopic precision ball bearing slides for applications in the industrial and electronics sector.
- Fast Disconnect.
- Hold In.
- Optional Clip-On Brackets (page 808).
- Very high service life up to 80,000 cycles.

Accuride

**Ordering Details: e.g.: Product No. 649 009 30, Slides DZ 3732**

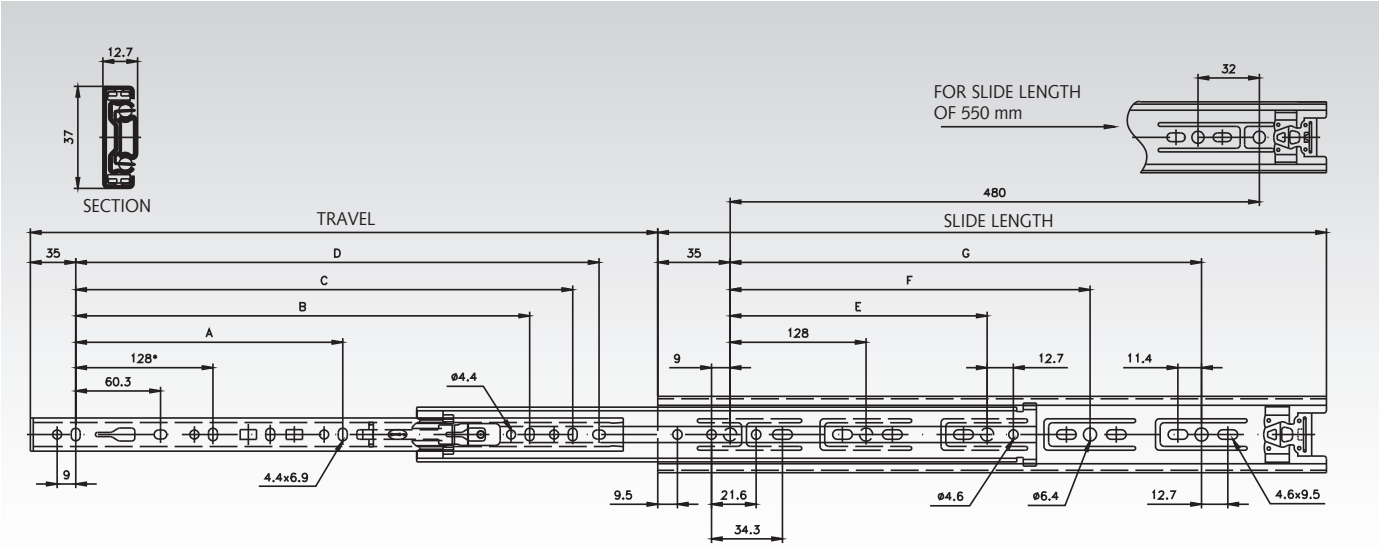


* FOR SLIDE LENGTH OF 300 = 96 mm.

| Product No. per pair | Slide length mm | Travel +/-3.2 mm | A mm | B mm | C mm | D mm | E mm | F mm | G mm | Load Rating Pair kg | Weight Pair kg |
|---|---|---|---|---|---|---|---|---|---|---|---|
| **649 009 30** | 300 | 292 | - | - | - | 230,8 | 224 | - | - | 40 | 0,77 |
| **649 009 35** | 350 | 356 | - | - | - | 280,8 | 224 | - | - | 40 | 0,87 |
| **649 009 40** | 400 | 406 | - | - | - | 330,8 | 224 | - | 320 | 40 | 0,99 |
| **649 009 45** | 450 | 457 | - | 320 | - | 380,8 | 224 | - | 352 | 40 | 1,11 |
| **649 009 50** | 500 | 508 | - | 320 | - | 430,8 | 224 | - | 416 | 40 | 1,25 |
| **649 009 55** | 550 | 559 | - | 320 | 416 | 480,8 | 224 | 352 | - | 40 | 1,37 |
| **649 009 60** | 600 | 610 | 224 | 416 | - | 530,8 | 224 | 352 | 480 | 40 | 1,50 |
| **649 009 65** | 650 | 660 | 224 | 416 | 544 | 580,8 | 224 | 352 | 544 | 40 | 1,63 |

### Note

Recommended fastening: M4 screw.
Use all mounting positions to achieve the max. load rating.
Horizontal mounting is not recommended.
The load capacity was tested with 80,000 cycles at a slide spacing of 450mm.

### Optional Clip-On Brackets see page 808.

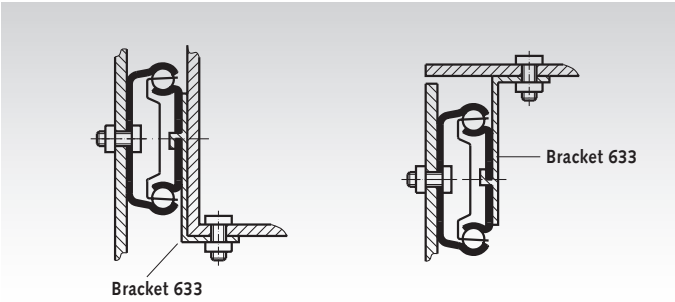

## Slides DZ 3832, Width 12.7 mm, to 50 kg, Full Extension

**Material:**
Slide elements: Cold-rolled steel, bright zinc plated.
Ball retainers: Plastic / zinc-plated steel.
Balls: Hardened steel.

Telescopic ball bearing slides for applications in the industrial and electronics sector.
- Fast disconnection.
- Hold-in in closed position.
- Can be mounted on both sides.
- Cam drawer adjust (3.1 mm).
- Optional clip-on bracket (page 808).
- Service life 10,000 / 80,000 cycles.

**Ordering Details: e.g.: Product No. 649 012 15, Slides DZ 3832**

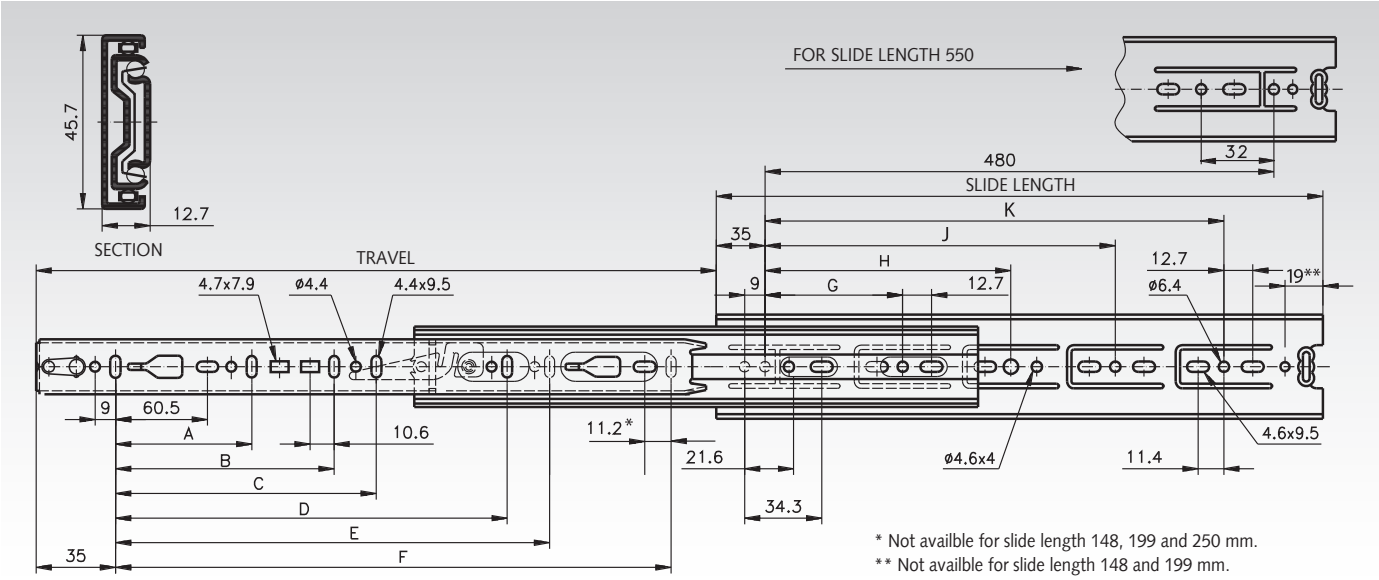


* Not availble for slide length 148, 199 and 250 mm.
** Not availble for slide length 148 and 199 mm.

| Product No. per Pair | Slide Length mm | Travel +/-3.2 mm | Load Rating[1] per Pair kg | Weight per Pair kg |
|---|---|---|---|---|
| **649 012 15** | 148 | 140 | 45 / 39 | 0,44 |
| **649 012 20** | 199 | 203 | 46 / 40 | 0,60 |
| **649 012 25** | 250 | 243 | 47 / 41 | 0,76 |
| **649 012 30** | 300 | 305 | 48 / 42 | 0,90 |
| **649 012 35** | 350 | 356 | 49 / 43 | 1,06 |
| **649 012 40** | 400 | 406 | 50 / 44 | 1,22 |
| **649 012 45** | 450 | 457 | 50 / 45 | 1,36 |
| **649 012 50** | 500 | 508 | 50 / 45 | 1,52 |
| **649 012 55** | 550 | 559 | 50 / 45 | 1,68 |
| **649 012 60** | 600 | 610 | 50 / 45 | 1,85 |
| **649 012 65** | 650 | 660 | 49 / 44 | 2,00 |
| **649 012 70** | 700 | 711 | 48 / 43 | 2,15 |

**Optional Clip-On Brackets** see page 808.

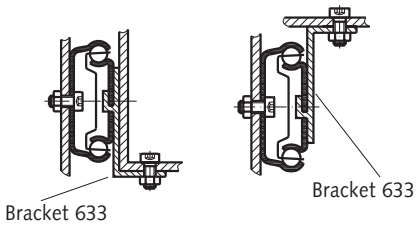


[1] At 10,000 / 80,000 cycles.

| Slide Length mm | Travel +/-3.2 mm | A mm | B mm | C mm | D mm | E mm | F mm | G mm | H mm | J mm | K mm |
|---|---|---|---|---|---|---|---|---|---|---|---|
| **148** | 140 | 96 | - | - | - | - | - | 77,2 | - | - | - |
| **199** | 203 | 128 | - | - | - | - | 141 | 128 | - | - | - |
| **250** | 243 | 96 | - | - | - | - | 192 | 128 | - | - | - |
| **300** | 305 | 96 | - | - | - | - | 242 | 128 | 224 | - | - |
| **350** | 356 | 128 | - | - | - | - | 292 | 128 | 224 | - | - |
| **400** | 406 | 128 | - | - | - | - | 342 | 128 | 224 | 320 | - |
| **450** | 457 | 128 | - | - | 320 | - | 392 | 128 | 224 | 352 | - |
| **500** | 508 | 128 | - | - | 320 | - | 442 | 128 | 224 | 416 | - |
| **550** | 559 | 128 | - | - | 320 | 416 | 492 | 128 | 224 | 352 | 448 |
| **600** | 610 | 128 | 224 | - | 416 | - | 542 | 128 | 224 | 352 | 480 |
| **650** | 660 | 128 | 224 | - | 416 | 544 | 592 | 128 | 224 | 352 | 544 |
| **700** | 711 | 128 | 224 | 288 | 416 | 544 | 642 | 128 | 224 | 352 | 544 |

### Note

Recommended mounts: M4 screw.
Use all mounting positions to achieve the max. load rating.

Horizontal mounting not recommended.
Clip-on brackets see page 744.

## Slides DH 3832, Corrosion Proof, Width 12.7 mm, to 50 kg, Full Extension

**Material:** Slide elements: Cold-rolled steel, special zinc plating.
Ball retainers: Plastic / stainless steel. Balls: Stainless steel.

Telescopic ball bearing slides for applications in the industrial and electronics sector.

- Corrosion proof for rough environments.
- 8 times better protection than with zinc-plated surface finish.
- Ball retainers, balls and rivets made from stainless steel.
- Hold-in in closed position.
- Fast disconnection.
- Cam drawer adjust (3.1 mm).
- Service life 10,000 / 80,000 cycles.

**Ordering details: e.g.: Prod. No. 649 312 25, Slides DH 3832**

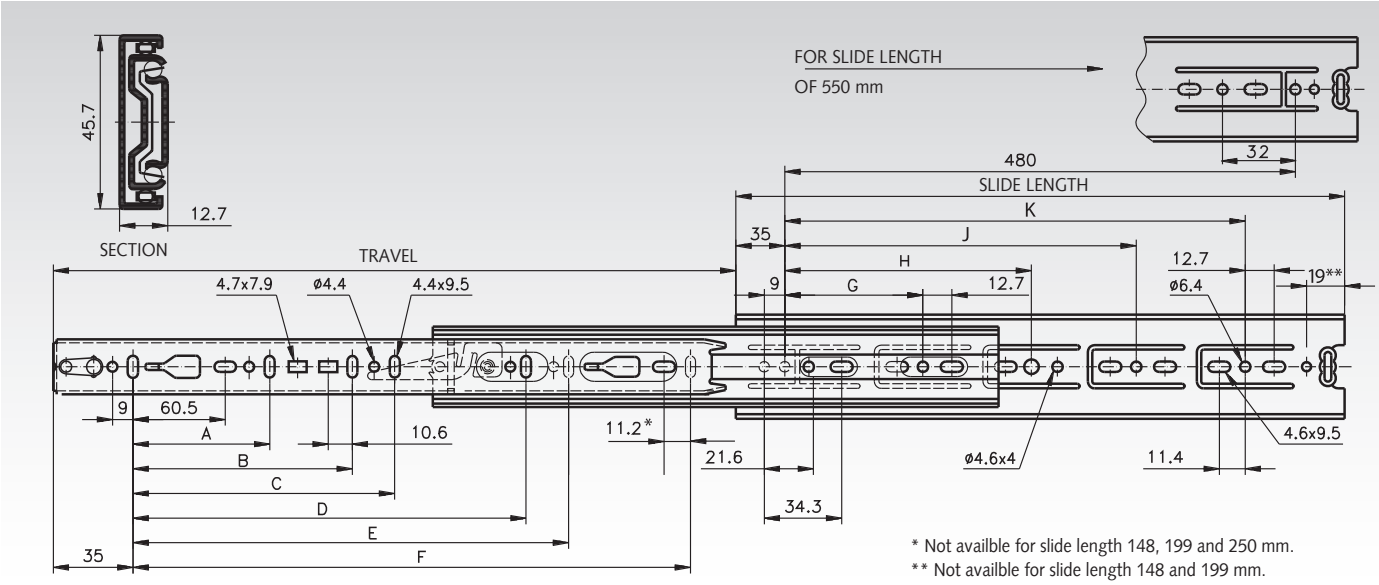


* Not availble for slide length 148, 199 and 250 mm.
** Not availble for slide length 148 and 199 mm.

| Product No. per Pair | Slide Length mm | Travel +/-3.2 mm | A mm | B mm | C mm | D mm | E mm | F mm | G mm | H mm | J mm | K mm | Load Rating[1] per Pair kg | Weight per Pair kg |
|---|---|---|---|---|---|---|---|---|---|---|---|---|---|---|
| **649 312 15** | 148 | 140 | 96 | - | - | - | - | - | 77,2 | - | - | - | 45 / 39 | 0,43 |
| **649 312 20** | 199 | 203 | 128 | - | - | - | - | 141 | 128 | - | - | - | 46 / 40 | 0,61 |
| **649 312 25** | 250 | 243 | 96 | - | - | - | - | 192 | 128 | - | - | - | 47 / 41 | 0,76 |
| **649 312 30** | 300 | 305 | 96 | - | - | - | - | 242 | 128 | 224 | - | - | 48 / 42 | 0,90 |
| **649 312 35** | 350 | 356 | 128 | - | - | - | - | 292 | 128 | 224 | - | - | 49 / 43 | 1,06 |
| **649 312 40** | 400 | 406 | 128 | - | - | - | - | 342 | 128 | 224 | 320 | - | 50 / 44 | 1,21 |
| **649 312 45** | 450 | 457 | 128 | - | - | 320 | - | 392 | 128 | 224 | 352 | - | 50 / 45 | 1,36 |
| **649 312 50** | 500 | 508 | 128 | - | - | 320 | - | 442 | 128 | 224 | 416 | - | 50 / 45 | 1,51 |
| **649 312 55** | 550 | 559 | 128 | - | - | 320 | 416 | 492 | 128 | 224 | 352 | 448 | 50 / 45 | 1,67 |
| **649 312 60** | 600 | 610 | 128 | 224 | - | 416 | - | 542 | 128 | 224 | 352 | 480 | 50 / 45 | 1,85 |
| **649 312 65** | 650 | 660 | 128 | 224 | - | 416 | 544 | 592 | 128 | 224 | 352 | 544 | 49 / 44 | 1,98 |
| **649 312 70** | 700 | 711 | 128 | 224 | 288 | 416 | 544 | 642 | 128 | 224 | 352 | 544 | 48 / 43 | 2,15 |

[1] At 10,000 / 80,000 cycles.

### Note

Recommended mounts: M4 screw.
Use all mounting positions to achieve the max. load rating.
Horizontal mounting not recommended.

**Selection Tool**
on the Internet at **www.maedler.de**
in the section **MÄDLER®-Tools**

## Slides DZ 3832 TR, width 12.7 mm, up to 45 kg, full extension, Touch Release

**Material:**
Slide elements: Cold rolled steel, bright zinc-plated.
Ball retainers: Plastic / zinc-plated steel.
Balls: Hardened steel.

Telescopic precision ball bearing slides for applications in the industrial and electronics sector.
- Operation by pressing on the drawer. (Grip or knob not required).
- Fast Disconnect.
- Hold-in in the closed position.
- Setting cams for drawer (3.1 mm).
- Very high service life up to 80,000 cycles.

Required compressive force approx. 50 N.

***Touch Release - Opens by pressing, for drawers completely without grip or knob.***

**Ordering Details: e.g.: Product No. 649 013 30, Slides DZ 3832 TR**

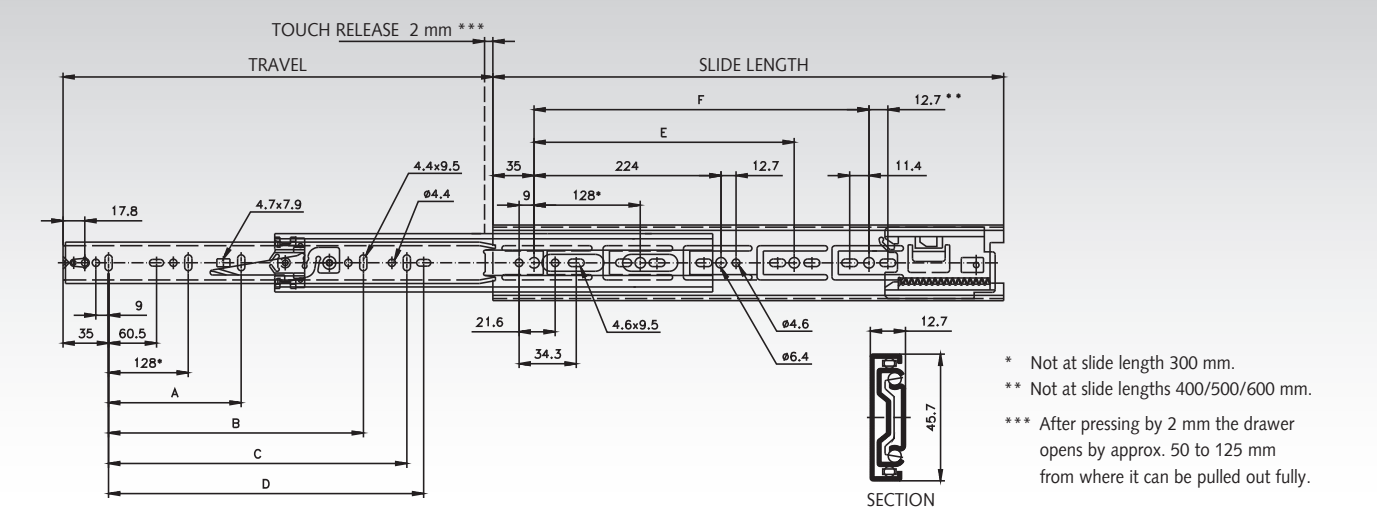


* Not at slide length 300 mm.
** Not at slide lengths 400/500/600 mm.
*** After pressing by 2 mm the drawer opens by approx. 50 to 125 mm from where it can be pulled out fully.

| Product No. per pair | Slide length mm | Travel +/-3,2 mm | A mm | B mm | C mm | D mm | E mm | F mm | Load Rating per Pair kg | Weight per Pair kg |
|---|---|---|---|---|---|---|---|---|---|---|
| **649 013 30** | 300 | 305 | - | - | - | 192 | - | - | 42 | 0,83 |
| **649 013 35** | 350 | 356 | - | - | - | 242 | - | - | 43 | 0,98 |
| **649 013 40** | 400 | 406 | - | - | - | 292 | 288 | - | 44 | 1,13 |
| **649 013 45** | 450 | 457 | - | 320 | - | 342 | 320 | - | 45 | 1,31 |
| **649 013 50** | 500 | 508 | - | 320 | - | 392 | 384 | - | 45 | 1,47 |
| **649 013 55** | 550 | 559 | 224 | 416 | - | 442 | 416 | - | 45 | 1,62 |
| **649 013 60** | 600 | 610 | 224 | 416 | - | 492 | 352 | 480 | 45 | 1,75 |
| **649 013 65** | 650 | 660 | 224 | 416 | 512 | 542 | 352 | 512 | 44 | 1,89 |
| **649 013 70** | 700 | 711 | 224 | 416 | 512 | 592 | 352 | 544 | 43 | 2,06 |

### Note

Recommended fastening: M4 screw. Use all mounting positions.
The drawer may not be wider than the slide length. Horizontal mounting is not possible.

## Slides DZ 3832 SC, Width 12.7 mm, to 50 kg, Full Extension, Self Close

**Material:**
Slide elements: Cold-rolled steel, bright zinc plated.
Ball retainers: Plastic / zinc-plated steel. Balls: Hardened steel.

Telescopic ball bearing slides for applications in the industrial and electronics sector.
- Fast disconnection.
- Hold-in in closed position.
- Cam drawer adjust (3.1 mm).
- Optional clip-on brackets for bottom or platform mounting (page 808).
- Service life 10,000 / 80,000 cycles.

Closing/opening force 14 - 27 N per slide.

**Ordering details: e.g.: Prod. No. 649 014 30, Slides DZ 3832 SC**

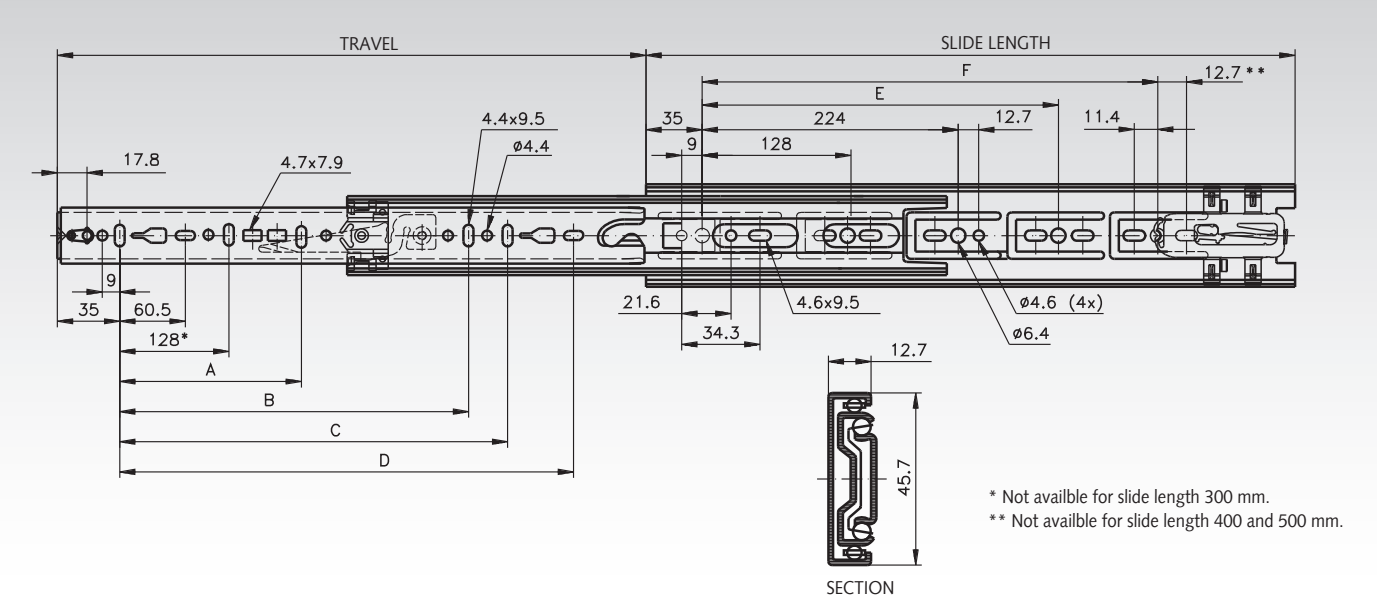


| Product No. per Pair | Slide length mm | Travel +/-3.2 mm | A mm | B mm | C mm | D mm | E mm | F mm | Load Rating[1] per Pair kg | Weight per Pair kg |
|---|---|---|---|---|---|---|---|---|---|---|
| **649 014 30** | 300 | 286 | - | - | - | 231 | - | - | 48 / 42 | 0,90 |
| **649 014 35** | 350 | 356 | - | - | - | 281 | - | - | 49 / 43 | 1,04 |
| **649 014 40** | 400 | 406 | - | - | - | 331 | 288 | - | 50 / 44 | 1,20 |
| **649 014 45** | 450 | 457 | - | 320 | - | 381 | 320 | - | 50 / 45 | 1,33 |
| **649 014 50** | 500 | 508 | - | - | - | 431 | 384 | - | 50 / 45 | 1,50 |
| **649 014 55** | 550 | 559 | - | 416 | - | 481 | 416 | - | 50 / 45 | 1,67 |
| **649 014 60** | 600 | 610 | 224 | 416 | - | 531 | 352 | 480 | 50 / 45 | 1,82 |
| **649 014 65** | 650 | 660 | 224 | 416 | 544 | 581 | 352 | 512 | 49 / 44 | 1,96 |

[1] At 10,000 / 80,000 cycles.

### Note

Recommended mounts: M4 screw. Use all mounting positions to achieve the max. load rating. Horizontal mounting not recommended. Clip-on brackets see page 808.

## Slides DZ 3832 DO, Width 12.7 mm, to 50 kg, Full Extension with Hold-In and Hold-Out

**Material:**
Slide elements: Cold-rolled steel, bright zinc plated.
Ball retainers: Plastic / zinc-plated steel.
Balls: Hardened steel.

Telescopic ball bearing slides for applications in the industrial and electronics sector.
- Fast disconnection.
- Hold-in and hold-out.
- Can be mounted on either side.
- Cam drawer adjust (3.1 mm).
- Optional clip-on bracket (page 808).
- Service life 10,000 / 80,000 cycles.

**Ordering details: e.g.: Prod. No. 649 018 25, Slides DZ 3832 DO**

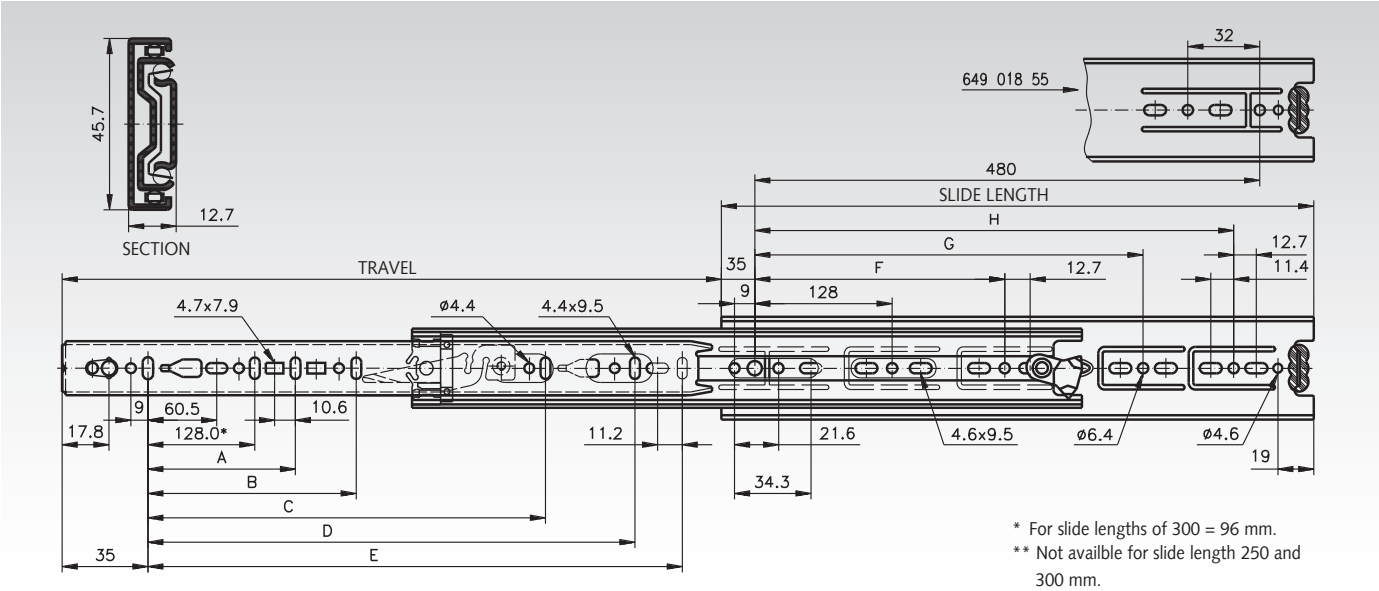


| Product No. per Pair | Slide Length mm | Travel +/-3.2 mm | A mm | B mm | C mm | D mm | E mm | F mm | G mm | H mm | Load Rating[1] per Pair kg | Weight per Pair kg |
|---|---|---|---|---|---|---|---|---|---|---|---|---|
| **649 018 25** | 250 | 243 | - | - | - | - | 192 | - | - | - | 47 / 41 | 0,77 |
| **649 018 30** | 300 | 305 | - | - | - | - | 242 | 224 | - | - | 47 / 41 | 0,91 |
| **649 018 35** | 350 | 356 | - | - | - | - | 292 | 224 | - | - | 48 / 42 | 1,07 |
| **649 018 40** | 400 | 406 | - | - | - | - | 342 | 224 | 320 | - | 49 / 43 | 1,21 |
| **649 018 45** | 450 | 457 | - | - | 320 | - | 392 | - | 352 | - | 50 / 44 | 1,37 |
| **649 018 50** | 500 | 508 | - | - | 320 | - | 442 | - | 416 | - | 50 / 45 | 1,53 |
| **649 018 55** | 550 | 559 | - | - | 320 | 416 | 492 | - | 352 | - | 50 / 45 | 1,68 |
| **649 018 60** | 600 | 610 | 224 | - | 416 | - | 542 | 224 | 352 | 480 | 50 / 45 | 1,86 |
| **649 018 65** | 650 | 660 | 224 | - | 416 | 544 | 592 | 224 | 352 | 554 | 49 / 44 | 1,97 |
| **649 018 70** | 700 | 711 | 224 | 288 | 416 | 544 | 642 | 224 | 352 | 554 | 48 / 43 | 2,17 |

[1] At 10,000 / 80,000 cycles.

### Note

Recommended mounts: M4 screw.
Use all mounting positions to achieve the max. load rating.
Horizontal mounting not recommended.

### Optional Clip-On Brackets see page 808.

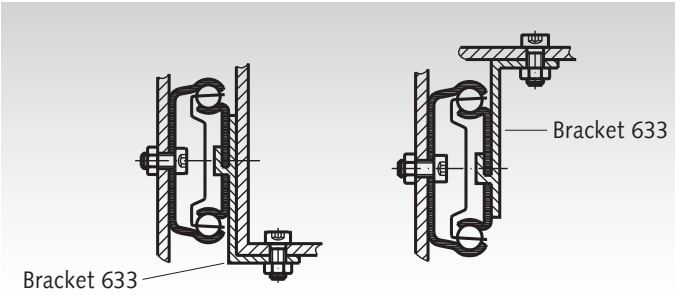

## Slides DA 5321, width 19.1 mm, up to 50 kg, Over-Extension

**Material:**
Slide elements: Aluminium.
Ball retainers and Balls: Stainless Steel.

Telescopic precision ball bearing slides for applications in the industrial and electronics sector.
- Hold-in in the closed position.
- Mounting bracket for electronic cabinets on request.
- Service life 40,000 cycles.

**Ordering Details: e.g.: Product No. 649 045 30, Slides DA 5321**

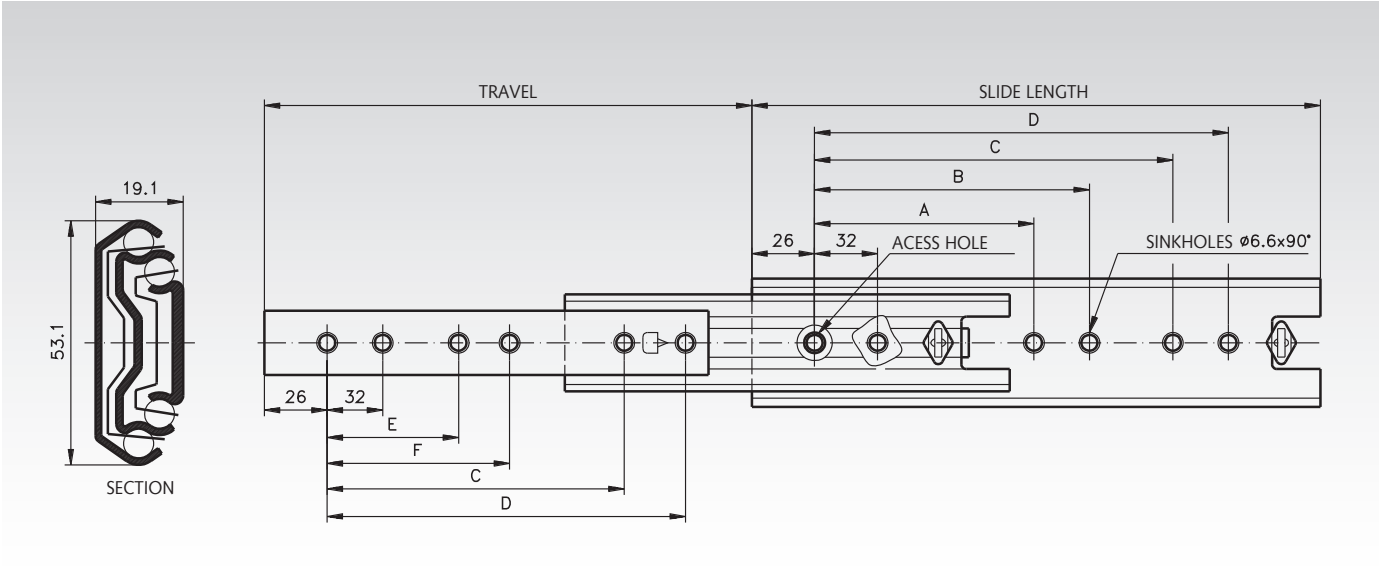


| Product No. per Pair | Slide length mm | Travel +/-3.2 mm | A mm | B mm | C mm | D mm | E mm | F mm | Load Rating per Pair kg | Weight per Pair kg |
|---|---|---|---|---|---|---|---|---|---|---|
| **649 045 30** | 300 | 324 | - | - | 192 | 224 | - | - | 40 | 0,72 |
| **649 045 35** | 350 | 374 | - | - | 224 | 256 | - | - | 43 | 0,86 |
| **649 045 40** | 400 | 424 | 160 | 192 | 288 | 320 | 128 | 160 | 45 | 0,98 |
| **649 045 45** | 450 | 474 | 160 | 192 | 320 | 352 | 128 | 160 | 48 | 1,11 |
| **649 045 50** | 500 | 524 | 192 | 224 | 384 | 416 | 160 | 192 | 50 | 1,24 |
| **649 045 55** | 550 | 574 | 192 | 224 | 416 | 448 | 160 | 192 | 50 | 1,37 |
| **649 045 60** | 600 | 624 | 256 | 288 | 480 | 512 | 192 | 256 | 50 | 1,50 |
| **649 045 65** | 650 | 674 | 256 | 288 | 544 | 576 | 192 | 256 | 50 | 1,62 |
| **649 045 70** | 700 | 724 | 288 | 320 | 576 | 608 | 256 | 288 | 50 | 1,76 |
| **649 045 80** | 790 | 804 | 352 | 384 | 672 | 704 | 320 | 352 | 40 | 2,00 |

### Note

Recommended fastening: M5/M6 screw.
Use all mounting positions to achieve the max. load rating.

Attention: Vertical mounting only.
The load capacity was tested at a slide spacing of 450mm.

**Selection Tool**
on the Internet at **www.maedler.de**
in the section **MÄDLER®-Tools**

## Slides DZ 2907, Width 9.6 mm, to 55 kg, Over Extension

**Material:**
Slide elements: Cold-rolled steel, bright zinc plated.
Ball retainers: Plastic / zinc-plated steel.
Balls: Hardened steel.

Telescopic ball bearing slides for applications in the industrial and electronics sector.
- Locks in open position.
- Fast disconnection.
- Bracket mount for electrical cabinets on request.
- Mounting accessories included.
- Service life 10,000 cycles.

Accuride

**Ordering details: e.g.: Prod. No. 649 022 12, Slides DZ 2907**

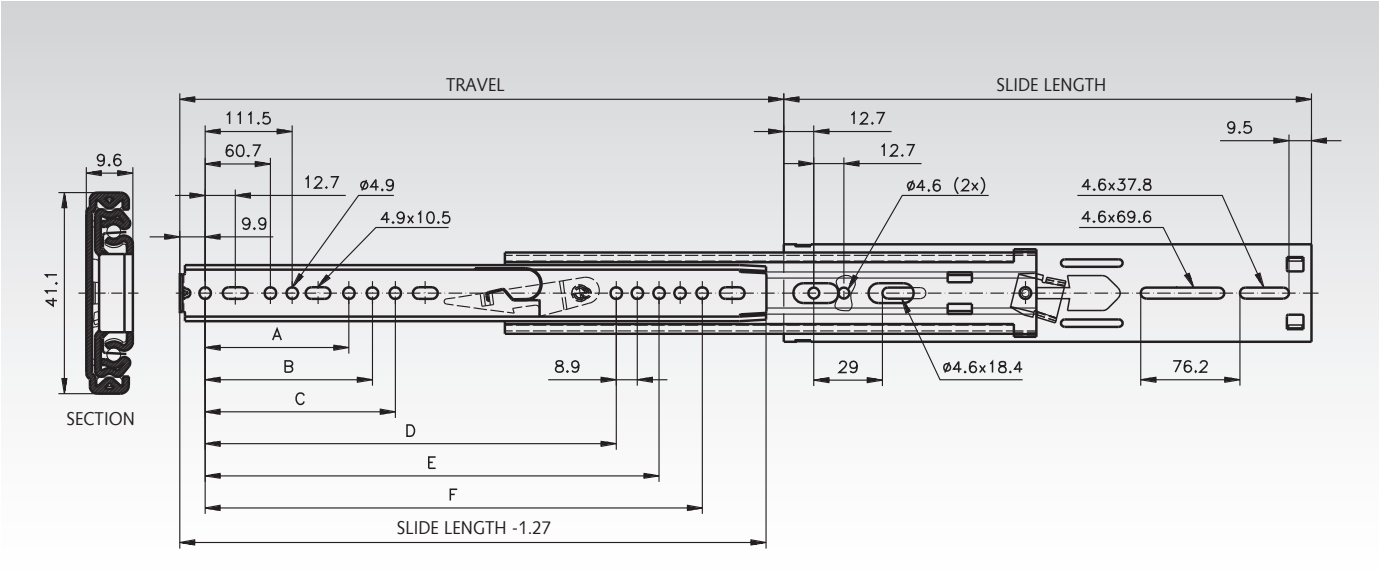


| Product No. per Pair | Slide Length mm | Travel +/-3.2 mm | A mm | B mm | C mm | D mm | E mm | F mm | Load Rating per Pair kg | Weight per Pair kg |
|---|---|---|---|---|---|---|---|---|---|---|
| **649 022 12** | 305 | 356 | - | - | - | - | - | 235,0 | 30 | 0,84 |
| **649 022 14** | 356 | 406 | - | - | - | - | - | 285,8 | 35 | 1,00 |
| **649 022 16** | 406 | 457 | 162,6 | - | - | - | - | 336,5 | 45 | 1,13 |
| **649 022 18** | 457 | 508 | - | - | 164,8 | 314,3 | - | 387,3 | 50 | 1,27 |
| **649 022 20** | 508 | 559 | - | 172,1 | 203,2 | 356,2 | - | 438,1 | 55 | 1,42 |
| **649 022 22** | 559 | 610 | - | - | 213,0 | 407,0 | - | 488,9 | 55 | 1,55 |
| **649 022 24** | 610 | 660 | 254,0 | 273,7 | - | - | 457,8 | 539,7 | 50 | 1,71 |
| **649 022 26** | 660 | 711 | 140,3 | 232,4 | 269,1 | 416,6 | 508,6 | 590,5 | 50 | 1,87 |
| **649 022 28** | 711 | 762 | 191,1 | 283,2 | 304,8 | 467,4 | 559,4 | 641,4 | 50 | 2,00 |
| **649 022 30** | 762 | 813 | - | 241,9 | 319,9 | 518,2 | 610,2 | 692,1 | 50 | 2,16 |

### Note

Recommended mounts: M4 screw.
Use all mounting positions to achieve the max. load rating.

## Slides DS 0330, Width 19.1 mm, to 80 kg, Stainless Steel, Full Extension

**Material:**
Stainless steel 1.4301.

Telescopic ball bearing slides for applications in the industrial and electronics sector.
- Hold-in in closed position.
- Can be mounted on both sides.
- Service life 10,000 / 80,000 cycles.

**Ordering details: e.g.: Prod. No. 649 446 30, Slides DS 0330**

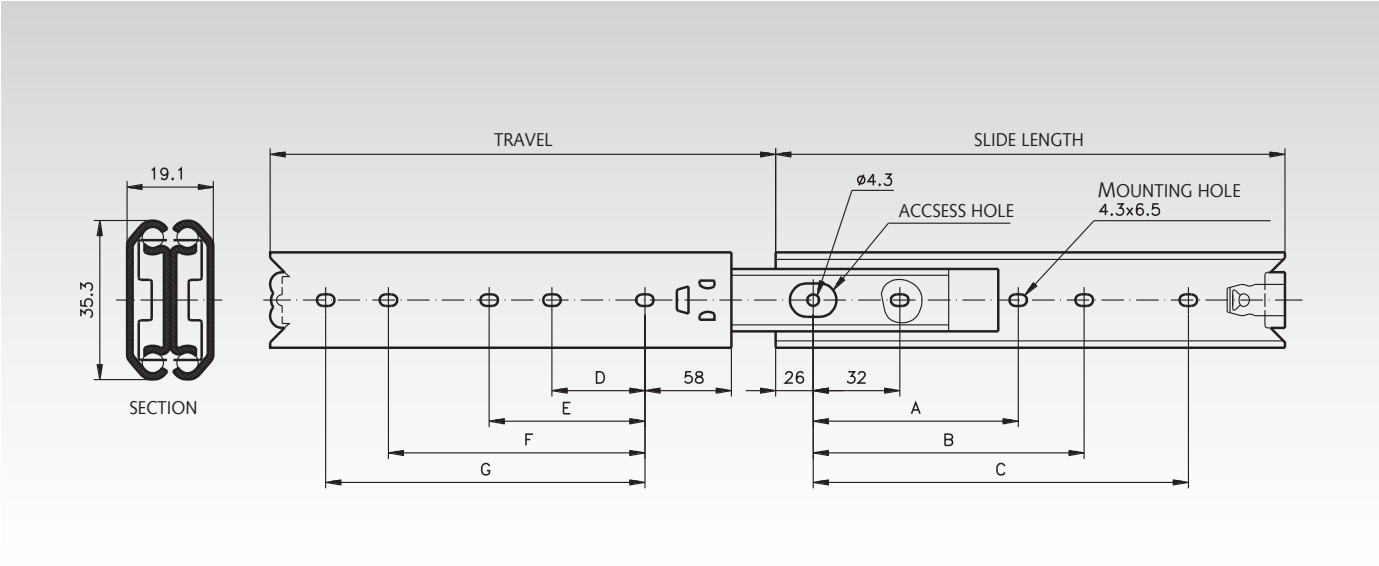


| Product No. per Pair | Slide Length mm | Travel +/-3.2 mm | A mm | B mm | C mm | D mm | E mm | F mm | G mm | Load Rating[1] per Pair kg | Weight per Pair kg |
|---|---|---|---|---|---|---|---|---|---|---|---|
| **649 446 30** | 300 | 305 | - | 192 | 242 | - | - | 192 | 224 | 65 / 50 | 1,08 |
| **649 446 35** | 350 | 354 | - | 224 | 256 | - | - | 224 | 256 | 70 / 55 | 1,29 |
| **649 446 40** | 400 | 403 | - | 192 | 320 | 160 | - | 288 | 320 | 75 / 60 | 1,48 |
| **649 446 45** | 450 | 452 | - | 224 | 352 | 192 | - | 320 | 352 | 80 / 65 | 1,66 |
| **649 446 50** | 500 | 501 | 256 | 288 | 416 | 224 | 256 | 384 | 416 | 75 / 57 | 1,86 |
| **649 446 55** | 550 | 550 | 288 | 320 | 480 | 256 | 288 | 416 | 448 | 70 / 50 | 2,07 |
| **649 446 60** | 600 | 600 | 320 | 352 | 512 | 288 | 320 | 480 | 512 | 65 / 45 | 2,26 |
| **649 446 70** | 700 | 698 | 352 | 384 | 608 | 320 | 352 | 576 | 608 | 55 / 30 | 2,67 |

[1] At 10,000 / 80,000 cycles.

### Note

Recommended mounts: M4 screw.
Use all mounting positions to achieve the max. load rating.

## Slides DZ 3301, Width 12.7 mm, to 68 kg, Over Extension

**Material:**
Slide elements: Cold-rolled steel, bright zinc plated.
Ball retainers: Cold-rolled steel, zinc-plated.
Balls: Hardened steel.

Telescopic ball bearing slides for applications in the industrial and electronics sector.
- Hold-in in closed position.
- Bracket mount for electrical cabinets on request.
- Service life 10,000 cycles.

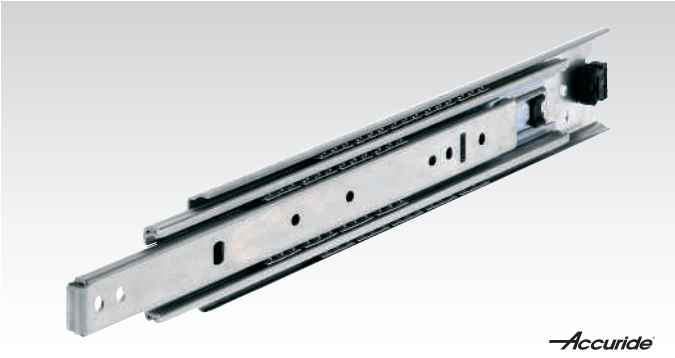


**Ordering details: e.g.: Prod. No. 649 028 12, Slides DZ 3301**

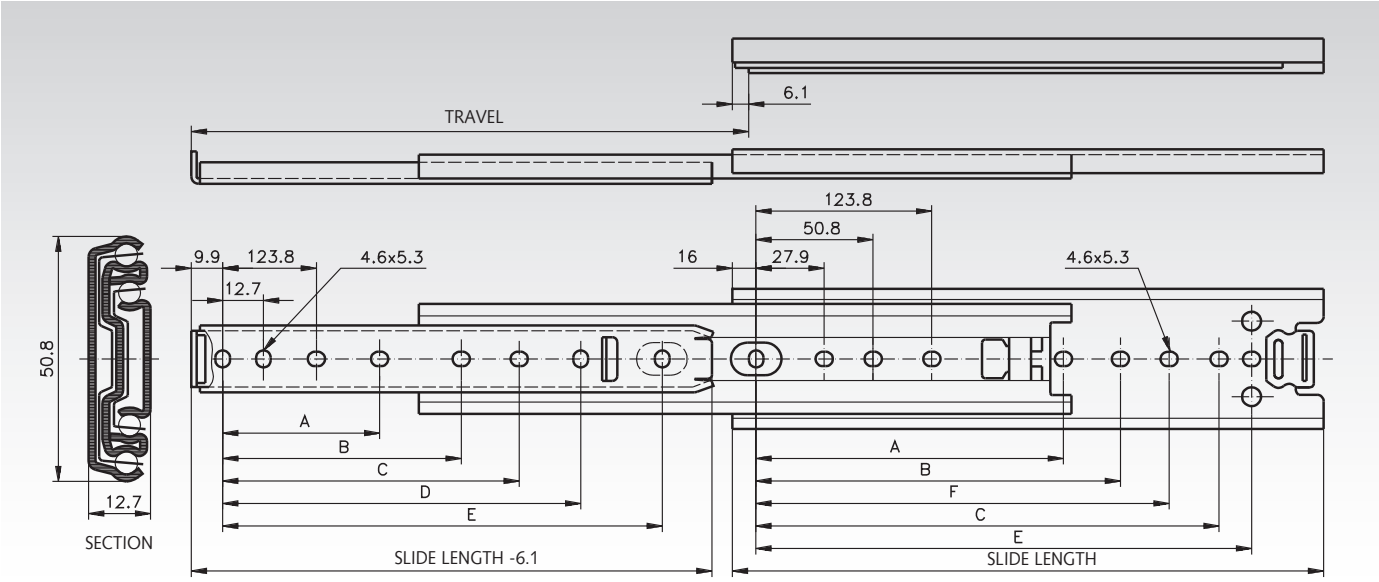


| Product No. per Pair | Slide Length mm | Travel +/-3.2 mm | A mm | B mm | C mm | D mm | E mm | F mm | Load Rating per Pair kg | Weight per Pair kg |
|---|---|---|---|---|---|---|---|---|---|---|
| **649 028 12** | 305 | 330 | - | 162,1 | 222,2 | 235,0 | 260,3 | 209,5 | 68 | 1,27 |
| **649 028 14** | 356 | 381 | - | 212,8 | 273,0 | 285,7 | 311,1 | 260,3 | 67 | 1,51 |
| **649 028 16** | 406 | 432 | - | 263,6 | 323,8 | 336,5 | 361,9 | 311,1 | 67 | 1,73 |
| **649 028 18** | 457 | 483 | 212,8 | 314,4 | 374,6 | 387,3 | 412,7 | 361,9 | 66 | 1,92 |
| **649 028 20** | 508 | 533 | 238,2 | 365,2 | 425,4 | 438,1 | 463,5 | 412,7 | 66 | 2,14 |
| **649 028 22** | 559 | 584 | 263,6 | 416,0 | 476,2 | 488,9 | 514,3 | 463,5 | 64 | 2,37 |
| **649 028 24** | 610 | 635 | 289,0 | 466,8 | 527,0 | 539,7 | 565,1 | 514,3 | 61 | 2,53 |
| **649 028 26** | 660 | 686 | 314,4 | 517,6 | 577,8 | 590,5 | 615,9 | 565,1 | 58 | 2,77 |
| **649 028 28** | 711 | 737 | 339,8 | 568,4 | 628,6 | 641,3 | 666,7 | 615,9 | 55 | 3,01 |

### Note

Recommended mounts: M4 screw.
Use all mounting positions to achieve the max. load rating.
The load capacity was tested at a slide spacing of 450mm.

## Slides DZ 3307, Width 12.7 mm, to 68 kg, Over Extension

**Material:**
Slide elements: Cold-rolled steel, bright zinc plated.
Ball retainers: Cold-rolled steel, zinc-plated.
Balls: Hardened steel.

Telescopic ball bearing slides for applications in the industrial and electronics sector.
- Fast disconnection.
- Locks in open position.
- Mounting accessories included.
- Bracket mount for electrical cabinets on request.
- Service life 10,000 cycles.

**Ordering details: e.g.: Prod. No. 649 030 12, Slides DZ 3307**

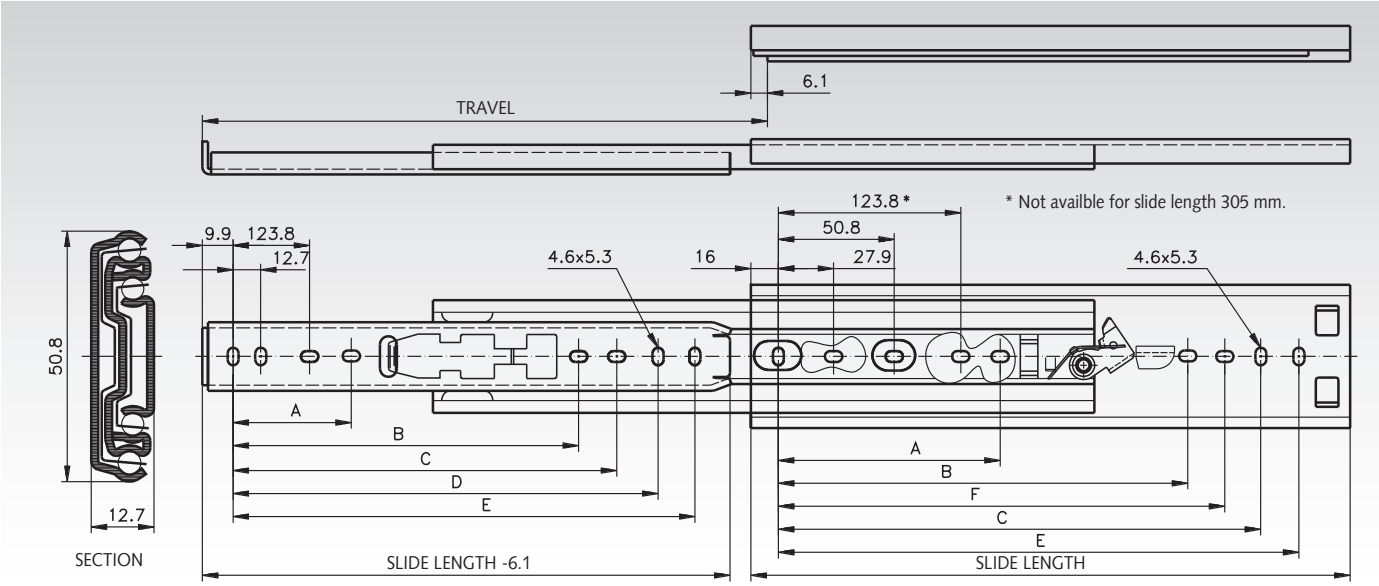


| Product No. per Pair | Slide Length mm | Travel +/-3.2 mm | A mm | B mm | C mm | D mm | E mm | F mm | Load Rating per Pair kg | Weight per Pair kg |
|---|---|---|---|---|---|---|---|---|---|---|
| **649 030 12** | 305 | 330 | - | - | 234,9 | 247,6 | 260,3 | 209,5 | 68 | 1,32 |
| **649 030 14** | 356 | 381 | - | - | 285,7 | 298,4 | 311,1 | 260,3 | 67 | 1,51 |
| **649 030 16** | 406 | 432 | - | - | 336,5 | 349,2 | 361,9 | 311,1 | 67 | 1,73 |
| **649 030 18** | 457 | 483 | 177,8 | 314,4 | 387,3 | 400,0 | 412,7 | 361,9 | 66 | 1,84 |
| **649 030 20** | 508 | 533 | 203,2 | 365,2 | 438,1 | 450,8 | 463,5 | 412,7 | 66 | 2,16 |
| **649 030 22** | 559 | 584 | 228,6 | 416,0 | 488,9 | 501,6 | 514,3 | 463,5 | 64 | 2,39 |
| **649 030 24** | 610 | 635 | 254,0 | 466,8 | 539,7 | 552,4 | 565,1 | 514,3 | 61 | 2,60 |
| **649 030 26** | 660 | 686 | 279,4 | 517,6 | 590,5 | 603,2 | 615,9 | 565,1 | 58 | 2,81 |
| **649 030 28** | 711 | 737 | 304,8 | 568,4 | 641,3 | 654,0 | 666,7 | 615,9 | 55 | 3,04 |

### Note

Recommended mounts: M4 screw.
Use all mounting positions to achieve the max. load rating.

**Selection Tool**
on the Internet at **www.maedler.de**
in the section **MÄDLER®-Tools**

## Slides DZ 3308, Width 12.7 mm, to 68 kg, Over Extension

**Material:**
Slide elements: Cold-rolled steel, bright zinc plated.
Ball retainers: Cold-rolled steel, zinc-plated.
Balls: Hardened steel.

Telescopic ball bearing slides for applications in the industrial and electronics sector.
- Fast disconnection.
- Lock-in in closed position.
- Lock-out in open position.
- Service life 10,000 cycles.

**Ordering details: e.g.: Prod. No. 649 032 12, Slides DZ 3308**

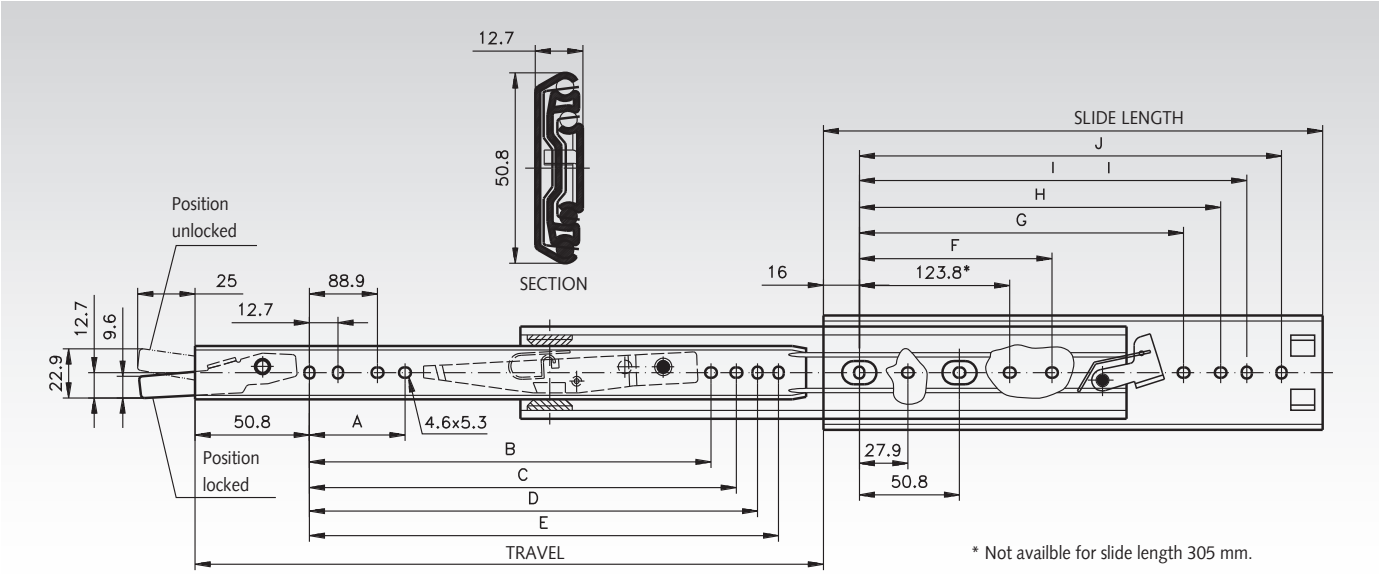


| Product No. per Pair | Slide Length mm | Travel +/-3.2 mm | A mm | B mm | C mm | D mm | E mm | F mm | G mm | H mm | I mm | J mm | Load Rating per Pair kg | Weight per Pair kg |
|---|---|---|---|---|---|---|---|---|---|---|---|---|---|---|
| **649 032 12** | 305 | 330 | - | - | 220,1 | 212,8 | 225,5 | - | - | 209,5 | 234,9 | 260,3 | 68 | 1,32 |
| **649 032 14** | 356 | 381 | - | - | 250,9 | 263,6 | 276,3 | - | - | 260,3 | 285,7 | 311,1 | 67 | 1,54 |
| **649 032 16** | 406 | 432 | - | - | 301,7 | 314,4 | 327,1 | - | - | 311,1 | 336,5 | 361,9 | 67 | 1,75 |
| **649 032 18** | 457 | 483 | 143,0 | 279,4 | 352,5 | 365,2 | 377,9 | 177,8 | 314,4 | 361,9 | 387,3 | 412,7 | 66 | 1,96 |
| **649 032 20** | 508 | 533 | 168,4 | 330,2 | 403,3 | 416,0 | 428,7 | 203,2 | 365,2 | 412,7 | 438,1 | 463,5 | 66 | 2,19 |
| **649 032 22** | 559 | 584 | 193,8 | 381,0 | 454,1 | 466,8 | 479,5 | 228,6 | 416,0 | 463,5 | 488,9 | 514,3 | 64 | 2,37 |
| **649 032 24** | 610 | 635 | 219,2 | 431,8 | 504,9 | 517,6 | 530,3 | 254,0 | 466,8 | 514,3 | 539,7 | 565,1 | 61 | 2,63 |
| **649 032 26** | 660 | 686 | 244,6 | 482,6 | 555,7 | 568,4 | 581,1 | 279,4 | 517,6 | 565,1 | 590,5 | 615,9 | 58 | 2,86 |
| **649 032 28** | 711 | 737 | 270,0 | 533,4 | 606,5 | 619,2 | 631,9 | 304,8 | 568,4 | 615,9 | 641,3 | 666,7 | 55 | 3,05 |

### Note

Recommended mounts: M4 screw.
Use all mounting positions to achieve the max. load rating.

## Slides DZ 0305, Width 19.1 mm, to 70 kg, Over Extension

**Material:**
Slide elements: Cold-rolled steel, bright zinc plated.
Ball retainers: Cold-rolled steel, zinc-plated.
Balls: Hardened steel.

Telescopic ball bearing slides for applications in the industrial and electronics sector.
- Locks in open position.
- Fast disconnection.
- Bracket mount for electrical cabinets on request.
- Service life 10,000 cycles.

**Ordering details: e.g.: Prod. No. 649 024 12, Slides DZ 0305**

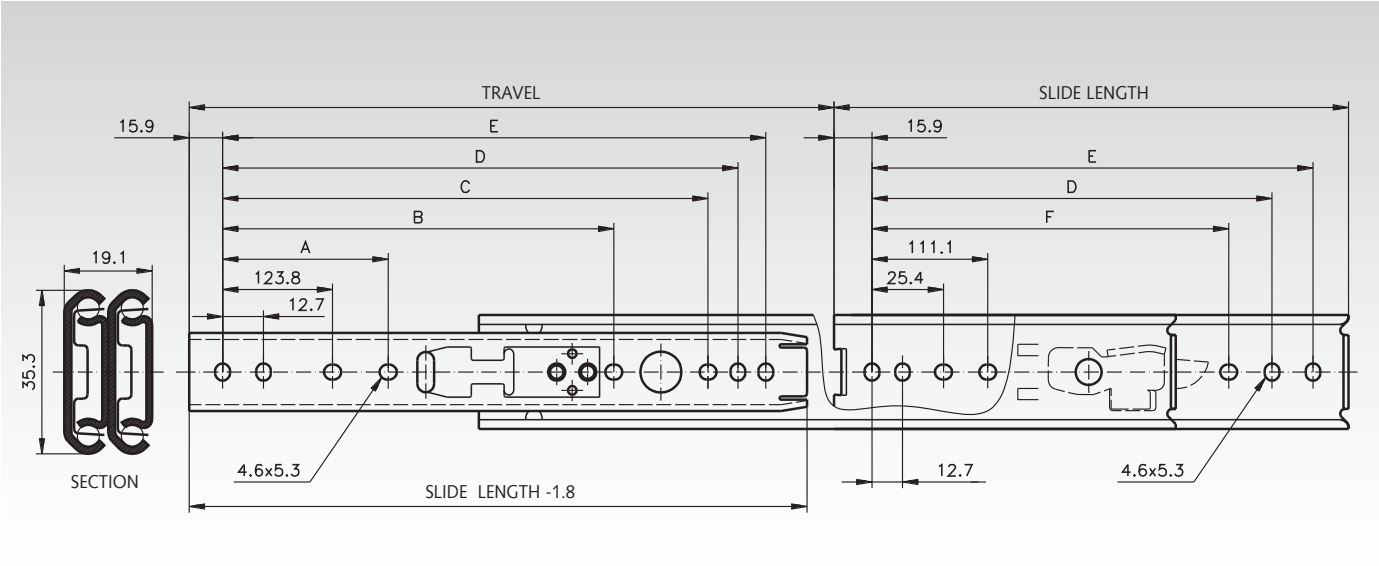


| Product No. per Pair | Slide Length mm | Travel +/-3.2 mm | A mm | B mm | C mm | D mm | E mm | F mm | Load Rating per Pair kg | Weight per Pair kg |
|---|---|---|---|---|---|---|---|---|---|---|
| **649 024 12** | 305 | 327 | - | - | - | 260,3 | 273,0 | - | 70 | 1,27 |
| **649 024 14** | 356 | 378 | - | - | 298,4 | 311,1 | 323,8 | - | 68 | 1,46 |
| **649 024 16** | 406 | 429 | - | - | 349,2 | 361,9 | 374,6 | 250,8 | 65 | 1,63 |
| **649 024 18** | 457 | 480 | 212,7 | - | 400,0 | 412,7 | 425,4 | 301,6 | 62 | 1,88 |
| **649 024 20** | 508 | 531 | 238,1 | 365,2 | 450,8 | 463,5 | 476,2 | 352,4 | 57 | 2,04 |
| **649 024 22** | 559 | 581 | 263,5 | 415,9 | 501,6 | 514,3 | 527,0 | 403,2 | 52 | 2,29 |
| **649 024 24** | 610 | 632 | 288,9 | 466,7 | 552,4 | 565,1 | 577,8 | 454,0 | 46 | 2,50 |
| **649 024 26** | 660 | 683 | 314,3 | 517,7 | 603,2 | 615,9 | 628,6 | 504,8 | 41 | 2,67 |
| **649 024 28** | 711 | 734 | 339,7 | 568,3 | 654,0 | 666,7 | 679,4 | 555,6 | 36 | 2,89 |

### Note

Recommended mounts: M4 screw.
Use all mounting positions to achieve the max. load rating.

## Slides DZ 0301, Width 19.1 mm, to 70 kg, Over Extension

**Material:**
Slide elements: Cold-rolled steel, bright zinc plated.
Ball retainers: Cold-rolled steel, zinc-plated.
Balls: Hardened steel.

Telescopic ball bearing slides for applications in the industrial and electronics sector.

- Low slide profile (only 35.3 mm).
- Bracket mount for electrical cabinets on request.
- Service life 10,000 cycles.

**Ordering details: e.g.: Prod. No. 649 034 12, Slides DZ 0301**

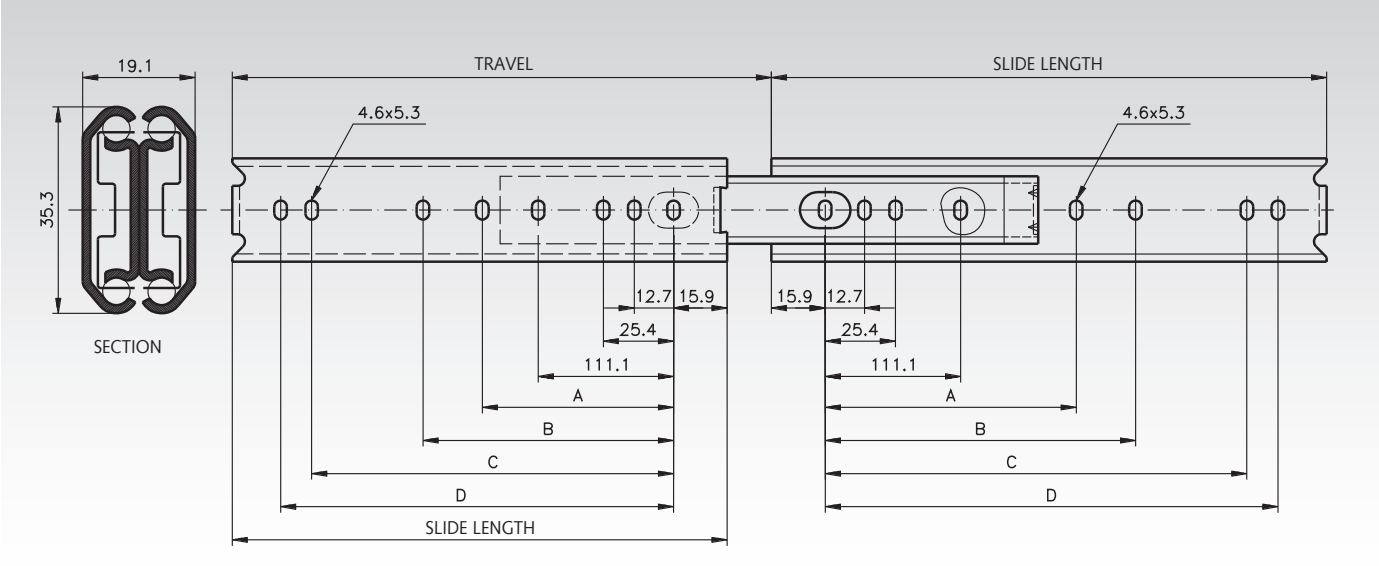


| Product No. per Pair | Slide Length mm | Travel +/-3.2 mm | A mm | B mm | C mm | D mm | Load Rating per Pair kg | Weight per Pair kg |
|---|---|---|---|---|---|---|---|---|
| **649 034 12** | 305 | 327 | - | 149,2 | 260,3 | 273,0 | 70 | 1,38 |
| **649 034 14** | 356 | 378 | - | 200,0 | 311,1 | 323,8 | 67 | 1,63 |
| **649 034 16** | 406 | 429 | - | 250,8 | 361,9 | 374,6 | 65 | 1,87 |
| **649 034 18** | 457 | 480 | 212,7 | 301,6 | 412,7 | 425,4 | 63 | 2,10 |
| **649 034 20** | 508 | 530 | 238,1 | 352,4 | 463,5 | 476,2 | 60 | 2,35 |
| **649 034 22** | 559 | 581 | 263,5 | 403,2 | 514,3 | 527,0 | 55 | 2,60 |
| **649 034 24** | 610 | 632 | 288,9 | 454,0 | 565,1 | 577,8 | 50 | 2,77 |
| **649 034 26** | 660 | 683 | 314,3 | 504,8 | 615,9 | 628,6 | 45 | 2,55 |
| **649 034 28** | 711 | 734 | 339,7 | 555,6 | 666,7 | 679,4 | 40 | 3,22 |

### Note

Recommended mounts: M4 screw.
Use all mounting positions to achieve the max. load rating.

## Slides DS 3031, Width 19.1 mm, to 80 kg, Stainless Steel, Over Extension

**Material:** Stainless steel 1.4301.

STAINLESS

Telescopic ball bearing slides for applications also at high temperature areas.

- High temperatur food-grade grease.
- Suitable for temperature up to +300°C.
- Ideal for environments where mild steel might corrode.
- Service life 10,000 cycles.

**Ordering details: e.g.: Prod. No. 649 035 30, Slides DS 3031**

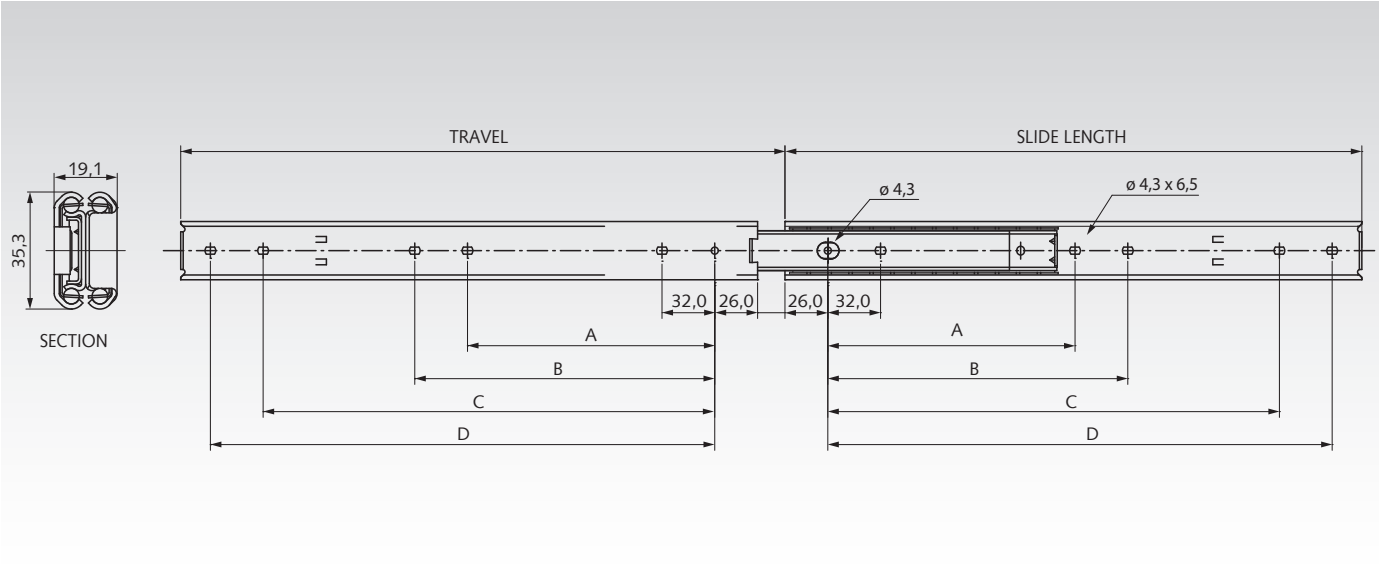


| Product No. per Pair | Slide Length mm | Travel +/-3.2 mm | A mm | B mm | C mm | D mm | Load Rating per Pair kg | Weight per Pair kg |
|---|---|---|---|---|---|---|---|---|
| **649 035 30** | 300 | 317 | - | - | 224 | 256 | 65 | 1,53 |
| **649 035 35** | 350 | 367 | - | - | 256 | 288 | 70 | 1,72 |
| **649 035 40** | 400 | 416 | - | 192 | 320 | 352 | 75 | 1,91 |
| **649 035 45** | 450 | 465 | - | 224 | 352 | 384 | 80 | 2,10 |
| **649 035 50** | 500 | 514 | 256 | 288 | 416 | 448 | 75 | 2,29 |
| **649 035 55** | 550 | 563 | 288 | 320 | 480 | 512 | 70 | 2,48 |
| **649 035 60** | 600 | 613 | 320 | 352 | 512 | 544 | 65 | 2,67 |
| **649 035 65** | 650 | 662 | 320 | 352 | 576 | 608 | 60 | 2,86 |
| **649 035 70** | 700 | 711 | 352 | 384 | 608 | 640 | 55 | 3,05 |

### Note

Recommended mounts: M4 screw, max. head height 2.5mm, max. head Ø 9.6mm.
Use all mounting positions to achieve the max. load rating.

**Selection Tool**
on the Internet at **www.maedler.de**
in the section **MÄDLER®-Tools**

## Slides DZ 5417, width 19.1 mm, up to 100 kg, Over-Extension

**Material:**
Slide elements: Cold-rolled, bright zinc-plated steel.
Ball retainers: Cold rolled steel, zinc-plated.
Balls: Hardened steel.

Telescopic precision ball bearing slides for applications in the industrial and electronics sector.
- Hold-in in the closed position.
- Service life 10,000 cycles.

**Ordering Details: e.g.: Product No. 649 049 30, Slides DZ 5417**

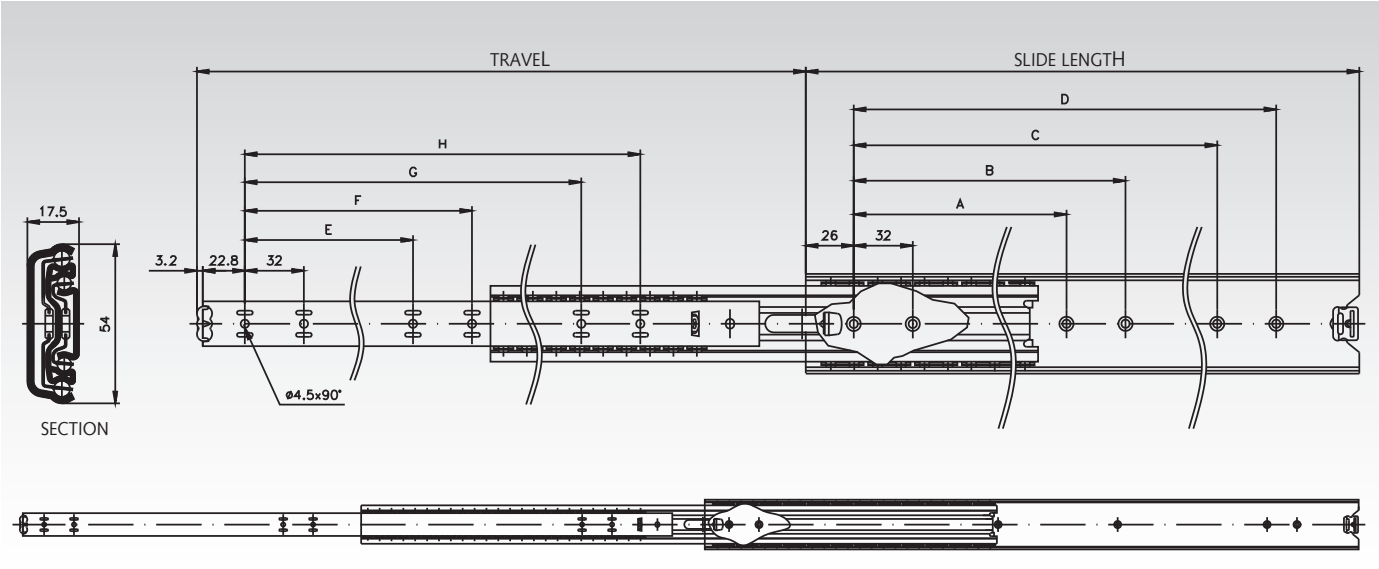


| Product No. per Pair | Slide length mm | Travel +/-3,2 mm | A mm | B mm | C mm | D mm | E mm | F mm | G mm | H mm | Load Rating kg | Weight per Pair kg |
|---|---|---|---|---|---|---|---|---|---|---|---|---|
| **649 049 30** | 300 | 340 | - | - | 224 | 256 | - | - | - | 256 | 90 | 1,64 |
| **649 049 35** | 350 | 389 | - | - | 224 | 256 | - | - | - | 256 | 90 | 1,93 |
| **649 049 40** | 400 | 438 | 160 | 192 | 320 | 352 | 128 | 160 | - | 352 | 92 | 2,22 |
| **649 049 45** | 450 | 487 | 160 | 192 | 320 | 352 | 128 | 160 | 320 | 352 | 95 | 2,53 |
| **649 049 50** | 500 | 537 | 192 | 224 | 416 | 448 | 160 | 192 | - | 416 | 100 | 2,81 |
| **649 049 55** | 550 | 586 | 224 | - | 448 | 480 | 160 | 192 | - | 448 | 100 | 3,12 |
| **649 049 60** | 600 | 635 | 256 | 288 | 480 | 512 | 192 | 224 | 480 | 512 | 94 | 3,41 |
| **649 049 65** | 650 | 684 | 288 | 320 | 544 | 576 | 192 | 256 | - | 544 | 92 | 3,68 |
| **649 049 70** | 700 | 733 | 288 | 416 | 576 | 608 | 256 | 288 | 576 | 608 | 90 | 4,00 |

### Note

Recommended fastening: M4 screw.
Use all mounting positions to achieve the max. load rating.

## Slides DS 5322, Width 20.7 mm, to 120 kg, Stainless Steel, Over Extension

**Material:** Stainless steel 1.4301.

STAINLESS

Telescopic ball bearing slides for applications in the industrial and electronics sector.
- Ideal for for environments where mild steel might corrode.
- Hold-in in closed position.
- Easily mounted brackets with bolts.
- Especially long service life, up to 80,000 cycles.

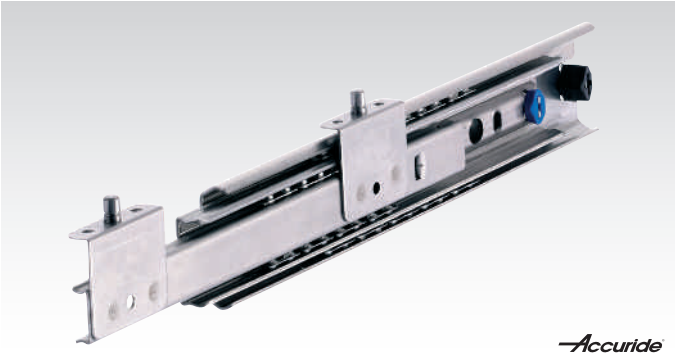


**Ordering details: e.g.: Prod. No. 649 048 30, Slides DS 5322**

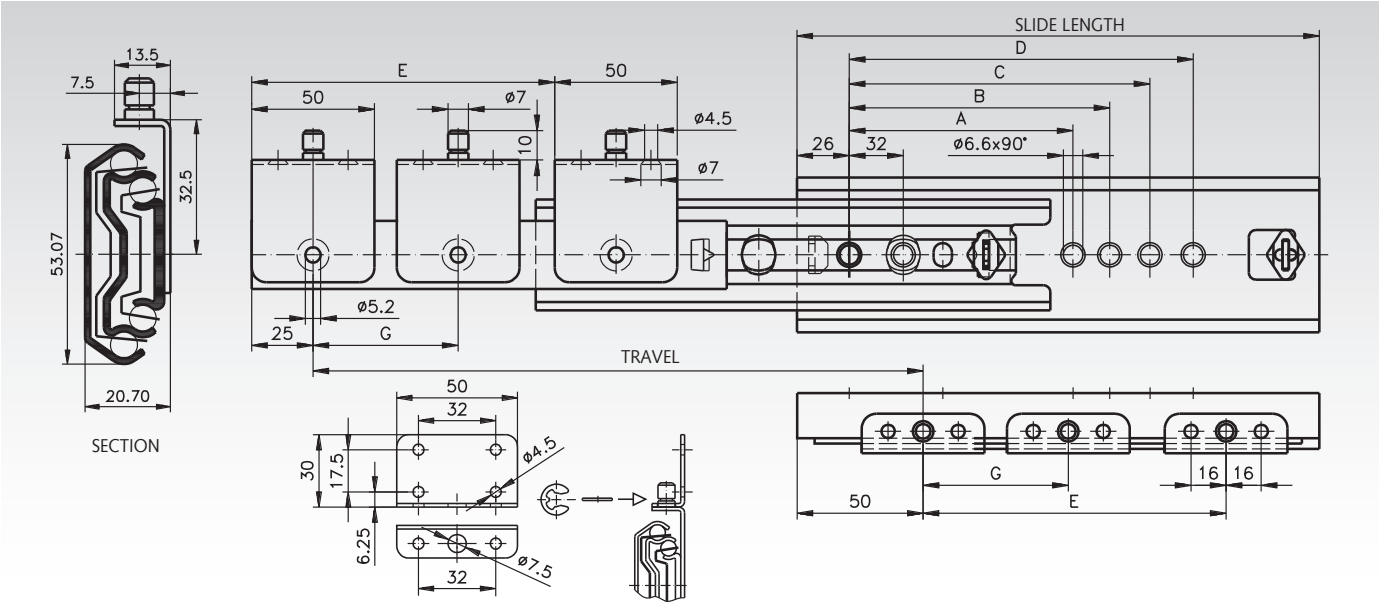


| Product No. per Pair | Slide Length mm | Travel +/-3.2 mm | A mm | B mm | C mm | D mm | E mm | G mm | Load Rating per Pair kg | Weight per Pair kg |
|---|---|---|---|---|---|---|---|---|---|---|
| **649 048 30** | 300 | 342 | - | - | 192 | 224 | 177 | - | 80 | 1,83 |
| **649 048 35** | 350 | 392 | - | - | 256 | 288 | 227 | - | 90 | 2,15 |
| **649 048 40** | 400 | 442 | 160 | 192 | 288 | 320 | 277 | - | 100 | 2,45 |
| **649 048 45** | 450 | 492 | 192 | 224 | 352 | 384 | 327 | - | 110 | 2,74 |
| **649 048 50** | 500 | 542 | 192 | 224 | 384 | 416 | 377 | - | 120 | 3,04 |
| **649 048 55** | 550 | 592 | 224 | 256 | 448 | 480 | 427 | - | 110 | 3,33 |
| **649 048 60** | 600 | 642 | 256 | 288 | 480 | 512 | 477 | 238,5 | 100 | 3,74 |
| **649 048 70** | 700 | 742 | 320 | 352 | 608 | 640 | 577 | 288,5 | 70 | 4,37 |
| **649 048 80** | 790 | 822 | 352 | 384 | 672 | 704 | 677 | 338,5 | 50 | 4,92 |

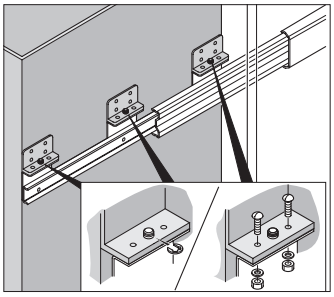

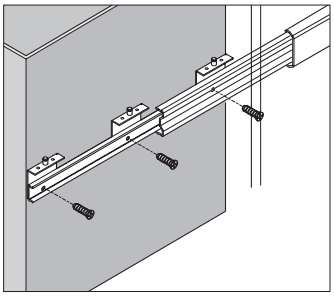

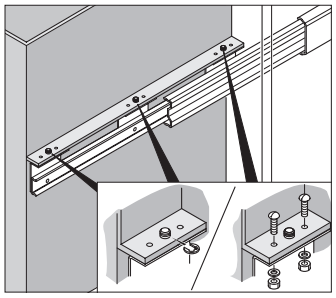

### Note

Recommended mount: M5/M6 screw.
Use all mounting positions to achieve the max. load rating.

## Slides DZ 3607, Width 19.1 mm, to 120 kg, Full Extension

**Material:**
Slide elements: Cold-rolled steel, bright zinc plated.
Ball retainers: Cold-rolled steel, zinc-plated.
Balls: Hardened steel.

Telescopic ball bearing slides for applications in the industrial and electronics sector.
- Lock-out in open position
- Fast disconnection.
- Mountings included.
- Bracket mount for electrical cabinets on request.
- Service life 10,000 cycles.

Accuride

**Ordering details: e.g.: Prod. No. 649 038 12, Slides DZ 3607**

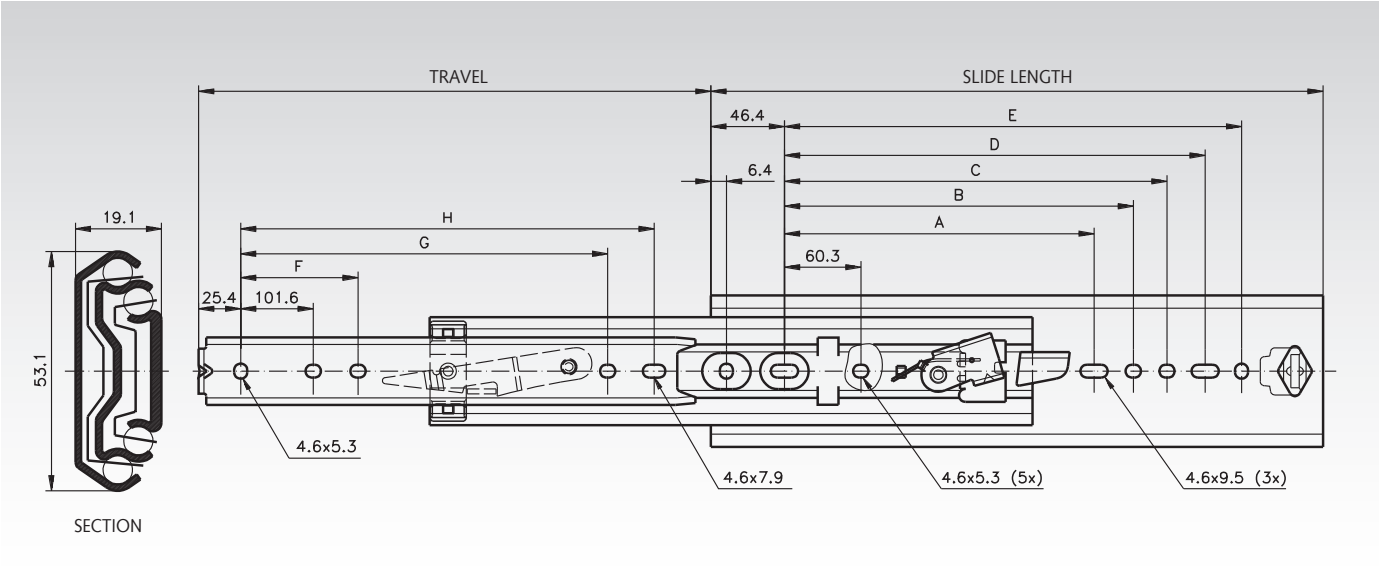


| Product No. per Pair | Slide Length mm | Travel +/-3.2 mm | A mm | B mm | C mm | D mm | E mm | F mm | G mm | H mm | Load Rating per Pair kg | Weight per Pair kg |
|---|---|---|---|---|---|---|---|---|---|---|---|---|
| **649 038 12** | 305 | 305 | - | 135,4 | 179,1 | 204,5 | 229,9 | - | - | 228,6 | 90 | 1,79 |
| **649 038 14** | 356 | 356 | - | 186,2 | 229,9 | 255,3 | 280,7 | - | - | 279,4 | 90 | 2,08 |
| **649 038 16** | 406 | 406 | - | 237,0 | 280,7 | 306,1 | 331,5 | - | 257,3 | 330,2 | 100 | 2,50 |
| **649 038 18** | 457 | 457 | - | 287,8 | 331,5 | 356,9 | 382,3 | - | 308,1 | 381,0 | 110 | 2,71 |
| **649 038 20** | 508 | 508 | 215,9 | 338,6 | 382,3 | 407,7 | 433,1 | 203,2 | 358,9 | 431,8 | 120 | 3,02 |
| **649 038 22** | 559 | 559 | 241,3 | 389,4 | 433,1 | 458,5 | 483,9 | 228,6 | 409,7 | 482,6 | 110 | 3,32 |
| **649 038 24** | 610 | 610 | 266,7 | 440,2 | 483,9 | 509,3 | 534,7 | 254,0 | 460,5 | 533,4 | 100 | 3,63 |
| **649 038 26** | 660 | 660 | 292,1 | 491,0 | 534,7 | 560,1 | 585,5 | 279,4 | 511,3 | 584,2 | 92 | 3,95 |
| **649 038 28** | 711 | 711 | 317,5 | 541,8 | 585,5 | 610,9 | 636,3 | 304,8 | 562,1 | 635,0 | 83 | 4,22 |

### Note

Side-specific slide assembly: Levers move in same direction when pair of slides is installed.

Recommended mounts: M4 screw.
Use all mounting positions to achieve the max. load rating.

Attention: Vertical mounting only.

## Slides DZ 7957, Width 19.1 mm, to 160 kg, Full Extension

**Material:**
Slide elements: Cold rolled steel, bright zinc-plated.
Ball retainers: Cold rolled steel, zinc-plated.
Balls: Hardened steel.

Telescopic precision ball bearing slides for applications in the industrial and electronics sector.
- Suitable for drawers up to 1000mm wide at high load.
- Fast Disconnect.
- Optional Clip-On Brackets (page 808).
- Very high service life up to 80,000 cycles.

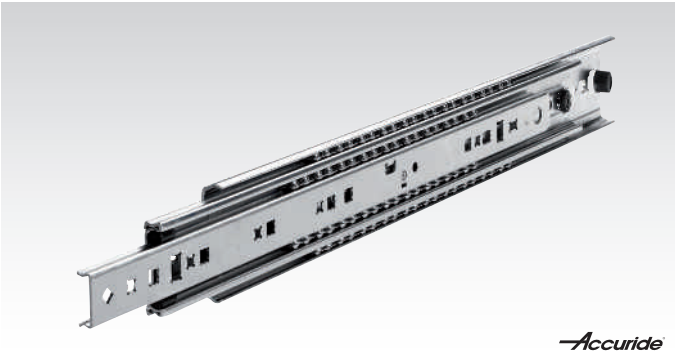


**Ordering details: e.g.: Prod. No. 649 039 12, Slides DZ 7957**

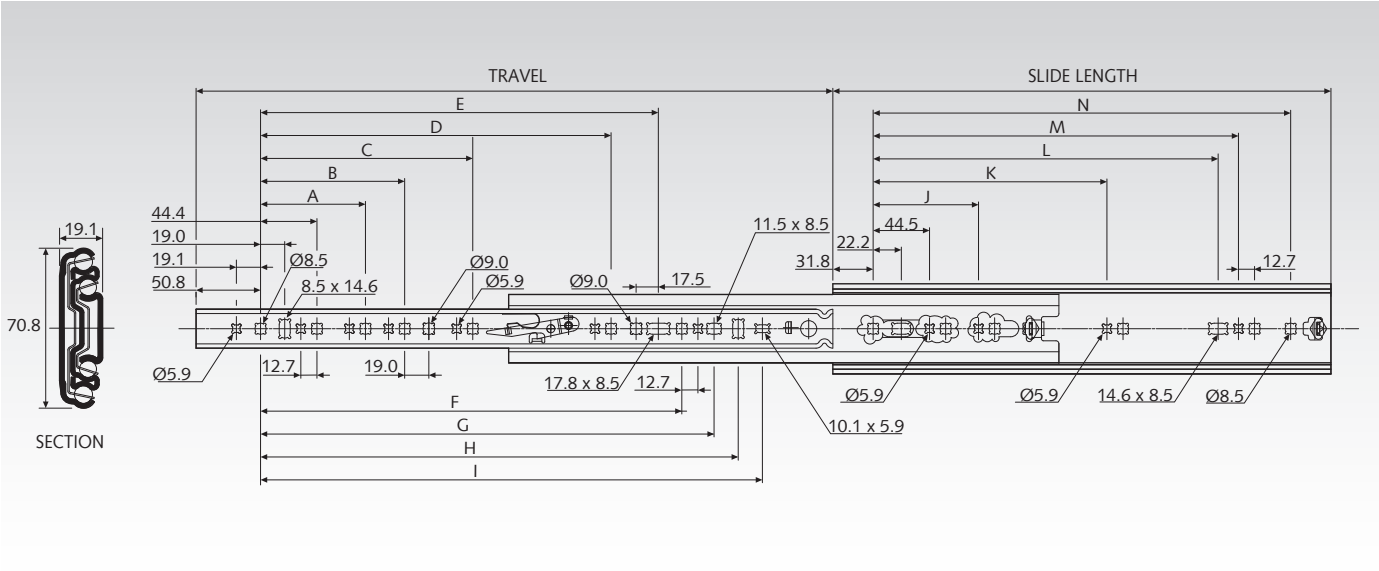


| Product No. per Pair | Slide Length mm | Travel +/-3.2 mm | A mm | B mm | C mm | D mm | E mm | F mm | G mm | H mm | I mm | J mm | K mm | L mm | M mm | N mm | Load Rating Pair kg | Weight Pair kg |
|---|---|---|---|---|---|---|---|---|---|---|---|---|---|---|---|---|---|---|
| **649 039 12** | 305 | 305 | - | - | - | - | - | - | - | 179,4 | 198,5 | - | - | 184,2 | 200,2 | 241,3 | 140 | 2,38 |
| **649 039 14** | 356 | 356 | - | - | - | - | - | - | - | 230,2 | 249,3 | - | - | 235,0 | 251,0 | 292,1 | 140 | 2,80 |
| **649 039 16** | 406 | 406 | 108 | - | - | - | - | 236,6 | 262,0 | 281,0 | 300,1 | - | - | 285,8 | 301,8 | 342,9 | 150 | 3,19 |
| **649 039 18** | 457 | 457 | 108 | - | - | - | - | 287,4 | 312,8 | 331,8 | 350,9 | - | - | 336,6 | 352,6 | 393,7 | 150 | 3,62 |
| **649 039 20** | 508 | 508 | 108 | 171,5 | - | - | - | 338,2 | 363,6 | 382,6 | 401,7 | - | - | 387,4 | 403,4 | 444,5 | 160 | 4,03 |
| **649 039 22** | 559 | 559 | 108 | 171,5 | - | - | 328,7 | 389,0 | 414,4 | 433,4 | 452,5 | - | - | 438,2 | 454,2 | 495,3 | 160 | 4,42 |
| **649 039 24** | 610 | 610 | 108 | 171,5 | - | - | 379,5 | 439,8 | 465,2 | 484,2 | 503,3 | - | - | 489,0 | 505,0 | 546,1 | 160 | 4,84 |
| **649 039 26** | 660 | 660 | 108 | 171,5 | - | - | 430,3 | 490,6 | 516,0 | 535,0 | 554,1 | - | - | 539,8 | 555,8 | 596,9 | 160 | 5,27 |
| **649 039 28** | 711 | 711 | 108 | 171,5 | - | - | 481,1 | 541,4 | 566,8 | 585,8 | 604,9 | - | - | 590,6 | 606,6 | 647,7 | 160 | 5,88 |
| **649 039 30** | 762 | 762 | 108 | 171,5 | - | - | 531,9 | 592,2 | 617,6 | 636,6 | 655,7 | 203,2 | 469,9 | 641,4 | 657,4 | 698,5 | 160 | 6,06 |
| **649 039 32** | 813 | 813 | 108 | 171,5 | - | - | 582,7 | 643,0 | 688,4 | 687,4 | 706,5 | 203,2 | 520,7 | 692,2 | 708,2 | 749,3 | 160 | 6,48 |
| **649 039 34** | 864 | 864 | 108 | 171,5 | 349,3 | - | 633,5 | 693,8 | 719,2 | 738,2 | 757,3 | 203,2 | 571,5 | 743,0 | 759,0 | 800,1 | 160 | 6,88 |
| **649 039 36** | 914 | 914 | 108 | 171,5 | 349,3 | 501,7 | 684,3 | 744,6 | 770,0 | 789,0 | 808,1 | 203,2 | 622,3 | 793,8 | 809,8 | 850,9 | 160 | 7,29 |

### Note

Recommended mounts: M5/M6 screw.
Use all mounting positions to achieve the max. load rating.

Handed slide assembly: Levers for front disconnection move in same direction.

For bracket accessory kit see page 808. The fixings included willnot fit the 7957 slide. We recommend M6 countersunk screws.

**Selection Tool**
on the Internet at **www.maedler.de**
in the section **MÄDLER®-Tools**

## Slides DZ 5321 SC, Width 19.1 mm, to 120 kg, Over Extension

**Material:**
Slide elements: Cold-rolled steel, bright zinc plated.
Ball retainers: Cold-rolled steel, zinc-plated.
Balls: Hardened steel.

Telescopic ball bearing slides for applications in the industrial and electronics sector.
- Self Close.
- Hold-in in closed position.
- Bracket mount for electrical cabinets on request.
- Service life 10,000 cycles.

**Ordering details: e.g.: Prod. No. 649 042 30, Slides DZ 5321 SC**

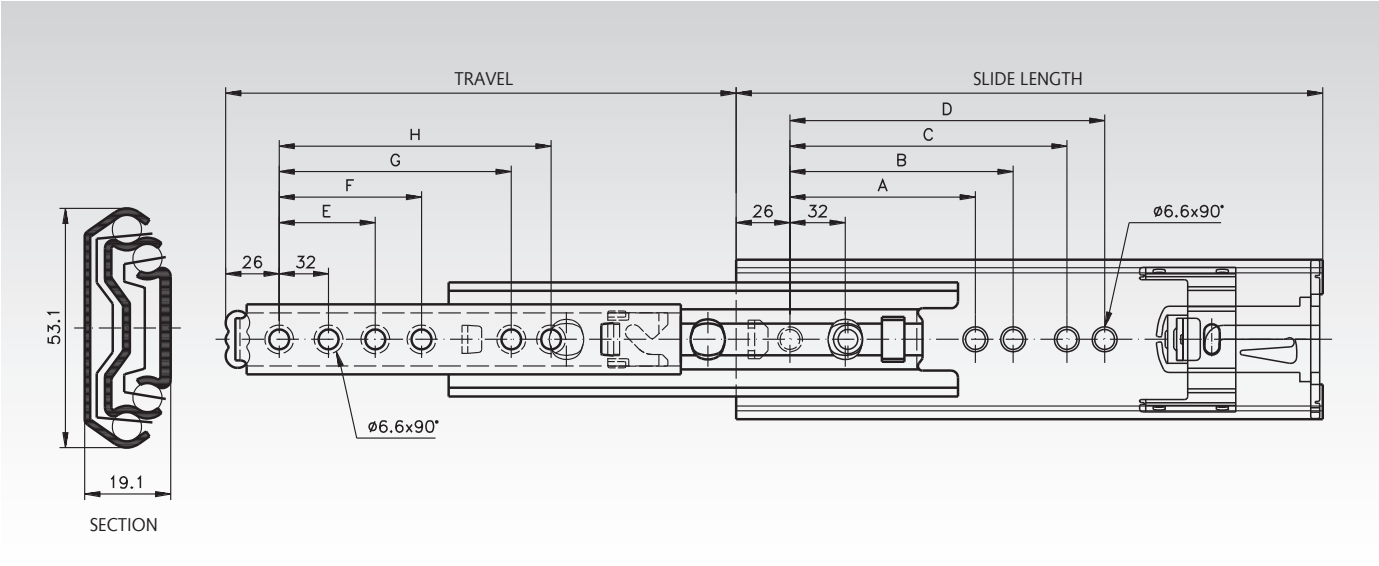


| Product No. per Pair | Slide Length mm | Travel +/-3.2 mm | A mm | B mm | C mm | D mm | E mm | F mm | G mm | H mm | Load Rating per Pair kg | Weight per Pair kg |
|---|---|---|---|---|---|---|---|---|---|---|---|---|
| **649 042 30** | 300 | 319 | - | - | 160 | 192 | - | - | 192 | 224 | 85 | 1,64 |
| **649 042 35** | 350 | 369 | - | - | 224 | 256 | - | - | 224 | 256 | 90 | 1,96 |
| **649 042 40** | 400 | 419 | 160 | 192 | 256 | 288 | 160 | 192 | 288 | 320 | 100 | 2,25 |
| **649 042 45** | 450 | 469 | 192 | 224 | 320 | 352 | 192 | 224 | 352 | 384 | 110 | 2,57 |
| **649 042 50** | 500 | 519 | 224 | 256 | 352 | 384 | 224 | 256 | 384 | 416 | 120 | 2,87 |
| **649 042 55** | 550 | 569 | 224 | 256 | 416 | 448 | 224 | 256 | 448 | 480 | 110 | 3,17 |
| **649 042 60** | 600 | 619 | 256 | 288 | 480 | 512 | 256 | 288 | 480 | 512 | 100 | 3,48 |
| **649 042 70** | 700 | 719 | 320 | 352 | 544 | 576 | 320 | 352 | 576 | 608 | 70 | 4,10 |
| **649 042 80** | 790 | 823 | 352 | 384 | 640 | 672 | 352 | 384 | 672 | 704 | 50 | 4,64 |

### Note

Recommended mount: M5/M6 screw.
Use all mounting positions to achieve the max. load rating.

## Slides DZ / DS 5321, width 19.1 mm, up to 170 kg, Over-Extension

**Material Type DZ 5321:**
Slide elements: Cold-rolled, bright zinc-plated steel.
Ball retainers: Cold rolled steel, zinc-plated.
Balls: Hardened steel.

**Material Type DS 5321:**
Stainless steel 1.4301.

Telescopic precision ball bearing slides for applications in the industrial and electronics sector.
- Hold-in in the closed position.
- Mounting bracket for electronic cabinets on request.
- Service life 10,000 / 80,000 cycles.

**Ordering Details: e.g.: Product No. 649 040 30, Slides DZ 5321**

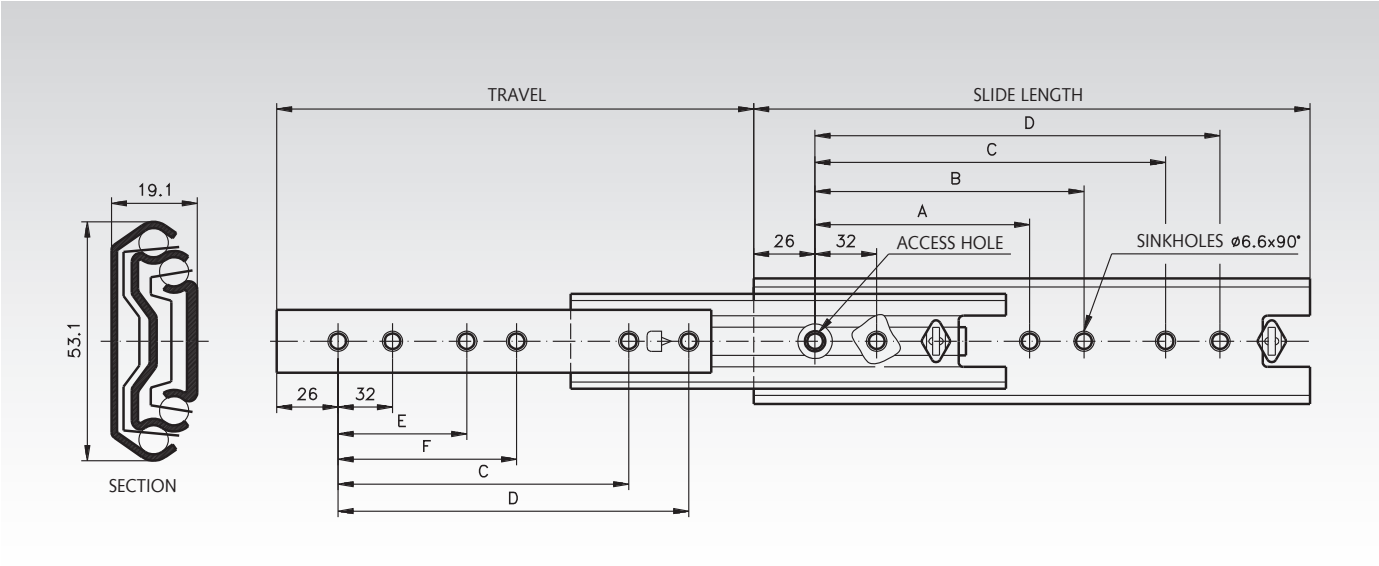


| Product No. per pair DZ 5321 | Product No. per pair DS 5321 | Slide length mm | Travel +/-3,2 mm | A mm | B mm | C mm | D mm | E mm | F mm | Load Rating[1] per pair kg | Weight per pair kg |
|---|---|---|---|---|---|---|---|---|---|---|---|
| **649 040 30** | **649 440 30** | 300 | 323,5 | - | - | 192 | 224 | - | - | 130 / 120 | 1,73 |
| **649 040 35** | **649 440 35** | 350 | 373,5 | - | - | 224 | 256 | - | - | 140 / 120 | 2,04 |
| **649 040 40** | **649 440 40** | 400 | 423,5 | 160 | 192 | 288 | 320 | 128 | 160 | 150 / 130 | 2,34 |
| **649 040 45** | **649 440 45** | 450 | 473,5 | 160 | 192 | 320 | 352 | 128 | 160 | 160 / 140 | 2,64 |
| **649 040 50** | **649 440 50** | 500 | 523,5 | 192 | 224 | 384 | 416 | 160 | 192 | 170 / 150 | 2,94 |
| **649 040 55** | **649 440 55** | 550 | 573,5 | 192 | 224 | 416 | 448 | 160 | 192 | 160 / 140 | 3,25 |
| **649 040 60** | **649 440 60** | 600 | 623,5 | 256 | 288 | 480 | 512 | 192 | 256 | 150 / 120 | 3,55 |
| **649 040 70** | **649 440 70** | 700 | 723,5 | 288 | 320 | 576 | 608 | 256 | 288 | 130 / 110 | 4,16 |
| **649 040 80** | **649 440 80** | 790 | 803,5 | 352 | 384 | 672 | 704 | 320 | 352 | 100 / 100 | 4,72 |
| **649 040 90** | **-** | 900 | 923,5 | 448 | 480 | 768 | 800 | 384 | 416 | 90 / 80 | 5,33 |
| **649 040 99** | **-** | 1000 | 1023,5 | 480 | 512 | 864 | 896 | 448 | 480 | 80 / 70 | 5,87 |
| **649 040 11** | **-** | 1100 | 1123,5 | 544 | 576 | 992 | 1024 | 480 | 512 | 70 / 60 | 6,39 |

[1] At 10,000 / 80,000 cycles.

### Note

Recommended fastening: M5/M6 screw.
Use all mounting positions to achieve the max. load rating.

Attention: Vertical mounting only.

## Slides DZ 9301, Width 19.1 mm, to 227 kg, Full Extension

**Material:**
Slide elements: Cold-rolled steel, zinc plated.
Ball retainers: Plastic.
Balls: Hardened steel.

Telescopic ball bearing slides for applications in the industrial and electronics sector.
- Lengths to 1.5 m.
- Optional bracket kits for various mounting options (page 808).
- Service life 10,000 cycles (to 180 kg up to 75,000 cycles).

**Ordering details: e.g.: Prod. No. 649 050 10, Slides DZ 9301**

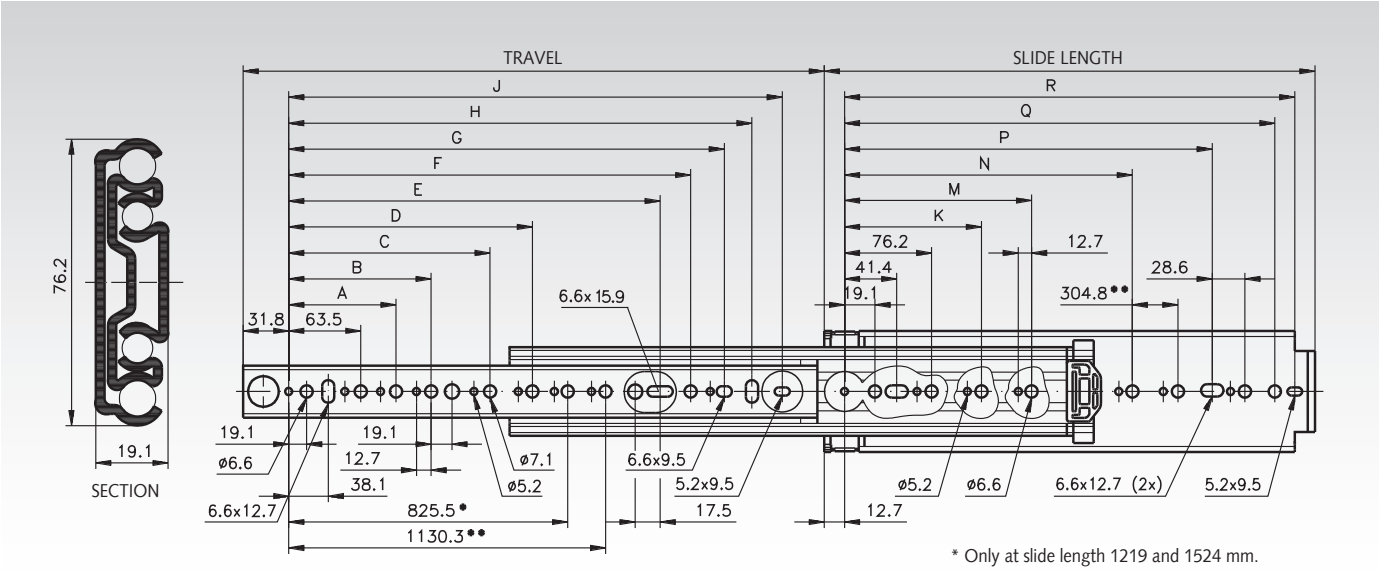


* Only at slide length 1219 and 1524 mm.
** Only at slide length 1524 mm.

| Product No. per Pair | Slide Length mm | Travel +/-3.3 mm | A mm | B mm | C mm | D mm | E mm | F mm | G mm | H mm | J mm | K mm | M mm | N mm | P mm | Q mm | R mm | Load Rating Pair kg | Weight Pair kg |
|---|---|---|---|---|---|---|---|---|---|---|---|---|---|---|---|---|---|---|---|
| 649 050 10 | 254 | 254 | - | - | - | - | - | 103,1 | 128,5 | 147,6 | 166,6 | - | - | - | 152,4 | 209,6 | 228,6 | 227 | 1,15 |
| 649 050 12 | 305 | 305 | - | - | - | - | - | 153,9 | 179,3 | 198,4 | 217,4 | - | - | - | 203,2 | 260,4 | 279,4 | 227 | 2,80 |
| 649 050 14 | 356 | 356 | - | - | - | - | - | 204,7 | 230,1 | 249,2 | 268,2 | - | - | - | 254,0 | 311,2 | 330,2 | 227 | 3,28 |
| 649 050 16 | 406 | 406 | 127 | - | - | - | - | 255,5 | 280,9 | 300,0 | 319,0 | - | - | - | 304,8 | 362,0 | 381,0 | 227 | 3,80 |
| 649 050 18 | 457 | 457 | 127 | - | - | - | 246,1 | 306,3 | 331,7 | 350,8 | 369,8 | - | - | - | 355,6 | 412,8 | 431,8 | 227 | 4,30 |
| 649 050 20 | 508 | 508 | 127 | 190,5 | - | - | 296,9 | 357,1 | 382,5 | 401,6 | 420,6 | - | - | - | 406,4 | 463,6 | 482,6 | 227 | 4,76 |
| 649 050 22 | 559 | 559 | 127 | 190,5 | - | - | 347,7 | 407,9 | 433,3 | 452,4 | 471,4 | - | - | - | 457,2 | 514,4 | 533,4 | 227 | 5,22 |
| 649 050 24 | 610 | 610 | 127 | 190,5 | - | - | 398,5 | 458,7 | 484,1 | 503,2 | 522,2 | - | - | - | 508,0 | 565,2 | 584,2 | 227 | 5,76 |
| 649 050 26 | 660 | 660 | 127 | 190,5 | - | - | 449,3 | 509,5 | 534,9 | 554,0 | 573,0 | - | - | - | 558,8 | 616,0 | 635,0 | 227 | 6,26 |
| 649 050 28 | 711 | 711 | 127 | 190,5 | - | - | 500,1 | 560,3 | 585,7 | 604,8 | 623,8 | - | - | - | 609,6 | 666,8 | 685,8 | 227 | 6,74 |
| 649 050 30 | 762 | 762 | 127 | 190,5 | 368,3 | - | 550,9 | 611,1 | 636,5 | 655,6 | 674,6 | 235 | - | 501,7 | 660,4 | 717,6 | 736,6 | 222 | 7,24 |
| 649 050 32 | 813 | 813 | 127 | 190,5 | 368,3 | - | 601,7 | 661,9 | 687,3 | 706,4 | 725,4 | 235 | 393,7 | 552,5 | 711,2 | 768,4 | 787,4 | 218 | 7,72 |
| 649 050 34 | 864 | 864 | 127 | 190,5 | 368,3 | 469,9 | 652,5 | 712,7 | 738,1 | 757,2 | 776,2 | 235 | 419,1 | 603,3 | 762,0 | 819,2 | 838,2 | 213 | 8,30 |
| 649 050 36 | 914 | 914 | 127 | 190,5 | 368,3 | 520,7 | 703,3 | 763,5 | 788,9 | 808,0 | 827,0 | 235 | 444,5 | 654,1 | 812,8 | 870,0 | 889,0 | 209 | 8,74 |
| 649 050 40 | 1016 | 1016 | 127 | 190,5 | 368,3 | 520,7 | 804,9 | 865,1 | 890,5 | 909,6 | 928,6 | 235 | 546,1 | 755,7 | 914,4 | 971,6 | 990,6 | 200 | 9,76 |
| 649 050 42 | 1067 | 1067 | 127 | 190,5 | 368,3 | 520,7 | 855,7 | 915,9 | 941,3 | 960,4 | 979,4 | 235 | 546,1 | 806,5 | 965,2 | 1022,4 | 1041,4 | 195 | 10,22 |
| 649 050 44 | 1118 | 1118 | 127 | 190,5 | 368,3 | 520,7 | 906,5 | 966,7 | 992,1 | 1011,2 | 1030,2 | 235 | 546,1 | 857,3 | 1016,0 | 1073,2 | 1092,2 | 182 | 10,70 |
| 649 050 48 | 1219 | 1219 | 127 | 190,5 | 368,3 | 520,7 | 1008,1 | 1068,3 | 1093,7 | 1112,8 | 1131,8 | 235 | 596,9 | 958,9 | 1117,8 | 1174,8 | 1193,8 | 182 | 11,72 |
| 649 050 60 | 1524 | 1524 | 127 | 190,5 | 368,3 | 520,7 | 1312,9 | 1373,1 | 1398,5 | 1417,6 | 1436,6 | 235 | 596,9 | 958,9 | 1422,4 | 1479,6 | 1498,6 | 154 | 14,64 |

### Note

Recommended mount: M5/M6 screw.
Max. screw head of 4.8 mm height and 12.7 mm Ø.
Use all mounting positions to achieve the max. load rating.

Bracket accessory kits DZ 634 for side and bottom mounting
see page 808.

## Slides DZ 9308, Width 19.1 mm, to 227 kg, Full Extension

**Material:**
Slide elements: Cold-rolled steel, bright zinc plated.
Ball retainers: Plastic.
Balls: Hardened steel.

Telescopic ball bearing slides for applications in the industrial and electronics sector.
- Slides sold separately (left or right).
- Lock-in in open position.
- Lock-out in closed position.
- Front lever lock release.
- Only for vertical mounting.
- Optional bracket accessory kits for various mounting options (page 808).
- Service life 10,000 cycles (to 180 kg up to 75,000 cycles).

**Note: Sold singly.**
**Picture: Left slide.**

**Ordering details: e.g.: Prod. No. 649 052 12, Slide DZ 9308, left**
**Prod. No. 649 054 12, Slide DZ 9308, right**

**Drawing: Left Slide**

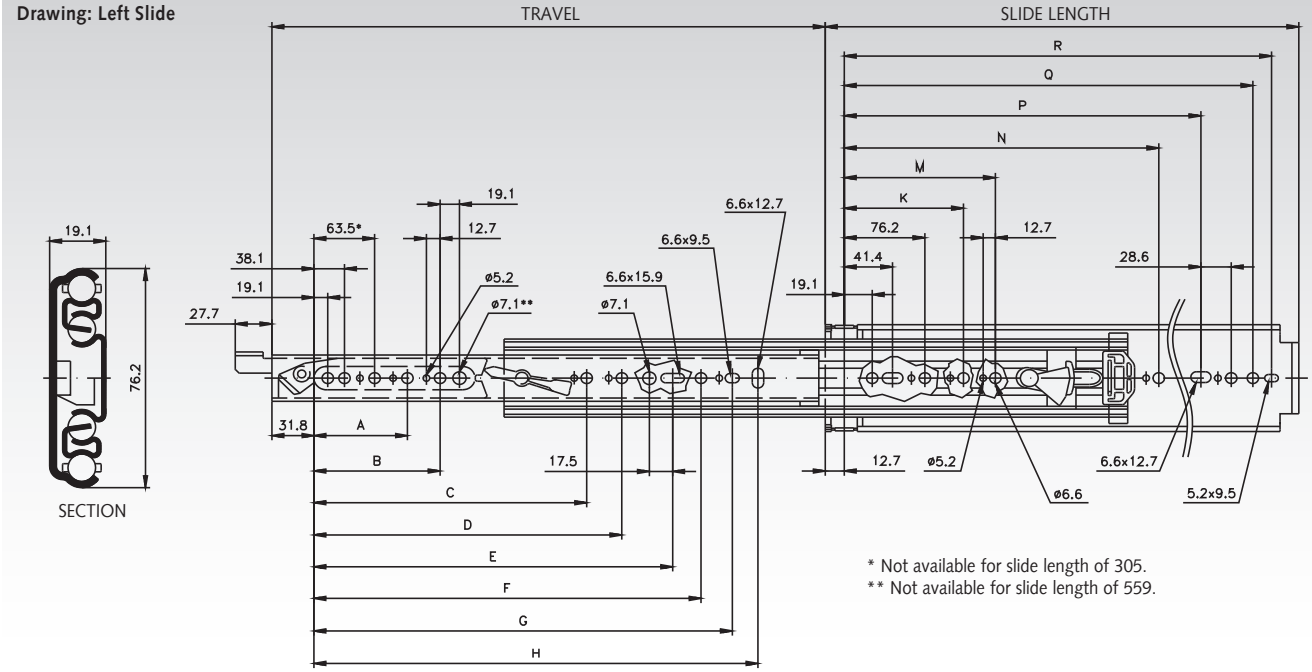


* Not available for slide length of 305.
** Not available for slide length of 559.

| Product No. per Piece left | Product No. per Piece right | Slide Length mm | Travel +/-3.3 mm | A mm | B mm | C mm | D mm | E mm | F mm | G mm | H mm | K mm | M mm | N mm | P mm | Q mm | R mm | Load Rating per Pair kg | Weight Piece kg |
|---|---|---|---|---|---|---|---|---|---|---|---|---|---|---|---|---|---|---|---|
| 649 052 12 | 649 054 12 | 305 | 305 | - | - | - | - | - | 153,9 | 179,3 | 198,4 | - | - | - | 203,2 | 260,4 | 279,4 | 227 | 1,46 |
| 649 052 14 | 649 054 14 | 356 | 356 | - | - | - | - | - | 204,7 | 230,1 | 249,2 | - | - | - | 254,0 | 311,2 | 330,2 | 227 | 1,71 |
| 649 052 16 | 649 054 16 | 406 | 406 | - | - | - | - | - | 255,5 | 280,9 | 300,0 | - | - | - | 304,8 | 362,0 | 381,0 | 227 | 1,97 |
| 649 052 18 | 649 054 18 | 457 | 457 | 127 | - | - | - | - | 306,3 | 331,7 | 350,8 | - | - | - | 355,6 | 412,8 | 431,8 | 227 | 2,21 |
| 649 052 20 | 649 054 20 | 508 | 508 | 127 | - | - | - | 296,9 | 357,1 | 382,5 | 401,6 | - | - | - | 406,4 | 463,6 | 482,6 | 227 | 2,45 |
| 649 052 22 | 649 054 22 | 559 | 559 | 127 | 190,5 | - | - | 347,7 | 407,9 | 433,3 | 452,4 | - | - | - | 457,2 | 514,4 | 533,4 | 227 | 2,69 |
| 649 052 24 | 649 054 24 | 610 | 610 | 127 | 190,5 | - | - | 398,5 | 458,7 | 484,1 | 503,2 | - | - | - | 508,0 | 565,2 | 584,2 | 227 | 2,96 |
| 649 052 26 | 649 054 26 | 660 | 660 | 127 | 190,5 | - | - | 449,3 | 509,5 | 534,9 | 554,0 | - | - | - | 558,8 | 616,0 | 635,0 | 227 | 3,20 |
| 649 052 28 | 649 054 28 | 711 | 711 | 127 | 190,5 | - | - | 500,1 | 560,3 | 585,7 | 604,8 | - | - | - | 609,6 | 666,8 | 685,8 | 227 | 3,46 |
| 649 052 30 | 649 054 30 | 762 | 762 | 127 | 190,5 | - | - | 550,9 | 611,1 | 636,5 | 655,6 | 235 | - | 501,7 | 660,4 | 717,6 | 736,6 | 222 | 3,71 |
| 649 052 32 | 649 054 32 | 813 | 813 | 127 | 190,5 | - | - | 601,7 | 661,9 | 687,3 | 706,4 | 235 | - | 552,5 | 711,2 | 768,4 | 787,4 | 218 | 3,98 |
| 649 052 34 | 649 054 34 | 864 | 864 | 127 | 190,5 | - | 520,7 | 652,5 | 712,7 | 738,1 | 757,1 | 235 | - | - | 762,0 | 819,1 | 832,2 | 213 | 4,22 |
| 649 052 36 | 649 054 36 | 914 | 914 | 127 | 190,5 | 368,3 | 520,7 | 703,3 | 763,5 | 788,9 | 807,9 | 235 | - | - | 812,8 | 869,9 | 889,0 | 209 | 4,49 |
| 649 052 40 | 649 054 40 | 1016 | 1016 | 127 | 190,5 | 368,3 | - | 804,9 | 865,1 | 890,5 | 909,5 | 235 | - | 755,7 | 914,4 | 971,5 | 990,6 | 200 | 5,03 |
| 649 052 42 | 649 054 42 | 1067 | 1067 | 127 | 190,5 | 368,3 | - | 855,7 | 915,7 | 941,3 | 960,4 | 235 | - | 806,5 | 965,2 | 1022,4 | 1041,4 | 195 | 5,27 |
| 649 052 48 | 649 054 48 | 1219 | 1219 | 127 | 190,5 | 368,3 | 520,7 | 1008,1 | 1068,3 | 1093,7 | 1112,8 | 235 | - | 958,9 | 1117,6 | 1174,8 | 1193,8 | 182 | 6,00 |
| 649 052 60 | 649 054 60 | 1524 | 1524 | 127 | 190,5 | 368,3 | 520,7 | 1312,9 | 1373,1 | 1398,5 | 1417,8 | 235 | 596,9 | 958,9 | 1422,4 | 1479,5 | 1498,6 | 154 | 7,54 |

## Note

These slides are sold separately. To lock both sides a left-hand and a right-hand slide are required. To lock one side a left or right-hand slide can be combined with slide DZ 9301 as non-locking companion slide, see page 804.

Attention: Vertical mounting only.

Recommended mount: M5/M6 screw.
Max. screw head of 4.8 mm height and 12.7 mm Ø.
Use all mounting positions to achieve the max. load rating.

Bracket accessory kits DZ 634 for side and bottom mounting see page 808.

## Slides DA 4160, Width 26.5 mm, to 300 kg, Full Extension

**Material:**
Slide elements: Aluminium, corrosion resistant.
Ball retainers and Balls: Stainless Steel.

Heavy Duty Telescopic ball bearing slides for applications in the industrial and electronics sector.
- Very high load capacity up to 300 kg.
- Good corrosion resistance.
- Only for vertical mounting.
- Service life 10,000 cycles.

**Ordering details: e.g.: Prod. No. 649 055 30, Slides DA 4160**

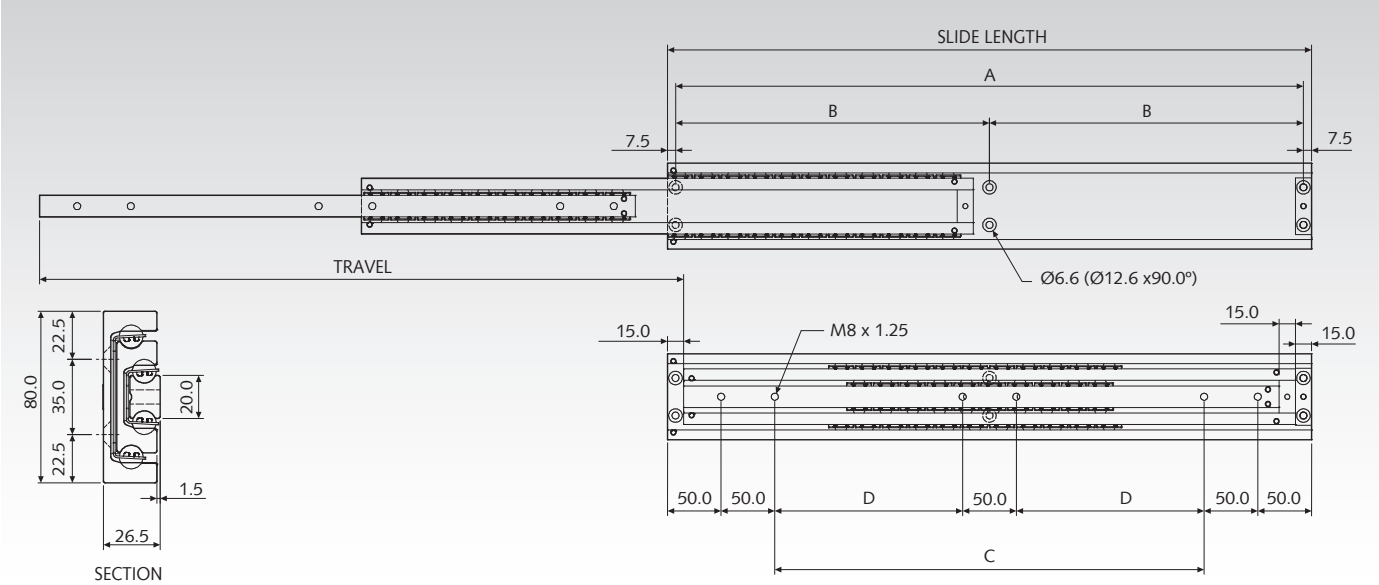


| Produ per Pair | Slide Length mm | Travel +/-3,2 mm | A mm | B mm | C mm | D mm | Load Rating per Pair kg | Weight kg |
|---|---|---|---|---|---|---|---|---|
| **649 055 30** | 300 | 300 | 285 | - | 100 | - | 240 | 2,50 |
| **649 055 35** | 350 | 350 | 335 | - | 150 | - | 255 | 2,93 |
| **649 055 40** | 400 | 400 | 385 | - | 200 | - | 270 | 3,37 |
| **649 055 45** | 450 | 450 | 435 | - | 250 | - | 285 | 3,80 |
| **649 055 50** | 500 | 500 | 485 | - | 300 | - | 300 | 4,24 |
| **649 055 55** | 550 | 550 | - | 267,5 | - | 150 | 300 | 4,68 |
| **649 055 60** | 600 | 600 | - | 292,5 | - | 175 | 300 | 5,12 |
| **649 055 65** | 650 | 650 | - | 317,5 | - | 200 | 295 | 5,56 |
| **649 055 70** | 700 | 700 | - | 342,5 | - | 225 | 290 | 6,00 |
| **649 055 80** | 800 | 800 | - | 392,5 | - | 275 | 270 | 6,87 |
| **649 055 90** | 900 | 900 | - | 442,5 | - | 325 | 250 | 7,75 |
| **649 056 00** | 1000 | 1000 | - | 492,5 | - | 375 | 230 | 8,62 |

## Note

Recommended mounts: M6/M8 screw.
Use all mounting positions to achieve the max. load rating.

Attention: Vertical mounting only.

The load rating is based on slides mounted 600mm apart. These slides are also suitable for wider applications, if the drawer is stiff enough.

End stops have been tested to 10 cycles with the nominated loads at 0.8 m/s. We recommend that additional external stopping arrangements are used.

We recommend that quality grease, rated for extreme pressure, is re-applied at 2000 cycle intervals.

## Slides DZ 0522, Width 26.5 mm, to 180 kg, Over Extension

**Material:**
Slide elements: Cold-rolled steel, bright zinc plated.
Ball retainers: Cold-rolled steel, zinc-plated.
Balls: Hardened steel.

Telescopic ball bearing slides for applications in the industrial and electronics sector.
- Heavy-duty construction.
- Shock blocks offering protection against shock and vibration.
- Protective shroud prevents excessive contamination of the ball tracks.
- Mounting plates on inner and outer members.
- Service life 10,000 cycles (to 140 kg up to 40,000 cycles).

**Ordering details: e.g.: Prod. No. 649 058 59, Slides DZ 0522**

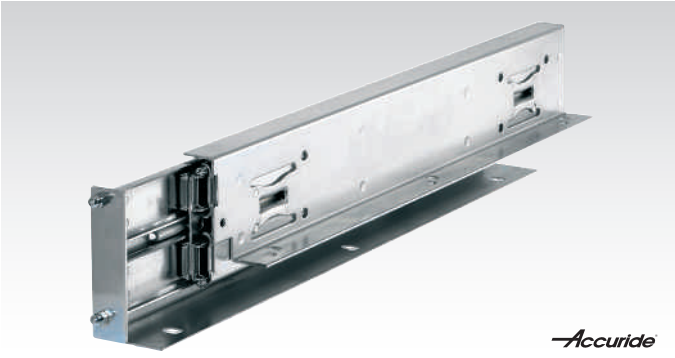


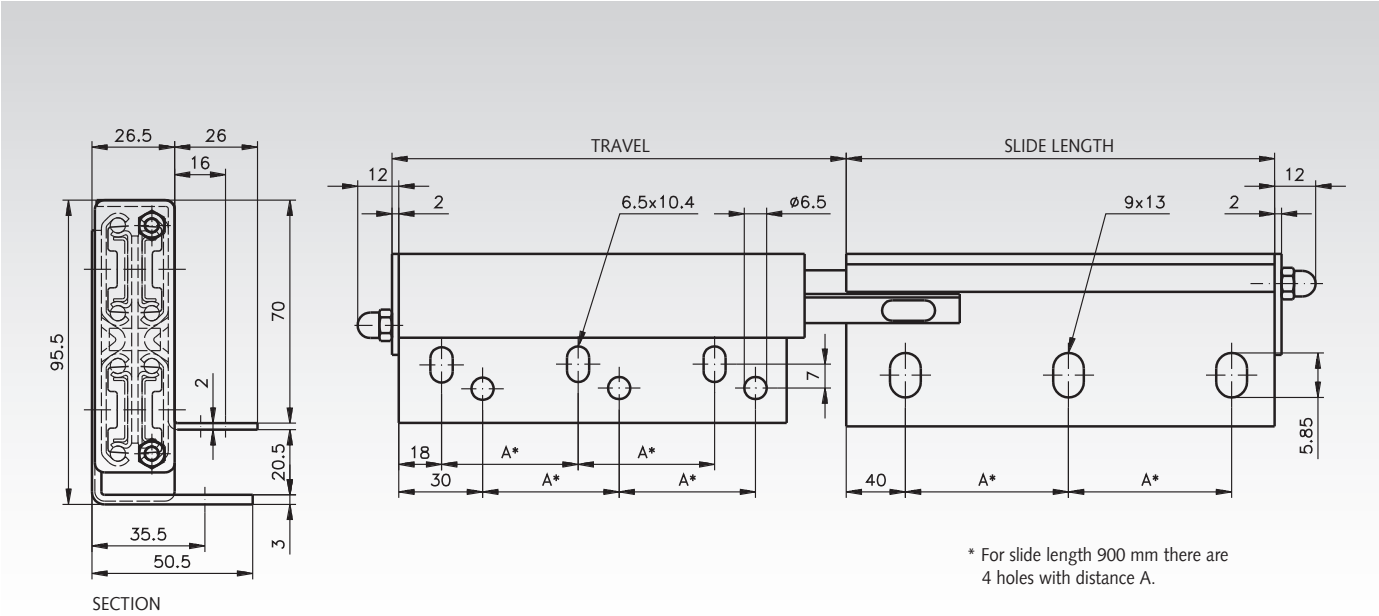


| Product No. per Pair | Slide Length mm | Travel +/-3.2 mm | A mm | Overall Length mm | Load Rating per Pair kg | Weight per Pair kg |
|---|---|---|---|---|---|---|
| **649 058 59** | 457 | 534 | 194,0 | 481 | 180 | 9,74 |
| **649 058 61** | 600 | 625 | 265,0 | 624 | 180 | 12,68 |
| **649 058 62** | 900 | 907 | 276,5 | 924 | 150 | 19,24 |

### Note

Recommended mount: M6 screws on the inner, extending member, M8 screws on the outer fixed member.
Use all mounting positions to achieve the max. load rating.
The cabinet and drawer must be designed to minimise any deflection and torsion of the slide.

Overall length = slide length + 24 mm.

**Selection Tool**
on the Internet at **www.maedler.de**
in the section **MÄDLER®-Tools**

## Pairs of Clip-On Brackets DZ 633 for Slides 2109, 2132, 3732 and 3832

**Material:**
Steel, bright zinc plated.
**Can be used for:**
Type DZ 2109 (page 773).
Type DZ 2132 (page 777).
Type DZ 3732 (page 783).
Type DZ 3832 (page 784).
Type DZ 3832 DO (page 788).
Type DZ 3832 SC (page 787).

Per pair of slides, one pair of clip-on brackets is required.
Recommended mounts: M4 screw.

**Ordering details: e.g.: Prod. No. 649 020 35, 1 Pair of Clip-On Brackets DZ 633, Zinc Plated, 346.7 mm long**

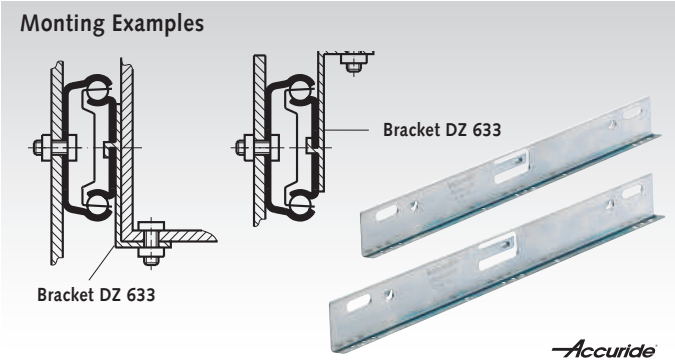


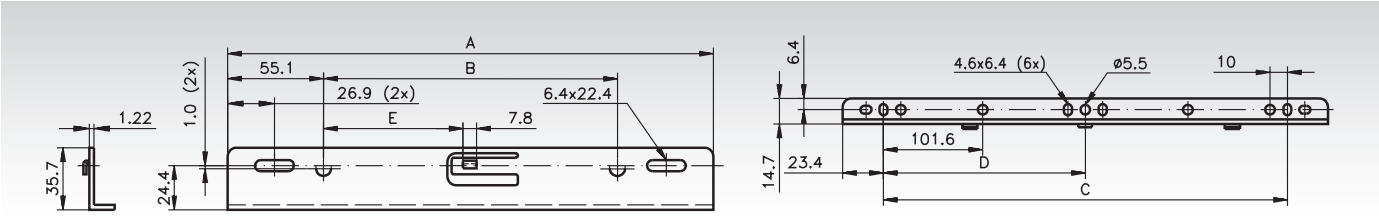


| Product No. Pair of Brackets DZ-zinc bright | can be used for Type 2109/2132 with slide length | can be used for Types 3732/3832 with slide length | A mm | B mm | C mm | D mm | E mm | Weight per Pair kg |
|---|---|---|---|---|---|---|---|---|
| **649 020 35** | - | 350 | 346,7 | 236,5 | 300 | 150 | 114,4 | 0,34 |
| **649 020 40** | 400 | 400 | 396,7 | 286,6 | 350 | 175 | 139,4 | 0,38 |
| **649 020 45** | 450/600/650/700 | 450 | 446,8 | 336,6 | 400 | 200 | 164,4 | 0,42 |
| **649 020 50** | 500 | 500 | 496,8 | 386,6 | 450 | 225 | 189,4 | 0,48 |
| **649 020 55** | 550 | 550/600/650/700 | 546,8 | 436,6 | 500 | 250 | 214,4 | 0,52 |

## Bracket Accessory Kits DZ 634 for Slides 9301 and 9308

**Material:** Steel, bright zinc plated.

**Each kit comprises:** 2 brackets and 4 hexagon screws 6.35 mm with washers and nuts.
Bracket accessory kits for side or bottom mounting (examples and amount of bracket accessory kits required see selection table page 809).
**Can be used for:** Type DZ 9301 (page 804) and
Type DZ 9308 (page 805).

**Ordering details: e.g.: Prod. No. 649 056 12, Bracket Kit DZ 634, 305 mm long**

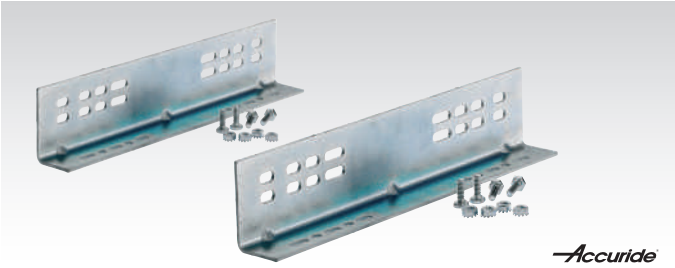


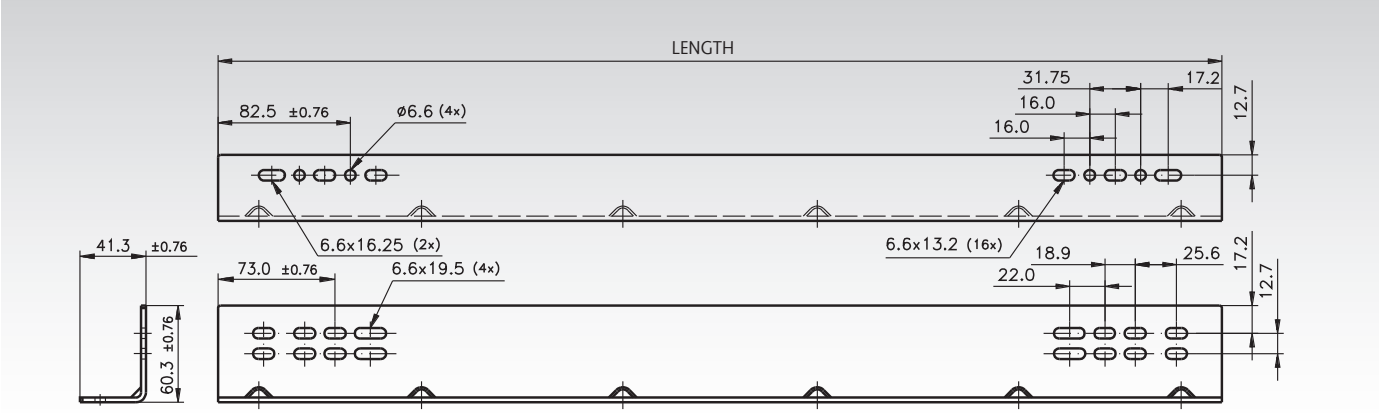


| Product No. Kit* | Length mm | Width mm | Height mm | Weight kg | Product No. Kit* | Length mm | Width mm | Height mm | Weight kg |
|---|---|---|---|---|---|---|---|---|---|
| **649 056 12** | 305 | 41,3 | 60,3 | 1,3 | **649 056 22** | 559 | 41,3 | 60,3 | 2,4 |
| **649 056 16** | 406 | 41,3 | 60,3 | 1,7 | **649 056 28** | 711 | 41,3 | 60,3 | 3,1 |

* Amount of kits required for each pair of slides see selection table page 809.

## Bracket Accessory Kits DZ 634: Mounting Examples and Selection Table

For bracket accessory kits DZ 634 (page 808) with slides DZ 9301 (page 804) or DZ 9308 (page 805).

### Examples Side Mounting

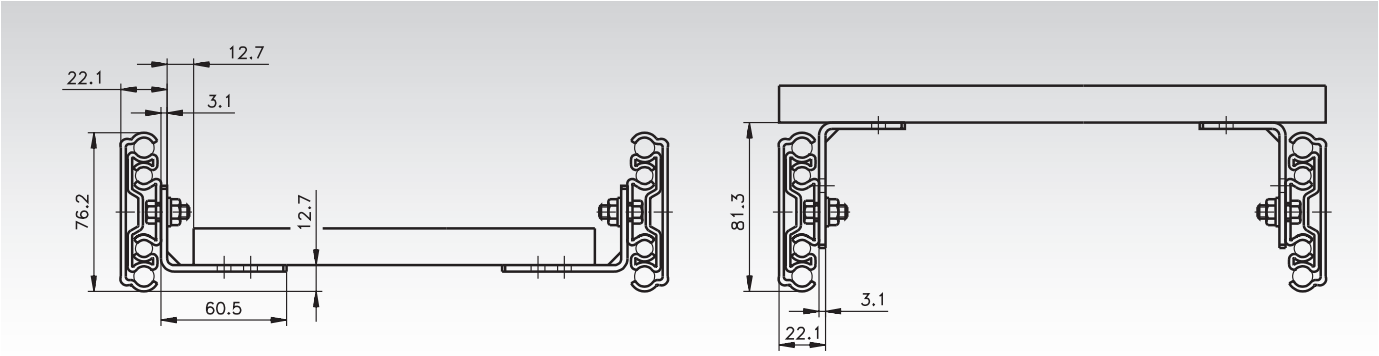


### Examples Bottom Mounting

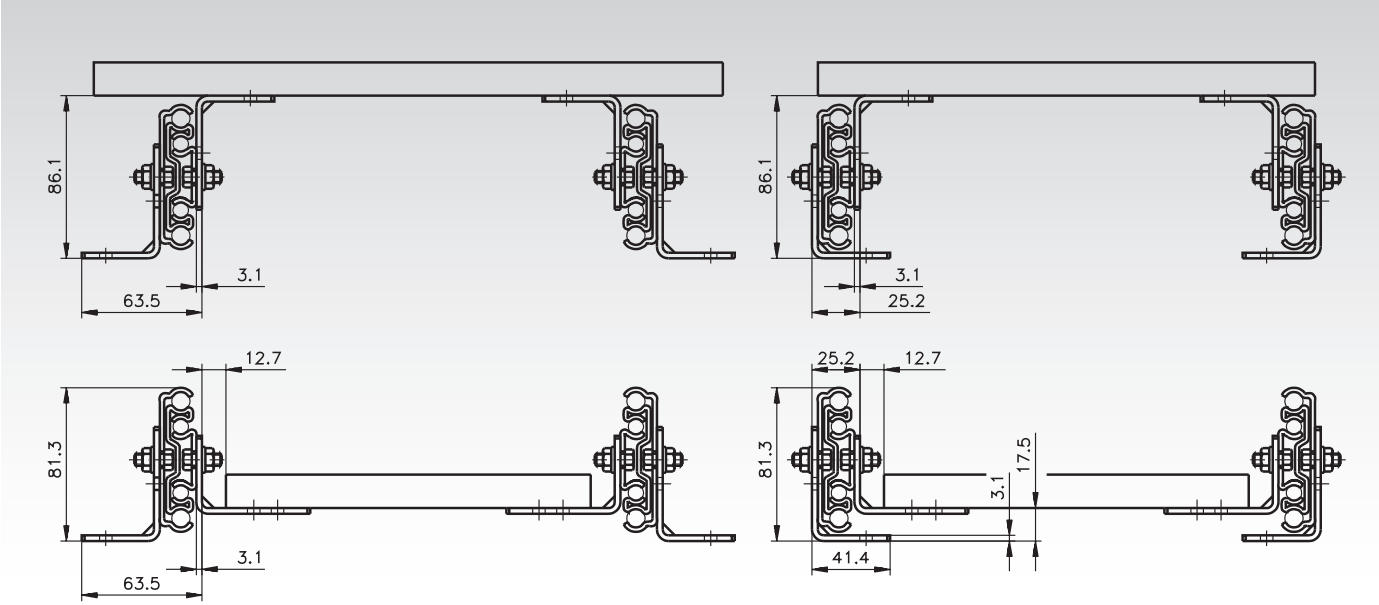


### Selection Table

| Pair of Slides DZ 9301 | Pair of Slides DZ 9308 left / right | Slide Length mm | Side Mounting Required Bracket Kits, Amount and Product No. | Bottom Mounting Required Bracket Kits, Amount and Product No. |
|---|---|---|---|---|
| 649 050 12 | 649 052 12 / 649 054 12 | 304,8 | 1 x 649 056 12 | 2 x 649 056 12 |
| 649 050 14 | 649 052 14 / 649 054 14 | 355,6 | 1 x 649 056 12 | 2 x 649 056 12 |
| 649 050 16 | 649 052 16 / 649 054 16 | 406,4 | 1 x 649 056 16 | 2 x 649 056 16 |
| 649 050 18 | 649 052 18 / 649 054 18 | 457,2 | 1 x 649 056 16 | 2 x 649 056 16 |
| 649 050 20 | 649 052 20 / 649 054 20 | 508,0 | 1 x 649 056 16 | 2 x 649 056 16 |
| 649 050 22 | 649 052 22 / 649 054 22 | 558,8 | 1 x 649 056 22 | 2 x 649 056 22 |
| 649 050 24 | 649 052 24 / 649 054 24 | 609,6 | 1 x 649 056 22 | 2 x 649 056 22 |
| 649 050 26 | 649 052 26 / 649 054 26 | 660,4 | 1 x 649 056 22 | 2 x 649 056 22 |
| 649 050 28 | 649 052 28 / 649 054 28 | 711,2 | 1 x 649 056 28 | 2 x 649 056 28 |
| 649 050 30 | 649 052 30 / 649 054 30 | 762,0 | 1 x 649 056 28 | 2 x 649 056 28 |
| 649 050 32 | 649 052 32 / 649 054 32 | 812,8 | 1 x 649 056 28 | 2 x 649 056 28 |
| 649 050 34 | 649 052 34 / 649 054 34 | 863,6 | 2 x 649 056 12 | 4 x 649 056 12 |
| 649 050 36 | 649 052 36 / 649 054 36 | 914,4 | 2 x 649 056 12 | 4 x 649 056 12 |
| 649 050 40 | 649 052 40 / 649 054 40 | 1016,0 | 1 x 649 056 12 & 1 x 649 056 22 | 2 x 649 056 12 & 2 x 649 056 22 |
| 649 050 42 | 649 052 42 / 649 054 42 | 1066,8 | 1 x 649 056 12 & 1 x 649 056 22 | 2 x 649 056 12 & 2 x 649 056 22 |
| 649 050 48 | 649 052 48 / 649 054 48 | 1219,2 | 1 x 649 056 12 & 1 x 649 056 28 | 2 x 649 056 12 & 2 x 649 056 28 |
| 649 050 60 | 649 052 60 / 649 054 60 | 1524,0 | 1 x 649 056 22 & 1 x 649 056 28 | 2 x 649 056 22 & 2 x 649 056 28 |

## Linear Motion Guide DA 0115 RC with Ball Carriage

**Material:** Track made from aluminium.
Carriage: Stainless steel housing with plastic sealings.
On choice: With stainless steel balls (greased) or polymer balls (grease free).

Linear guide for universal use.

- Four track lenghts on choice (for to cut by the customer).
- Without boreholes, or with mounting holes.
- Several carriages can be used on one track.
- Resistant against corrosion and dirt.
- All parts have to be ordered seperately.
- Long service life, tested to 80,000 meters of travel distance.

**Ordering details: e.g.: 1x Prod. No. 649 705 01, Carriage,**
**1x Prod. No. 649 705 06H, Track 600mm with Mounting Holes,**
**2x Prod. No. 649 705 03, End Stop**

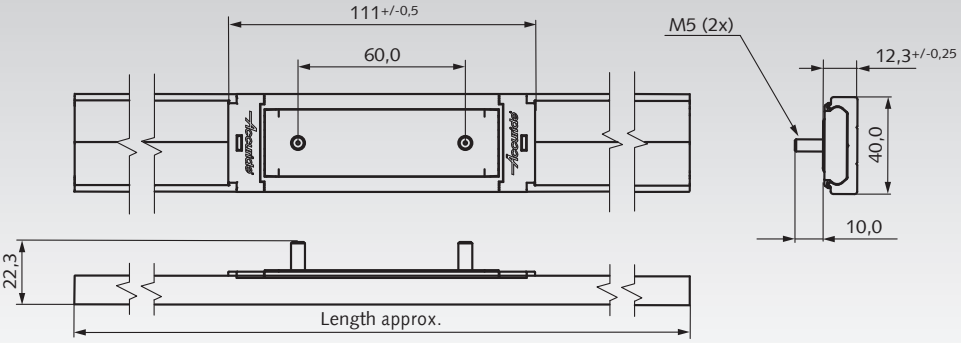


Mounting holes only at
Product No. 649 705 06H,
No. 649 705 12H,
No. 649 705 18H,
and No. 649 705 24H

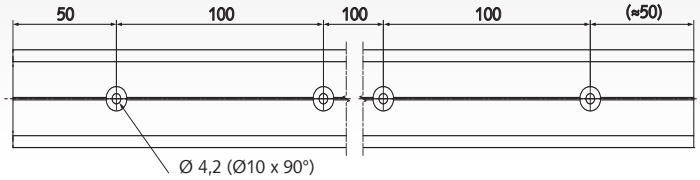


| Product No. | Product | Load ratings in kg depending on mounting position and number of carriages | | | | | | | | | Weight |
|---|---|---|---|---|---|---|---|---|---|---|---|
| | | vertically mounted | | | horizontally monted, lying | | | horizontally monted, hanging | | | |
| | | 1 Carriage | 2 Carri. | 3 Carri. | 1 Carriage | 2 Carri. | 3 Carri. | 1 Carriage | 2 Carri. | 3 Carri. | g |
| **649 705 01** | Carriage with stainless steel balls | 50 | 90 | 130 | 30 | 55 | 70 | 40 | 70 | 90 | 120 |
| **649 705 02** | Carriage with polymer balls | 30 | 54 | 75 | 18 | 32 | 42 | 24 | 42 | 54 | 85 |
| **649 705 06** | Track, length 600mm | | | | | | | | | | 320 |
| **649 705 06H** | Track, length 600mm with holes | | | | | | | | | | 320 |
| **649 705 12** | Track, length 1200mm | | | | | | | | | | 635 |
| **649 705 12H** | Track, length 1200mm with holes | | | | | | | | | | 635 |
| **649 705 18** | Track, length 1800mm | | | | | | | | | | 950 |
| **649 705 18H** | Track, length 1800mm with holes | | | | | | | | | | 950 |
| **649 705 24** | Track, length 2400mm | | | | | | | | | | 1270 |
| **649 705 24H** | Track, length 2400mm with holes | | | | | | | | | | 1270 |
| **649 705 03*** | End Stop (1 piece)* | | | | | | | | | | 15 |

* Depending on the application, 2 pieces may be required. 2 screws included.

Carriage (with mounting aid) and End Stops have to be ordered seperately.

Tracks on choice without bores or with mounting holes.

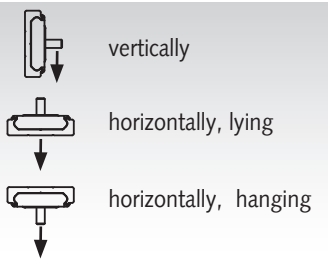


The load ratings depend on the mounting position (see table).

**On request:**

Drilling jig: to drill pinholes for permanent pinned connection of tracks.

### Note

Not recommended for high torque applicatins.
Fix track on a rigid and levelm surface. Fixing recommendation: M4 countersunk screw or 4mm countersunk wood screw.
Drill countersunk holes in the middle of track, hole distance from 100mm up to 200mm, depending on mounting position and load.

Push the carriages with the mounting aid carefully onto the track. Distribute weight evenly across carriages. Infinte track lengths possible. Butt tracks end to end and align the centre lines. For permanent pinned connection, use drilling jig (on request) for 3mm pins

## LOCTITE® 222 - Low-Strength Thread Locking

**Ordering details: e.g.: Product No. 140 731 01, Loctite 222, Cont. 10 ml**

| Product No. | Contents in ml | Packaging Type | Weight in g |
|---|---|---|---|
| **140 731 01** | 10 | Bottle | 20 |
| **140 731 02** | 50 | Bottle | 77 |

**Specifications**
- Thread size: to M36.
- Strength: Low.
- Functional strength (Typical value at +22°C): 6 hrs.
- Breakaway torque tested according to DIN 54454: 6 Nm.
- Long-term temperature resistance: +150°C.

**Approvals**
- P1 NSF Reg. No.: 123002.

Low-strength thread locking for all threaded connections made from metal to M36.
The connections can be unfastened using normal tools.

**Applications**
Ideal for adjusting screws, screws at maintenance access, carburetor screws etc.. Also suitable for metals which might brake during disassembly.

## LOCTITE® 243 - Medium Strength Thread Locking

**Ordering details: e.g.: Product No. 140 731 07, Loctite 243, Cont. 10 ml**

| Product No. | Contents in ml | Packaging Type | Weight in g |
|---|---|---|---|
| **140 731 07** | 10 | Bottle | 20 |
| **140 731 08** | 50 | Bottle | 78 |

**Specifications**
- Thread size: to M36.
- Strength: Medium.
- Functional strength (Typical value at +22°C): 2 hrs.
- Breakaway torque tested according to DIN 54454: 20 Nm.
- Long-term temperature resistance: +150°C.

**Approvals**
- P1 NSF Reg. No.: 123000.
- Certified to ANSI/NSF.
- Standard 61.

Medium strength thread locking for all threaded connections made from metal to M36.
Tolerates low oil-based contaminations.
The connections can be unfastened using normal tools.

**Applications**
Locks and prevents loosening from vibration on parts such as screws, nuts and studs, e.g., on motors, gearboxes and housings.

## LOCTITE® 290 - Post-Assembly Thread Locking, Medium Strength

**Ordering details: e.g.: Product No. 140 731 12, Loctite 290, Cont. 10 ml**

| Product No. | Contents in ml | Packaging Type | Weight in g |
|---|---|---|---|
| **140 731 12** | 10 | Bottle | 20 |
| **140 731 13** | 50 | Bottle | 77 |

**Specifications**
- Thread size: to M12.
- Strength: Medium.
- Functional strength (Typical value at +22°C): 3 hrs.
- Breakaway torque tested according to DIN 54454: 10 Nm.
- Long-term temperature resistance: +150°C.

For post-assembly thread locking (medium strength). For metal threads. Because of its low viscosity, the product penetrates into the threads, to size M12. When disassembling the parts, the connection should be heated to +250°C.

**Applications**
Prefabricated connections, carburetor screws, adjusting screws, screws at maintenance access etc.

## LOCTITE® 2701 - Maximum Strength Thread Locking

**Ordering details: e.g.: Product No. 140 731 18, Loctite 2701, Cont. 10 ml**

| Product No. | Contents in ml | Packaging Type | Weight |
|---|---|---|---|
| **140 731 18** | 10 | Bottle | 20 |
| **140 731 19** | 50 | Bottle | 78 |

**Specifications**
- Thread size: To M20.
- Strength: High.
- Functional strength (Typical value at 22°C): 6 hrs.
- Breakaway torque tested according to DIN 54454: 38 Nm.
- Long-term temperature resistance: +150°C.

**Approvals**
- P1 NSF Reg. No.: 123006.

Maximum strength thread locking for all threaded connections made from metal, including passive materials, such as high-alloyed steel. Ideal for threaded connections exposed to strong vibrations and shocks, e.g. studs on motors or pumps etc. When disassembling the parts, the connection should be heated to +250°C.

**Applications**
All threaded connections which require high durability against strong vibrations and shocks or extreme environmental or chemical influences.

Safety Data Sheets at www.maedler.de in the section Downloads

## LOCTITE® 603 - Oil-Tolerant Bonding Product

**Ordering details: e.g.: Product No. 140 732 02, Loctite 603, Cont. 10 ml**

| Product No. | Contents in ml | Packaging Type | Weight in g |
|---|---|---|---|
| **140 732 02** | 10 | Bottle | 20 |
| **140 732 03** | 50 | Bottle | 83 |

**Specifications**
- Strength: High.
- Handling strength (at room temperature on steel): after 10 min.
- Functional strength (Typical value at +22°C): min. 12 hrs.
- Bondline gap: to 0.1 mm.
- Temperature resistance: +150°C.

**Approvals**
- P1 NSF Reg. No.: 123003.
- Tested and recommended by leading roller bearing manufacturers.

Oil-tolerant, universal bonding product for metal. Tolerates oil-based contaminations. Especially suited for the mounting of bearings (bondline gap to 0.1 mm). Rapid setting with high strength. When disassembling the parts, the connection should be heated to +250°C.

**Applications**
Bonding of bushes, bearings etc. in housings and on shafts with small bondline gap (to 0.1 mm).

## LOCTITE® 638 - Bonding Product for Large Gaps

**Ordering details: e.g.: Product No. 140 732 07, Loctite 638, Cont. 10 ml**

| Product No. | Contents in ml | Packaging Type | Weight in g |
|---|---|---|---|
| **140 732 07** | 10 | Bottle | 20 |
| **140 732 08** | 50 | Bottle | 83 |

**Specifications**
- Strength: High.
- Handling strength (at room temperature on steel): after 5 min.
- Functional strength (Typical value at +22°C): min. 6 hrs.
- Bondline gap: To 0.25 mm.
- Temperature resistance: +150°C.

**Approvals**
- KTW recommendation.
- DVGW approval.
- P1 NSF Reg. No.: 123010.

Special bonding product for metal highly capable of filling gaps and fast reached handling strength. For gaps up to 0.25 mm. Temperature resistant to + 150°C. Handling strength after only 5 minutes. When disassembling the parts, the connection should be heated to +250°C.

**Applications**
Bonding of bushes, bearings etc. in housings and on shafts with large bondline gap (to 0.25 mm).

## LOCTITE® 648 - Bonding Product with High Temperature Resistance

**Ordering details: e.g.: Product No. 140 732 13, Loctite 648, Cont. 10 ml**

| Product No. | Contents in ml | Packaging Type | Weight in g |
|---|---|---|---|
| **140 732 13** | 10 | Bottle | 20 |
| **140 732 14** | 50 | Bottle | 83 |

**Specifications**
- Strength: High.
- Handling strength (at room temperature on steel): after 5 min.
- Functional strength (Typical value at 22°C): min. 6 hrs.
- Bondline gap: To 0.15 mm.
- Temperature resistance: +175°C.

Universal bonding product for metal, temperature resistant to +175°C. Capable of filling gaps up to 0.15 mm. Handling strength after only 5 minutes. When disassembling the parts, the connection should be heated to 250°C.

**Applications**
Bonding of bushes, bearings etc. in housings and on shafts, in applications where high operating temperatures prevail.

*Safety Data Sheets at www.maedler.de in the section Downloads*

## LOCTITE® 401 - Universal Instant Adhesive

**Ordering details: e.g.: Product No. 140 733 04, Loctite 401, Contents 5 g**

| Product No. | Contents in g | Packaging Type | Weight in g |
|---|---|---|---|
| **140 733 04** | 5 | Bottle | 14 |
| **140 733 05** | 20 | Bottle | 31 |

**Specifications**
- Temperature range: to +80°C.
- Handling strength (steel at +22°C and 50% air humidity): after 5-20 sec.
- Viscosity mPa.s: 110.
- Especially suited for: porous materials.

**Approvals**
- P1 NSF Reg. No.: 123011.

Universal instant adhesive. Bonds almost all materials as, e.g., plastics, elastomers, metals, paper, cardboard, wood.

**Application examples**
Bonding a PVC seal onto an ABS housing when manufacturing car mirrors. Bonding foam rubber onto a steel or plastic housing. Bonding PVC foils onto paper when producing packaging materials. Bonding small plastic parts onto wood, e.g., in the furniture industry.

## LOCTITE® 406 - Instant Adhesive for Plastic and Rubber

**Ordering details: e.g.: Product No. 140 733 09, Loctite 406, Cont. 20 g**

| Product No. | Contents in g | Packaging Type | Weight in g |
|---|---|---|---|
| **140 733 09** | 20 | Bottle | 31 |

**Specifications**
- Temperature range: to +80°C.
- Handling strength (steel at +22°C and 50% air humidity): after 10-20 sec.
- Viscosity mPa.s: 20.
- Especially suited for: plastics.

Special instant adhesive for fast bonding of rubbers (incl. EPDM), plastics and elastomers. In combination with the primer Loctite 7239 even hard to bond plastics can be bonded.

**Application examples**
Bonding a silicon rubber piece onto a plastic housing in a car locking unit. Bonding a plastic part onto a fire extinguisher. Producing O-rings with the Loctite O-ring set.

## LOCTITE® 454 - Universal Instant Adhesive, Non-Drip Gel

**Ordering details: e.g.: Product No. 140 733 16, Loctite 454, Contents 3 g**

| Product No. | Contents in g | Packaging Type | Weight in g |
|---|---|---|---|
| **140 733 16** | 3 | Tube | 5 |
| **140 733 17** | 10 | Syringe | 18 |
| **140 733 18** | 20 | Tube | 32 |

**Specifications**
- Temperature range: to +80°C.
- Handling strength (steel at +22°C and 50% air humidity): after 5-20 sec.
- Viscosity: gel.
- Especially suited for: porous materials.

**Approvals**
- P1 NSF Reg. No.: 123009.

Universal, instant adhesive gel can be used for bonding metals, composite materials, wood, cork, foam plastic, leather, cardboard, paper and ceramics. Good gap filling capability. Recommended for use on vertical surfaces or when working overhead. Can also be used with automated processing systems.

**Application examples**
Bonding rubber door stops onto walls. Bonding plastic signs onto wooden doors. Bonding rubber treads onto the steps of an aluminium ladder.

## LOCTITE® 4850 - Flexible Instant Adhesive

**Ordering details: e.g.: Product No. 140 733 24, Loctite 4850, Cont. 5 g**

| Product No. | Contents in g | Packaging Type | Weight in g |
|---|---|---|---|
| **140 733 24** | 5 | Bottle | 18 |
| **140 733 26** | 20 | Bottle | 31 |

**Specifications**
- Temperature range: to 70°C.
- Handling strength (steel at +22°C and 50% air humidity): after 5-20 sec.
- Viscosity mPa.s: 400.
- Especially suited for: flexible materials.

**Approvals**
- P1 NSF Reg. No.: 123011.

Flexible instant adhesive with medium viscosity. Rapid setting, transparent. Especially suited for the assembly and repair of flexible materials and components.

**Application examples**
Bonding of materials for the production and repair of flexible seals and sleeves or the mounting of elastic components.

Safety Data Sheets at www.maedler.de in the section Downloads

## LOCTITE® 518 - Medium Strength Standard Flange Sealant

**Ordering details: e.g.: Product No. 140 734 02, Loctite 518, Cont. 50 ml**

| Product No. | Contents in ml | Packaging Type | Weight in g |
|---|---|---|---|
| **140 734 02** | 50 | Cartridge | 89 |

**Specifications**
- Sealing type: Liquid (acrylic, red).
- Flange type: torsionally rigid.
- Curing type: anaerobic.
- Temperature resistance: -55 to +150°C.
- Instant sealing effect: excellent.
- Oil resistance: excellent.
- Water/glycol resistance: excellent.

One-component, medium strength flange sealant. The curing takes place on metal contact as anaerobic process. Fast curing at room temperature. Not recommended for plastic parts. Seals instantly at low pressure. Bondline gap to 0.5 mm.

**Applications**
Sealing of dimensionally stable flange connections as, e.g., engine and gearbox cover, water-pump flanges and controller housing covers.

## LOCTITE® 5910 - Permanently Elastic Adhesive/Sealant

**Ordering details: e.g.: Product No. 140 734 07, Loctite 5910, Cont. 50 ml**

| Product No. | Contents in ml | Packaging Type | Weight in g |
|---|---|---|---|
| **140 734 07** | 50 | Cartridge | 104 |
| **140 734 08** | 300 | Cartridge | 453 |

**Specifications**
- Sealing type: liquid (silicon, black).
- Flange type: flexible.
- Curing process: air humidity.
- Non sticky: 20 min
- Temperature resistance: + 200°C.
- Instant sealing effect: excellent.
- Oil resistance: excellent.
- Water/glycol resistance: medium.

Permanently elastic flange sealant for non torsionally rigid flange seals. Low odour, little gas emission. Curing at room temperature. High resistance to vibration. Can also be used on plastic parts. Bondline gap to 6 mm.

**Applications**
Sealing of non torsionally rigid flanges which require high oil and vibration resistance, e.g. aluminium oil baths and controller housing covers.

## LOCTITE® 5920 - Permanently Elastic Flange Seal Ultra Copper

**Ordering details: e.g.: Product No. 140 734 12, Loctite 5920, Cont. 40 ml**

| Product No. | Contents in ml | Packaging Type | Weight in g |
|---|---|---|---|
| **140 734 12** | 40 | Tube | 80 |
| **140 734 15** | 300 | Cartridge | 368 |

**Specifications**
- Sealing type: liquid (silicon, cupreous).
- Flange type: flexible.
- Curing process: air humidity.
- Temperature resistance: -60 to +315°C.
- Instant sealing effect: excellent.
- Oil resistance: excellent.
- Water/glycol resistance: excellent.

One-component flange seal that cures at room temperature with excellent temperature resistance. Excellent resistance against motor and gearbox oil. Meets and exceeds manufacturer's specifications of GM and Ford. Short term temperature resistance to +350°C. Sealing gaps to 6 mm.

**Applications**
Sealing of oil pumps, thermostat housings, water pumps, oil baths, gearbox covers etc.

## LOCTITE® 7200 - Adhesive- and Sealant-Remover

**Ordering details: e.g.: Product No. 140 734 20, Loctite 7200, Cont. 400 ml**

| Product No. | Contents in ml | Packaging Type | Weight in g |
|---|---|---|---|
| **140 734 20** | 400 | Spray Can | 423 |

**Specifications**
- Aerosol, amber.
- Active agent: mixture of aliphatic glycol esters etc.
- Expanding agent: propane gas.
- Exposure time 10 to 15 min (with silicon 30 Min.).
- Foam forming, sticks well to vertical surfaces.

Removes hardened seals and adhesives from most metal surfaces within 10 to 15 minutes. Resolves and removes mould, lubricants, soot, caked on oil, fat and paint. Can also be applied on wood.

**Application examples**
Preparation of metal parts prior to the application of seals sealants. No need to grind away or scrape off old sealings, i.e. no unnecessary damage to the surface finish.

*Safety Data Sheets at www.maedler.de in the section Downloads*

## Chain Spray

**Ordering Details:**
**Product No 140 701 00, Chain Spray**

| Product No. | Contents in ml | Weight in g |
|---|---|---|
| 140 701 00 | 400 | 465 |

Special adhesive lubricant for the maintenance of drive chains, rolling bearings, open gear boxes etc..

- strong bonding power.
- highly capable of creep.
- displaces moisture.
- reducing noise.
- protection against wear.
- corrosion protection.
- temperature resistant from -5°C to +140°C.
- silicone-free.

## Spray Cleaner

**Ordering Details:**
**Product No. 140 701 01, Spray Cleaner**

| Product No. | Contents in ml | Weight in g |
|---|---|---|
| 140 701 01 | 500 | 471 |

Degreaser, mould cleaner, brake cleaner.

- degreases and cleans metal, glass, etc..
- resolves resinified residues.
- removes adhesive residues.
- cleans brake and clutch parts.
- can be used for cleaning prior to painting or bonding.
- silicone-free.

## PTFE Spray

**Ordering Details: Product No. 140 701 02, PTFE-Spray**

| Product No. | Contents in ml | Weight in g |
|---|---|---|
| 140 701 02 | 400 | 368 |

Hard-drying permanent separating, lubrication and anti-blocking agent. The substance can be removed using a suitable solvent.

- free of grease, dry and clean.
- water, dust and dirt repellent.
- resistant against many chemicals, water, oils etc..
- temperature resistant from -20°C to +200°C.
- silicone-free.

## Zinc Repair Spray

**Ordering Details: Product No. 140 701 03, Zinc Repair Spray**

| Product No. | Contents in ml | Weight in g |
|---|---|---|
| 140 701 03 | 400 | 389 |

Heavy-duty, fast drying spray for the repair of zinc-plated surfaces.

- colour: light silver, glossy finish similar to zinc.
- optically almost indistinguishable from hot-dip zinc coating.
- protection against corrosion by zinc-aluminium pigments and resins.
- can be used to repair the zinc surface after welding.
- temperature resistant to +200°C.
- silicone-free.

## Long-Term Corrosion Protection Spray

**Ordering Details.: Product No. 140 701 04, Long-Term Corrosion Protection Spray**

| Product No. | Contents in ml | Weight in g |
|---|---|---|
| 140 701 04 | 400 | 378 |

Reliable long term protection against corrosion and oxidation for all steel and metal parts.

- The strong-bonding, ceraceous protective film is resistant against water and salt water.
- long-term conservation even in a chemically aggressive environment.
- highly capable of creep, displaces moisture, bonds even to vertical surfaces.
- temperature resistant to +100°C.
- silicone-free.

## Aluminium Spray

**Ordering Details:**
**Product No. 140 701 06, Aluminium Spray**

| Product No. | Contents in ml | Weight in g |
|---|---|---|
| 140 701 06 | 400 | 465 |

Heavy-duty, fast drying spray for the repair of aluminium surfaces and also for decoration.

- protection against corrosion by aluminium pigments and resins.
- abrasion resistant.
- fast drying.
- temperature resistant to +80°C.
- silicone-free.

## Multi-Function Spray WD-40® Smart Straw™

**Ordering Details: e.g.: Product No. 140 701 05, Multi-Function Spray WD-40**

| Product No. | Contents in ml | Weight in g |
|---|---|---|
| 140 701 05 | 500 | 537 |

Multiple use spray.

- displacement of moisture.
- penetrating oil.
- corrosion protection.
- cleaner.
- lubricant.
- silicone-free.

## Stainless-Steel Spray

**Ordering Details**
**Product No. 140 701 07, Stainless-Steel Spray**

| Product No. | Contents in ml | Weight in g |
|---|---|---|
| 140 701 07 | 400 | 465 |

Heavy-duty, fast drying spray for the repair of stainles steel surfaces and also for decoration.

- to touch up damaged stainless steel surfaces.
- reliable protection against corrosion even in extreme weather conditions.
- effective surface coating for all metal parts, most plastics, wood, stone, cardboard, glass, etc.
- abrasion resistant.
- temperature resistant to +250°C.
- silicone-free.

***Safety Data Sheets at www.maedler.de in the section Downloads***

# GENERAL TECHNICAL INFORMATION

## Mounting Options for Drive Wheels

There are several possibilities for mounting driving wheels (sprockets, V-Belt Pulleys, pulleys, spur gears etc.) or hubs on shafts. Most wheels are stocked with a rather small bore to allow for further machining. Machining works as drilling out, keywaying a.s.o. can be done at extra charge.

**Please note:** for several shaft diameters a number of sprockets, V-belt pulleys, spur gears and worm-gear sets are in stock "ready-to-install", i.e. with custom bore and keyway or prepared for Taper clamping bushes.

## Fixing Pins

A hole is drilled through hub and shaft and both parts are then connected with a fixing pin. Usually only one side of the hub is pre-drilled, then the wheel is pushed onto the shaft and the hole is drilled through both shaft and the other side of the hub. Then the pin is driven in. This mounting method is suitable for low torques.

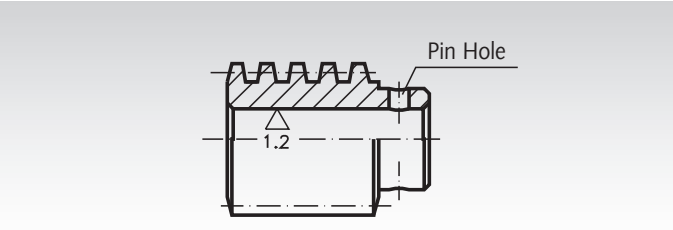


## Feather Key Connection

Shaft and hub both receive a keyway, a key is pushed into the keyway of the hub. The wheel is pushed onto the shaft and secured against axial movement (with a set screw or with a stepped shaft and axial screw and washer at the end of the shaft). The most common kind of keyway is DIN 6885/1. Key connections are suitable for medium torques. Keys DIN 6885 see page 578. Boxes with an assortment of keys DIN 6885 see page 577.

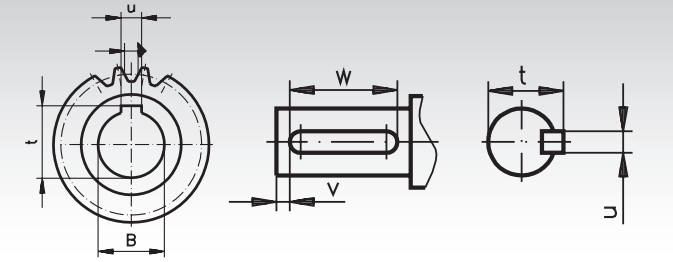


## Clamping Sets, Clamping Bushes and Shrink Disks

Clamping sets and thin-walled clamping bushes are available for various diameters. They allow fast and easy mounting on round shafts. A keyway is not required. Shrink disks are special clamping sets which press a thin-walled hub onto a shaft. Clamping connections are suitable for rather high torques. **Clamping sets and bushes, and shrink disks** see page 330.

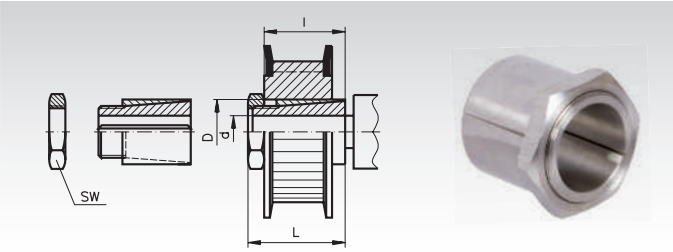


## Taper Clamping Bushes

These customary conical bushes are used for easy and fast mounting of driving elements in Taper version. They can be used with and without key.

The bushes are available with various outer dimensions. For every outside measure there are bushes with many different bores available. This mounting method is cost-efficient and fast, and suitable for rather high torques. A large selection of cost-efficient driving elements in Taper version are available ex stock.

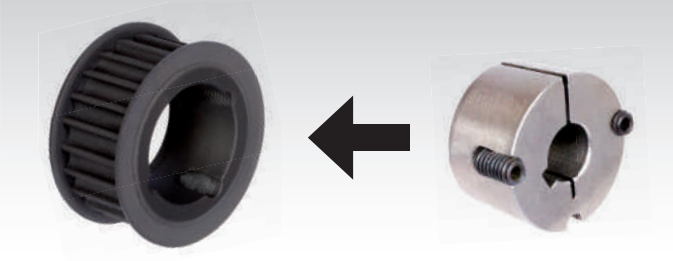

Taper clamping bushes see page 360.
Welding hubs for taper bushes see page 362.
Taper sprockets see page 74, 92, 101.
Taper V-belt pulleys see page 183.
Taper pulleys see page 154.
Taper couplings see page 388.

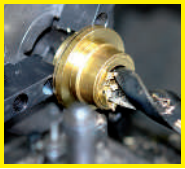

**Reworking within 24h-service possible. Custom made parts on request.**

## General Tolerances for Keyways DIN 6885 (Dimensions in mm)

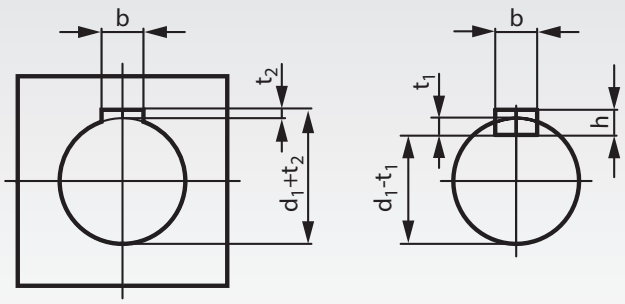


### High Version Form (Sheet 1)

| For Shaft-Ø $d_1$ over | to | Shaft Keyway b* Tight Fit P9 Loose Fit N9 | Hub Keyway b* Tight Fit P9 Loose Fit JS9 | h | $t_1$ with Clearance | $t_2$ with Clearance | $t_2$ with Oversize | Fastening Thread Recommend |
|---|---|---|---|---|---|---|---|---|
| 6 | 8 | 2 | 2 | 2 | $1{,}2^{+0{,}1}$ | $1{,}0^{+0{,}1}$ | – | M3 |
| 8 | 10 | 3 | 3 | 3 | $1{,}8^{+0{,}1}$ | $1{,}4^{+0{,}1}$ | $0{,}9^{+0{,}1}$ | M3 |
| 10 | 12 | 4 | 4 | 4 | $2{,}5^{+0{,}1}$ | $1{,}8^{+0{,}1}$ | $1{,}2^{+0{,}1}$ | M5 |
| 12 | 17 | 5 | 5 | 5 | $3{,}0^{+0{,}1}$ | $2{,}3^{+0{,}1}$ | $1{,}7^{+0{,}1}$ | M6 |
| 17 | 22 | 6 | 6 | 6 | $3{,}5^{+0{,}1}$ | $2{,}8^{+0{,}1}$ | $2{,}2^{+0{,}1}$ | M6 |
| 22 | 30 | 8 | 8 | 7 | $4{,}0^{+0{,}2}$ | $3{,}3^{+0{,}2}$ | $2{,}4^{+0{,}2}$ | M8 |
| 30 | 38 | 10 | 10 | 8 | $5{,}0^{+0{,}2}$ | $3{,}3^{+0{,}2}$ | $2{,}4^{+0{,}2}$ | M8 |
| 38 | 44 | 12 | 12 | 8 | $5{,}0^{+0{,}2}$ | $3{,}3^{+0{,}2}$ | $2{,}4^{+0{,}2}$ | M8 |
| 44 | 50 | 14 | 14 | 9 | $5{,}5^{+0{,}2}$ | $3{,}8^{+0{,}2}$ | $2{,}9^{+0{,}2}$ | M10 |
| 50 | 58 | 16 | 16 | 10 | $6{,}0^{+0{,}2}$ | $4{,}3^{+0{,}2}$ | $3{,}4^{+0{,}2}$ | M10 |
| 58 | 65 | 18 | 18 | 11 | $7{,}0^{+0{,}2}$ | $4{,}4^{+0{,}2}$ | $3{,}4^{+0{,}2}$ | M12 |

### High Version for Machine Tools (Sheet 2)

| For Shaft-Ø $d_1$ over | to | Shaft Keyway b* Tight Fit P9 Loose Fit N9 | Hub Keyway b* Tight Fit P9 Loose Fit JS9 | h | $t_1$ with Clearance | $t_2$ with Clearance | Fastening Thread Recommend |
|---|---|---|---|---|---|---|---|
| 10 | 12 | 4 | 4 | 4 | $3{,}0^{+0{,}1}$ | $1{,}1^{+0{,}1}$ | M5 |
| 12 | 17 | 5 | 5 | 5 | $3{,}8^{+0{,}1}$ | $1{,}3^{+0{,}1}$ | M6 |
| 17 | 22 | 6 | 6 | 6 | $4{,}4^{+0{,}1}$ | $1{,}7^{+0{,}1}$ | M6 |
| 22 | 30 | 8 | 8 | 7 | $5{,}4^{+0{,}2}$ | $1{,}7^{+0{,}2}$ | M8 |
| 30 | 38 | 10 | 10 | 8 | $6{,}0^{+0{,}2}$ | $2{,}1^{+0{,}2}$ | M8 |
| 38 | 44 | 12 | 12 | 8 | $6{,}0^{+0{,}2}$ | $2{,}1^{+0{,}2}$ | M8 |
| 44 | 50 | 14 | 14 | 9 | $6{,}0^{+0{,}2}$ | $2{,}6^{+0{,}2}$ | M10 |
| 50 | 58 | 16 | 16 | 10 | $7{,}5^{+0{,}2}$ | $2{,}6^{+0{,}2}$ | M10 |

*The tolerance fields stated for the keyway width usually refer to milled keyways.
For the width of reamed keyways ISO-quality IT8 (i.e. P8 instead of P9, N8 instead of N9 and JS8 instead of JS9) is recommended.
For sliding fit tolerance field H9 for for the shaft keyway and D10 for the hub keyway are recommended.

## General Tolerances for Length Dimensions (DIN ISO 2768 T1)

| Tolerance Class Short Symbol | Description | Limiting Sizes in mm for Nominal Measuring Range 0.5 to 3 | over 3 to 6 | over 6 to 30 | over 30 to 120 | over 120 to 400 | over 400 to 1000 | over 1000 to 2000 | over 2000 to 4000 |
|---|---|---|---|---|---|---|---|---|---|
| f | fine | ±0.05 | ±0.05 | ±0.1 | ±0.15 | ±0.2 | ±0.3 | ±0.5 | - |
| m | medium | ±0.1 | ±0.1 | ±0.2 | ±0.3 | ±0.5 | ±0.8 | ±1.2 | ±2 |
| c | rough | ±0.2 | ±0.3 | ±0.5 | ±0.8 | ±1.2 | ±2 | ±3 | ±4 |
| v | very rough | - | ±0.5 | ±1 | ±1.5 | ±2.5 | ±4 | ±6 | ±8 |

## General Tolerances for the Radius of Curvature and Angular Dimensions (DIN ISO 2768 T1)

| Tolerance Class Short Symbol | Description | Radius of Curvature and Chamfers Limiting Sizes in mm for Nominal Measuring Range 0.5 to 3 | over 3 to 6 | over 6 | Angular dimensions Limiting Sizes in Degrees and Minutes for Nominal Measuring Range (Short Side) to 10 | over 10 to 50 | over 50 to 120 | over 120 to 400 | over 400 |
|---|---|---|---|---|---|---|---|---|---|
| f | fine | ±0.2 | ±0.5 | ±1 | ±1° | ±0°30′ | ±0°20′ | ±0°10′ | ±0°5′ |
| m | medium | ±0.2 | ±0.5 | ±1 | ±1° | ±0°30′ | ±0°20′ | ±0°10′ | ±0°5′ |
| c | rough | ±0.4 | ±1 | ±2 | ±1°30′ | ±1° | ±0°30′ | ±0°15′ | ±0°10′ |
| v | very rough | ±0.4 | ±1 | ±2 | ±3° | ±2° | ±1° | ±0°30′ | ±0°20′ |

## General Tolerances for Shape and Situation (DIN ISO 2768 T2)

| Tolerance Class | Straightness and Planeness Nominal Range in mm to 10 | over 10 to 30 | over 30 to 100 | over 100 to 300 | over 300 to 1000 | over 1000 to 3000 | Right Angularity Nominal Range in mm to 100 | over 100 to 300 | over 300 to 1000 | over 1000 to 3000 | Symmetry Nominal Range in mm to 100 | over 100 to 300 | over 300 to 1000 | over 1000 to 3000 | Running |
|---|---|---|---|---|---|---|---|---|---|---|---|---|---|---|---|
| H | 0,02 | 0,05 | 0,1 | 0,2 | 0,3 | 0,4 | 0,2 | 0,3 | 0,4 | 0,5 | 0,5 | 0,5 | 0,5 | 0,5 | 0,1 |
| K | 0,05 | 0,1 | 0,2 | 0,4 | 0,6 | 0,8 | 0,4 | 0,6 | 0,8 | 1 | 0,6 | 0,6 | 0,8 | 1 | 0,2 |
| L | 0,1 | 0,2 | 0,4 | 0,8 | 1,2 | 1,6 | 0,6 | 1 | 1,5 | 2 | 0,6 | 1 | 1,5 | 2 | 0,5 |

## ISO - Tolerances for Shafts and Bores

**Bore Tolerances:**
Marked by capital letter and number. The capital letter signifies the position of the tolerance field in relation to the nominal dimension. The number is a reference number signifying the tolerance grade. The bigger this reference number, the bigger is the tolerance field, see table.

**Shaft Tolerances:**
Marked by small letter and number. The small letter signifies the position of the tolerance field in relation to the nominal dimension. The number is a reference number signifying the tolerance grade. The bigger this reference number, the bigger is the tolerance field, see table.

### Bore Tolerance, Top and Bottom Dimensions in µm

| Nominal-Ø Bore (mm) | | E8 | | E9 | | F7 | | G7 | | H6 | | H7 | | H8 | | H9 | |
|---|---|---|---|---|---|---|---|---|---|---|---|---|---|---|---|---|---|
| Over | to | Top | Bottom | Top | Bottom | Top | Bottom | Top | Bottom | Top | Bottom | Top | Bottom | Top | Bottom | Top | Bottom |
| 3 | 6 | +38 | +20 | +50 | +20 | +22 | +10 | +16 | +4 | +8 | 0 | +12 | 0 | +18 | 0 | +30 | 0 |
| 6 | 10 | +47 | +25 | +61 | +25 | +28 | +13 | +20 | +5 | +9 | 0 | +15 | 0 | +22 | 0 | +36 | 0 |
| 10 | 18 | +59 | +32 | +75 | +32 | +34 | +16 | +24 | +6 | +11 | 0 | +18 | 0 | +27 | 0 | +43 | 0 |
| 18 | 30 | +73 | +40 | +92 | +40 | +41 | +20 | +28 | +7 | +13 | 0 | +21 | 0 | +33 | 0 | +52 | 0 |
| 30 | 50 | +89 | +50 | +112 | +50 | +50 | +25 | +34 | +9 | +16 | 0 | +25 | 0 | +39 | 0 | +62 | 0 |
| 50 | 80 | +106 | +60 | +134 | +60 | +60 | +30 | +40 | +10 | +19 | 0 | +30 | 0 | +46 | 0 | +74 | 0 |
| 80 | 120 | +126 | +72 | +159 | +72 | +71 | +36 | +47 | +12 | +22 | 0 | +35 | 0 | +54 | 0 | +87 | 0 |
| 120 | 180 | +148 | +85 | +185 | +85 | +83 | +43 | +54 | +14 | +25 | 0 | +40 | 0 | +63 | 0 | +100 | 0 |
| 180 | 250 | +172 | +100 | +215 | +100 | +96 | +50 | +61 | +15 | +29 | 0 | +46 | 0 | +72 | 0 | +115 | 0 |

| Nominal-Ø Bore (mm) | | H11 | | J7 | | JS9 | | JS10 | | K7 | | M7 | | N7 | | P9 | |
|---|---|---|---|---|---|---|---|---|---|---|---|---|---|---|---|---|---|
| Over | to | Top | Bottom | Top | Bottom | Top | Bottom | Top | Bottom | Top | Bottom | Top | Bottom | Top | Bottom | Top | Bottom |
| 3 | 6 | +75 | 0 | +5 | -7 | +15 | -15 | +24 | -24 | - | - | 0 | -12 | -4 | -16 | -12 | -42 |
| 6 | 10 | +90 | 0 | +8 | -7 | +18 | -18 | +29 | -29 | +5 | -10 | 0 | -15 | -4 | -19 | -15 | -51 |
| 10 | 18 | +110 | 0 | +10 | -8 | +22 | -22 | +35 | -35 | +6 | -12 | 0 | -18 | -5 | -23 | -18 | -61 |
| 18 | 30 | +130 | 0 | +12 | -9 | +26 | -26 | +42 | -42 | +6 | -15 | 0 | -21 | -7 | -28 | -22 | -74 |
| 30 | 50 | +160 | 0 | +14 | -11 | +31 | -31 | +50 | -50 | +7 | -18 | 0 | -25 | -8 | -33 | -26 | -88 |
| 50 | 80 | +190 | 0 | +18 | -12 | +37 | -37 | +60 | -60 | +9 | -21 | 0 | -30 | -9 | -39 | -32 | -106 |
| 80 | 120 | +220 | 0 | +22 | -13 | +44 | -44 | +70 | -70 | +10 | -25 | 0 | -35 | -10 | -45 | -37 | -124 |
| 120 | 180 | +250 | 0 | +26 | -14 | +50 | -50 | +80 | -80 | +12 | -28 | 0 | -40 | -12 | -52 | -43 | -143 |
| 180 | 250 | +290 | 0 | +30 | -16 | +58 | -58 | +93 | -93 | +13 | -33 | 0 | -46 | -14 | -60 | -50 | -165 |

### Shaft Tolerances, Top and Bottom Dimensions in µm

| Nominal-Ø of the Shaft (mm) | | e8 | | f7 | | f8 | | g6 | | h6 | | h7 | | h8 | | h9 | |
|---|---|---|---|---|---|---|---|---|---|---|---|---|---|---|---|---|---|
| Over | to | Top | Bottom | Top | Bottom | Top | Bottom | Top | Bottom | Top | Bottom | Top | Bottom | Top | Bottom | Top | Bottom |
| 3 | 6 | -20 | -38 | -10 | -22 | -10 | -28 | -4 | -12 | 0 | -8 | 0 | -12 | 0 | -18 | 0 | -30 |
| 6 | 10 | -25 | -47 | -13 | -28 | -13 | -35 | -5 | -14 | 0 | -9 | 0 | -15 | 0 | -22 | 0 | -36 |
| 10 | 18 | -32 | -59 | -16 | -34 | -16 | -43 | -6 | -17 | 0 | -11 | 0 | -18 | 0 | -27 | 0 | -43 |
| 18 | 30 | -40 | -73 | -20 | -41 | -20 | -53 | -7 | -20 | 0 | -13 | 0 | -21 | 0 | -33 | 0 | -52 |
| 30 | 50 | -50 | -89 | -25 | -50 | -25 | -64 | -9 | -25 | 0 | -16 | 0 | -25 | 0 | -39 | 0 | -62 |
| 50 | 80 | -60 | -106 | -30 | -60 | -30 | -76 | -10 | -29 | 0 | -19 | 0 | -30 | 0 | -46 | 0 | -74 |
| 80 | 120 | -72 | -126 | -36 | -71 | -36 | -90 | -12 | -34 | 0 | -22 | 0 | -35 | 0 | -54 | 0 | -87 |
| 120 | 180 | -85 | -148 | -43 | -83 | -43 | -106 | -14 | -39 | 0 | -25 | 0 | -40 | 0 | -63 | 0 | -100 |
| 180 | 250 | -100 | -172 | -50 | -96 | -50 | -122 | -15 | -44 | 0 | -29 | 0 | -46 | 0 | -72 | 0 | -115 |

| Nominal-Ø of the Shaft (mm) | | h11 | | j6 | | k6 | | m6 | | n6 | | p6 | | r6 | | s6 | |
|---|---|---|---|---|---|---|---|---|---|---|---|---|---|---|---|---|---|
| Over | to | Top | Bottom | Top | Bottom | Top | Bottom | Top | Bottom | Top | Bottom | Top | Bottom | Top | Bottom | Top | Bottom |
| 3 | 6 | 0 | -75 | +7 | -1 | - | - | +12 | +4 | +16 | +8 | +20 | +12 | +23 | +15 | +27 | +19 |
| 6 | 10 | 0 | -90 | +7 | -2 | +10 | +1 | +15 | +6 | +19 | +10 | +24 | +15 | +28 | +19 | +32 | +23 |
| 10 | 18 | 0 | -110 | +8 | -3 | +12 | +1 | +18 | +7 | +23 | +12 | +29 | +18 | +34 | +23 | +39 | +28 |
| 18 | 30 | 0 | -130 | +9 | -4 | +15 | +2 | +21 | +8 | +28 | +15 | +35 | +22 | +41 | +28 | +48 | +35 |
| 30 | 50 | 0 | -160 | +11 | -5 | +18 | +2 | +25 | +9 | +33 | +17 | +42 | +26 | +50 | +34 | +59 | +43 |
| 50 | 80 | 0 | -190 | +12 | -7 | +21 | +2 | +30 | +11 | +39 | +20 | +51 | +32 | +62 | +43 | +78 | +59 |
| 80 | 120 | 0 | -220 | +13 | -9 | +25 | +3 | +35 | +13 | +45 | +23 | +59 | +37 | +76 | +54 | +101 | +79 |
| 120 | 180 | 0 | -250 | +14 | -11 | +28 | +3 | +40 | +15 | +52 | +27 | +68 | +43 | +93 | +68 | +133 | +108 |
| 180 | 250 | 0 | -290 | +16 | -13 | +33 | +4 | +46 | +17 | +60 | +31 | +79 | +50 | +113 | +84 | +169 | +140 |

## Fits: Application of Common Shaft Tolerances and Bore Tolerances

**Hole basis fit:**
The fits stated below are for the common, standard bores with the matching shaft.

**Shaft basis fit:**
Stated are the fits for the common, standard shafts with the matching bores.

### Press and Transition Fits

| Name of Fit | Basic Bore with Shaft | Bore with Basic Shaft |
|---|---|---|
| **Press fit:** parts can be fitted using strong pressure or through heating or cooling; bronze rims on gear bodies, bearing bushes in housings, wheel hubs, lever hubs etc., couplings on shaft ends. Needs no extra securing against turning. | H7 / s6<br>H7 / r6 | S7 / h6<br>R7 / h6 |
| **Driving fit:** parts can be fitted using pressure; wheel rims on wheel bodies, bearing bushes in housings and round hubs, pulleys on axes, rotors on motor shafts, couplings on shaft ends, drill bushings. Has to be secured against turning. | H7 / n6 | N7 / h6 |
| **Force fit:** parts can be fitted using a wooden hammer; gearing, belt pulleys on shorter shafts, couplings on shaft ends, piston pin, tight cylinder bolts. Has to be secured against turning. | H7 / m6 | M7 / h6 |
| **Tight fit:** parts can be easily fitted using a hand-held hammer; gearing, belt pulleys, couplings, hand wheels, brake disks on longer shafts and shaft ends. Has to be secured against turning. | H7 / k6 | K7 / h6 |
| **Sliding fit:** parts can be fitted with a hammer or by hand; for easily assembled or disassembled gears, belt pulleys, hand wheels, bushes. Has to be secured against turning. | H7 / j6 | J7 / h6 |

### Clearance Fit

| Name of Fit | Basic Bore with Shaft | Bore with Basic Shaft |
|---|---|---|
| **Sliding fit:** parts can just be moved by hand; for sliding parts and guides, centring flanges, change gears, tailstock sleave, adjusting rings. | H7 / h6 | H7 / h6 |
| **Tight running fit:** parts that can be moved without noticeable play; cange gears, moveable wheels, clutches. | H7 / g6 | G7 / h6 |
| **Running fit:** parts that can be moved with noticeable play; slide bearings in general, main bearings in machine tools, slide bushes on shafts. | H7 / f7 | F7 / h6 |
| **Loose running fit:** parts with generous play; shafts with multiple bearings (slide bearings), slide bearings in general. | H7 / e8 | E8 / h6 |
| **Sliding fit:** parts can be easily moved; gears to be pushed on shafts, disks, slidable clutches, spacer sleeves. | H8 / h9 | H8 / h9 |
| **Loose running fit:** parts with generous play; main bearings of crankshafts, pistons in cylinders, pump bearings and lever bearings. | H8 / e8 | E9 / h9 |

## Material Standards Thermoplast, Non-Reinforced (at +23°C)

Acetal and POM are types of Polyoxymethylen-Copolymers (also called Polyacetal-Copolymers).
Chemically, both materials are nearly the same.

**Acetal** = moulded parts: Low cost, but not very precisely.

**POM** = turned / milled parts: More expensive, but higher precision.

| | | | POM | Acetal (Resin) |
|---|---|---|---|---|
| Mechanical Data | Characteristic | - | opaque vitreous | opaque vitreous |
| | Density | p g/cm³ | 1.41 | 1.41 |
| | Yield stress | $\sigma_S$ N/mm² | 68 | 65 |
| | Elongation at break | $\varepsilon_R$ % | 25 - 40 | 40 |
| | Bulk modulus (Tensile Test) | Ez N/mm² | 3100 | 3100 |
| | Ball hardness (10 s) | $H_K$ N/mm² | 140 | 140 |
| | Impact Strength | $a_n$ kJ/m² | n. a. | n. a. |
| | Creep strength after 1000 h at static load | $\sigma_{S,\,1000}$ N/mm² | 40 | 40 |
| | Creep stress for 1% elongation after 1000 h | $\sigma_{1,\,1000}$ N/mm² | 13 | 13 |
| | Coeff. of sliding friction p=0.05 N/mm² v=0.6 m/s against steel hardened and ground | μ - | 0.32 | 0.32 |
| Thermal Data | Sliding wear Conditions as above | V µm/km | 4.6 | 8.9 |
| | Melting point Ts or dynamic glass transition temp. Tu• | Ts Tu °C | 165 | 165 |
| | Heat resistance acc. to ISO-R75 . A | $F_{iso}$ °$C_i$ A B | 105 | 110 |
| | Temperature limit of the application Short term | Tmo °C | 140 | 140 |
| | Temperature limit of the application Permanent | Tmt °C | 100 | 100 |
| | Thermal diffusivity | λ w K · m | 0.31 | 0.31 |
| | Specific heat capacity | c kJ/kg · K | 1.5 | 1.5 |
| | Linear coefficient of expansion at +20°C | α $10^{-5}$ · 1/°C | 10 | 10 |

| | | | POM | Acetal (Resin) |
|---|---|---|---|---|
| Electrical Data | Dielectric constant ($10^5$ Hz) | εr – | 3.7 | 3.5 |
| | Dielectric loss factor ($10^5$ Hz) | tanδ - | 0.005 | 0.003 |
| | Specific volume resistance | pD Ohm · m | $10^{14}$ | $10^{14}$ |
| | Dielectric strength | Ed kV/mm | > 20 | > 20 |
| | Creep resistance | - - | KA 3c | KA 3c |
| Various Data | Moisture absorption NK 23/50 (satiable) | $C_{WN}$ % | 0.3 | 0.3 |
| | Water absorption (satiable) | Cws % | 0.2 | 0.5 |
| | Max. elongation due to moisture in NK 23/50 | ΔI/IN % | 0.15 | 0.1 |
| | Combustibility acc. to ASTM D 635 bz. UL-55 | – – | b. | b. |
| | Performance at outdoor exposure | | – (UV sensitive) | – (UV sensitive) |
| Chemical Resistance | Acids diluted | | – | – |
| | Alkali (lyes), diluted | | + | + |
| | Hydrocarbons Saturated oils, fats | | + | + |
| | Aromatic compounds (benzol), fuels | | + | + |
| | Ketone, Ester | | (+) | (+) |
| | Chlorinated hydro carbon (trichloroethylene) | | – | – |
| | Hot water, laundry lye | | – | (+) |

\+ = resistant
(+) = limited resistance
– = non-resistant

The values were calculated from various spot checks taken as average values. If nothing else is stated, the test was carried out using plastic die casts. Standard tests are carried out in the standard climate 23/50 according to DIN 50 014

**Food compatibility**
For external contact to food at short time , both kinds of plastic are physiological harmless. Please follow the federal law and regulations for your country. Also pay attention to your special operation conditions (for example temperature, ph-value of food).

Some plastics of different suppliers have a FDA-certicicate (Food and Drugs Association of the USA). The plastics should not be in contact with food with more than 15% Alcohol or with a ph-value below 2.5.

**Weather resistance**
Acetal and POM are negatively affected by ultraviolet light, its good physical properties get worse if it is exposed to sunlight over a longer period. Remedy: use light-stabilized types.

## Thread Dimensions and Fastening Torques

**Thread designations:** DIN/ISO Standard Threads with metrical sizes are designated without naming the pitch. The pitch is only named, if it is a special pitch (e.g. fine thread M14x1.5).

**Validity:** The sizes are like DIN 261 for metrical standard threads. The fastening torques are valid for common machine bolts with standard hexagon head or internal hexagon head.

**Calculation basics:**
Screw yield: 90% use.
Friction coefficient μ = 0.14 (new bolt).

**Note:** These torques are common clues. The nut thread (thread bore in casing) has to be strong enough.
Special bolts may need diverse torques.
The instructions of the machine producer must be followed.
For screws with special coating or screws with very slidy grease (e.g. with MoS2) the fastening torques must be reduced.

| Dimensions | | | Strength / Fastening Torque | | | | | | STAINLESS |
|---|---|---|---|---|---|---|---|---|---|
| Thread | Pitch | Bore hole* | 4.6 | 5.6 | 6.9 | 8.8 | 10.9 | 12.9 | A2-70** |
| Size | mm | mm | Nm | Nm | Nm | Nm | Nm | Nm | Nm |
| **M2** | 0,4 | 1,6 | 0,123 | 0,162 | 0,314 | 0,373 | 0,520 | 0,628 | ? |
| **M2,5** | 0,45 | 2,05 | 0,284 | 0,373 | 0,726 | 0,863 | 1,206 | 1,451 | ? |
| **M3** | 0,5 | 2,5 | 0,441 | 0,588 | 1,128 | 1,344 | 1,883 | 2,256 | ? |
| **M3,5** | 0,6 | 2,9 | 0,677 | 0,902 | 1,736 | 2,060 | 2,893 | 3,481 | ? |
| **M4** | 0,7 | 3,3 | 1,00 | 1,34 | 2,60 | 3,04 | 4,32 | 5,15 | ? |
| **M5** | 0,8 | 4,2 | 1,92 | 2,65 | 5,10 | 6,03 | 8,48 | 10,20 | 5,30 |
| **M6** | 1 | 5 | 3,43 | 4,51 | 8,73 | 10,30 | 14,71 | 17,65 | 9,10 |
| **M8** | 1,25 | 6,8 | 8,24 | 10,79 | 21,58 | 25,50 | 35,3 | 42,2 | 21,8 |
| **M10** | 1,5 | 8,5 | 16,67 | 21,58 | 42,17 | 50,0 | 70,6 | 85,3 | 44,0 |
| **M12** | 1,75 | 10,2 | 28,4 | 38,2 | 73,6 | 87,3 | 123 | 147 | 75,0 |
| **M14** | 2 | 12 | 45,1 | 60,8 | 117 | 138 | 194 | 235 | 118 |
| **M16** | 2 | 14 | 69,6 | 93,2 | 179 | 211 | 299 | 358 | 180 |
| **M18** | 2,5 | 15,5 | 95,1 | 128 | 245 | 289 | 412 | 490 | 250 |
| **M20** | 2,5 | 17,5 | 135 | 180 | 384 | 412 | 579 | 696 | 352 |
| **M22** | 2,5 | 19,5 | 182 | 245 | 471 | 559 | 785 | 941 | 338 |
| **M24** | 3 | 21 | 231 | 309 | 598 | 711 | 1000 | 1196 | 494 |
| **M27** | 3 | 24 | 343 | 461 | 888 | 1049 | 1481 | 1775 | 674 |
| **M30** | 3,5 | 26,5 | 466 | 623 | 1206 | 1422 | 2010 | 2403 | ? |
| **M33** | 3,5 | 29,5 | 633 | 848 | 1628 | 1932 | 2716 | 3266 | ? |
| **M36** | 4 | 32 | 814 | 1089 | 2099 | 2481 | 3491 | 4197 | ? |

* Recommend bore size for threading.
** Stainless, medium strength.

## Special Fastening Torques for some MÄDLER® Products

The fastening torques in the table are for following MÄDLER® Products:
Clamp collars single split and double split, rigid couplings TR, MAS and MAT.

| | Fastening Torque | | | |
|---|---|---|---|---|
| | clamp hub screw | | set screw | |
| Thread | Steel | Stainless Steel | Steel | Stainless Steel |
| Size | Nm | Nm | Nm | Nm |
| **M2** | 0,60 | 0,36 | — | — |
| **M2,5** | 1,21 | 0,73 | 0,57 | 0,44 |
| **M3** | 2,10 | 1,10 | 0,92 | 0,73 |
| **M4** | 4,60 | 2,50 | 2,20 | 1,76 |
| **M5** | 9,5 | 5,4 | 4,0 | 3,2 |
| **M6** | 16,0 | 9,6 | 7,2 | 5,8 |
| **M8** | 39,0 | 23,0 | 17,0 | 13,6 |
| **M10** | 77,0 | 46,0 | 33,0 | 26,4 |

# Operating and maintenance instructions

## on the internet at www.maedler.de

## in the Section Downloads

On our website you can find operating and maintenance instructions in various languages for all our technically-sophisticated products. We are continuously extending this list of instructions.

| Instructions available: | Language | | |
|---|---|---|---|
| Bevel Gearboxes DZA, DZR | German | English | French |
| Bevel Gearboxes KU/I, KUM | German | English | French |
| Chain Tensioners SPANNBOX®, SPANNBOY® | Deutsch | English | |
| Continuously Variable Geared Motors MUN/I | German | English | |
| Couplings DX | German | English | |
| Couplings RN, RNG, RNH, RNI, RNK, RNT | German | English | |
| Couplings BW / BOS / BOZ | German | English | French |
| Electronic Drip Oilers ELO | German | English | |
| Frequency Converters FU6 | German | | |
| Frequency Converters RoFre 897 | German | | |
| Helical Gear Boxes BT/I | German | English | |
| Helical Geared Motor HR/I | German | English | |
| Helical Geared Motor NR/I | German | English | French |
| Linear Drives (Actuator Systems) GR/I | German | English | |
| Motor Controllers SFRG 05 | German | | |
| Motor Controllers SFRG 3 | German | | |
| Precision Worm Gear Sets | German | | |
| Safety Clutches CM | German | | |
| Safety Clutches SI | German | English | French |
| Shaft Mounted Gearboxes BOC/I | German | English | |
| Sliding Hubs FA | German | | |
| Sliding Hubs FS | German | English | |
| Sliding Hubs ROBA® | German | | |
| Sliding Hubs with Coupling RNR | German | | |
| Slip Clutches KF | German | English | |
| Slip Clutches R2, R6 | German | | |
| Standard Three-Phase-Motors SM/I | German | | |
| Taper Bushes | German | English | French |
| Telescopic Slides Accuride | German | English | French |
| Worm Geared Motors HMD I / HMD II | German | English | French |
| Worm-Geared Motors MEG / MEK / MH / MZ | German | English | French |
| Worm-Geared Motors R / RH / RL / RM / RS | German | English | French |
| Worm-Geared Motors SRM / SRS | German | English | French |
| Worm-Geared Motors SZM, ZMD | German | English | French |
| Worm Gear Screw Jacks NP/I | German | | |
| Worm Gear Units G/II | German | English | French |
| Worm Gear Units ZM | German | English | French |

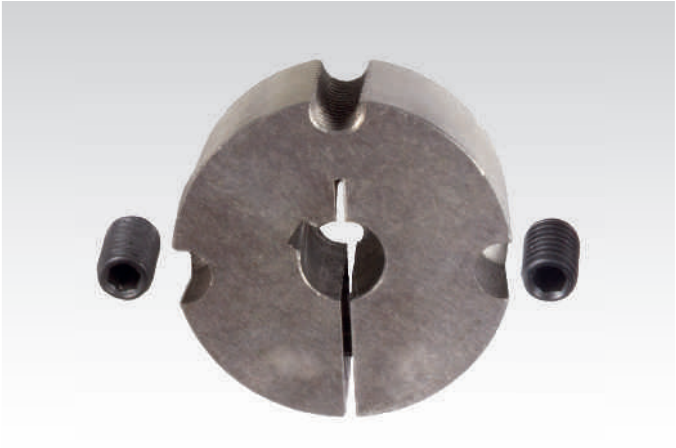

## General Description

Customary, conical slotted clamping bush with feather keyway for an easy and fast mounting of driving elements on shafts.

## Versions of Taper Bushes

The bushes are available with various outer dimensions. For every outer dimension, there are a large number of bore sizes matching several shaft diameters. The bushes are always supplied with a feather keyway DIN 6885.

## Identification

4-digit number to identify the outer dimensions and 2 to 3-digit number (or inch identification) to state the bore size.

## Amount and Version of Screws

To size 3030 two stud screws with internal hexagon. From size 3525 three cylindrical screws with hexagon head.

## Requirements Regarding the Driving Element

The component that is to be mounted must have the matching bush adapter (in Taper version). Using Taper versions makes sense in serial production. For one-off production the use of cylindrical clamping bushes is more economical. These are available in many different versions.

## Available Driving Elements

There are various sprockets, pulleys and couplings with Taper adapter available from stock.

## Requirements Regarding the Shaft

Cylindrical shaft with a diameter tolerance of +0.05mm / -0.125 mm. The best results are achieved with ISO-tolerance h6. Up to a shaft diameter of 100mm cost-effective drawn shafts with tolerance h9 may also be used.

## Application with and without Parallel Key

Due to the high clamping force a parallel key is not necessarily required for medium torques (e.g. with pulleys). If the shaft has a keyway, and no parallel key is used, the keyways of shaft and bush should be mounted with an offset of 180 degrees. For highest torques a shaft with keyway and parallel key DIN 6885/1 must be used (the following sizes require a flat parallel key DIN 6885/3: 1008-24, 1008-25, 1108-28, 1210-32, 1215-32, 1310-35, 1610-42, 1615-42, 2517-65).

## Mounting

- Clean and degrease all contact surfaces.
- Set the clamping bush into the hub making sure that all bores align. One threaded bore must always align with one of the smooth half-bores of the counterpart
- Lubricate the mounting screws and loosely screw in the threads of the component to be mounted.
- Put the parallel key into the shaft (if a parallel key is used).
- Push the component to be mounted onto the shaft, together with the entered bush With feather key: Align the keyway with the parallel key. Without Feather key: Make sure the keyway of the bush is offset by 180 degrees to the shaft keyway, if there is one.
- If necessary use light blows to drive the bush into position.
- Fasten the mounting screws evenly, until the max. torque is reached (see table).
- Improving the fit of the bush: drive the bush further into the component to be mounted with light blows (using a wooden block or a soft metal bush).
- Retighten the mounting screws with the maximum torque (see table). Alternatively the bush can also be retightened after an operating time of 30 to 60 minutes.
- Fill the empty holes (used for forcing off) with grease, to protect them against contamination (depending on the size there are one or two forcing threads).

## Demounting

- Loosen screws and screw them out completely.
- Turn screws into the threaded bores of the bush (forcing thread). Depending on the size there are one or two forcing threads.
- Fasten the screws until the driving element disengages from the bush.
- Take driving element and bush off the shaft.
  If necessary, the bush can be forced apart using a screwdriver. (drive screwdriver carefully into the slot provided).

| Bush Nr. | Spanner Size mm | Screws Amount | Thread Size Inch | Fastening Torque Nm |
|---|---|---|---|---|
| **1008** | 3 | 2 | 1/4“ | 5,6 |
| **1108** | 3 | 2 | 1/4“ | 5,6 |
| **1210** | 5 | 2 | 3/8“ | 20 |
| **1215** | 5 | 2 | 3/8“ | 20 |
| **1610** | 5 | 2 | 3/8“ | 20 |
| **1615** | 5 | 2 | 3/8“ | 20 |
| **2012** | 6 | 2 | 7/16“ | 30 |
| **2017** | 6 | 2 | 7/16“ | 30 |
| **2517** | 6 | 2 | 1/2“ | 50 |
| **2525** | 6 | 2 | 1/2“ | 50 |
| **3020** | 8 | 2 | 5/8“ | 90 |
| **3030** | 8 | 2 | 5/8“ | 90 |
| **3525** | 10 | 3 | 1/2“ | 90 |
| **3535** | 10 | 3 | 1/2“ | 90 |

# Rolling bearings at MÄDLER®:

Ball bearings, open

Ball bearings, 2Z

Ball bearings, 2RS

**The premium brand**
- for the sophisiticated application

**The reliable brand**
- the inexpensive option

Angular contact ball bearings

Self aligning ball bearings

Cylindrical roller bearings

Spherical roller bearings

Tapered roller bearings

## *The rolling bearings are to find:*

- *in this catalog page 416*
- *on the internet at www.maedler.de*

# Please use our website

# at www.maedler.de

**Put in a search word or part number and go directly to the product page**

**Find the PDF-catalogue page and further information**

**Manual instructions, certificates, safety data sheets in the section Downloads**

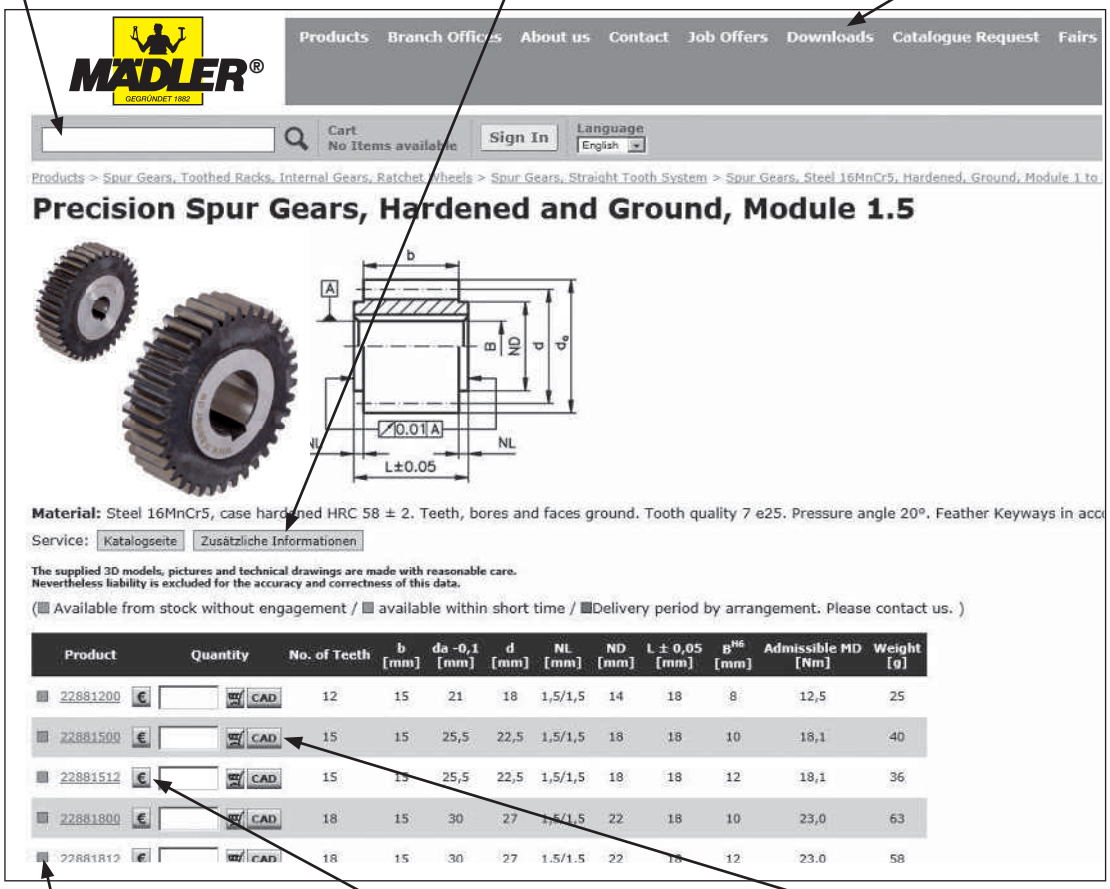


**The availability of all products is shown by coloured sign**

**Drag the mouse onto the currency-symbol to see the prices***

**Download CAD-drawings in 3D**

## A lot of possibilities and information:

- **Download of PDF catalogues in different languages.**
- **See all our branches and distributors.**
- **Make easily your order online and follow your parcel.**
- ***MÄDLER*®-Tools: Use our selection- and calculation tools.**
- **News: Useful information about exhibitions and others.**
- **Newsletter: Monthly information per e-mail.**

* Prices and terms of delivery depend on the country.

# www.maedler.de

## ...the entire MÄDLER® range with CAD files on the Internet

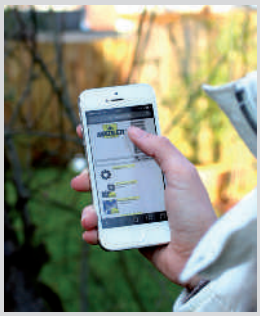

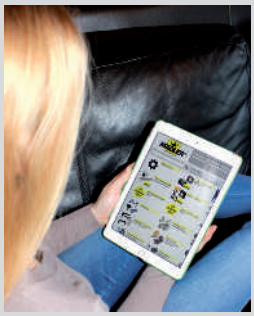

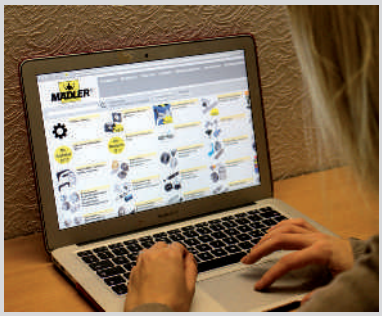

We present the entire ***MÄDLER***® range with CAD files and ***MÄDLER***® info, continuously updated, on the internet. Fast access to the data, fast ordering by internet.
Orders by internet, phone, fax or e-mail: We guarantee delivery at short notice.

Dimensions and other information in this catalogue display the current state of technology. We reserve the right for changes.
This catalogue was created with due diligence, but errors might still occur. We refuse to accept any claims in this respect. We reserve the right to alter dimensions, and to change or remove single products and product groups without prior notice. Our general conditions of sales, delivery and payment can be found on the last page of this catalogue.

## ...we keep things moving

**A**

***ACCURIDE*® Slides / Overview** ... **769**
Aerosols (Maintenance Sprays) ... 815
Actuator Systems ... 758
Adjustable Clamp Nuts ... 555
Adjustable Clamping Levers ... 550
Adjusting Rings ... 452
Air Preparation Equipment ... 634
Aluminium Spray ... 751
Angle Joints ... 430
Angular Drives (Plastic Bevel gears on Plate) ... 607
Anti-Vibration Elements ... 600
Arch Handles ... 560
Articulated Feet ... 597
Assembly Plug for Ball Cups ... 508
Assortment Boxes ... 576

**B**

Ball Bearings ... 436
Ball Flange Bearings ... 427
Ball Head Precision Adjusters ... 594
Ball Joints ... 405, 413
Ball Knobs ... 545
Ball Pillow Block Bearings ... 426
Ballscrew Spindle Drives ... 317
Ball Valves (manual) ... 644
Ball-Ended Thrust Screws ... 524
Bar Material Sintered Bronze ... 446
Bellows ... 415, 764
**Bevel Gearboxes / Overview** ... **654**
**Bevel Gears / Overview** ... **267**
Blow Guns ... 649
Bolts for T-Slots ... 518
Bolts with Cotter Pin Hole DIN 1434 Assortment Box ... 576
Bonding Products Loctite® ... 812
Bore-Reducing Bushes ... 407
Box Couplings ... 367
Bracket Hinge Mountings for Pneumatic Cylinders ... 622
Bushes ... 445

**C**

Cabinet "U" Handles ... 558
Cam-Action Indexing Plunger ... 532
Cap Bearings ... 420
Capacitors ... 722
**Cardan Joints / Overview** ... **403**
Chain Breakers for Roller Chains ... 58
Chain Couplings ... 384
Chain Lubricating Spray ... 815
Chain Puller for Roller Chains ... 58
Chain Riders ... 116
Chain Tensioners ... 111
Chain Tensioning Wheels with Bearing ... 109, 115
Chains (Roller Chains) ... 35
Chains (Round-Link Steel Chains DIN 766A) ... 119
Clamp Collars for Round Shafts (Slotted and Two-Part) ... 454
Clamp Collars for Splined Shafts ... 329
Clamp Collars for Threaded Bars ... 457
Clamp Mounts for Shock Absorbers ... 611
Clamp Nuts ... 555
Clamping Bolts for Quick Clamp® ... 573
**Clamping Bushes / Overview** ... **330**
Clamping Levers ... 550
**Clamping Sets / Overview** ... **330**
Clevis Joints ... 472
Clevises for Pneumatic Cylinders ... 623
Clevises ... 472
Compact Cylinders ... 616
Compressed Air Filters ... 635
Conical Seats DIN 6319 ... 523
Connecting Links for Roller Chains ... 37
Connecting Links for Round-Link Steel Chains ... 119
Connecting Shafts ... 766
Continuously Variable Geared Motors MUN/I ... 753
Control Knobs ... 537
Control Levers ... 557
Control Units (Motor controllers) ... 696
Corrosion Protection Spray ... 815
**Couplings / Overview** ... **364**
Cranks ... 563
Cup Rollers ... 508
Cylinders (Pneumatic) ... 615, 616, 618
Cylindrical Bushes ... 447
Cylindrical Handles ... 547
Cylindrical Roller Bearings ... 441

**D**

Disconnection Tool (for pneumatic tubes) ... 647
Drill Bushes ... 451
Drip-Feed Oilers ... 583
Driven Idlers, (Travel wheel systems) ... 124

**E**

Eccentric Clamping Levers ... 554
Edge Trims ... 580
**Electric Motors / Overview** ... **655**
Electronic Drip Feed Oiler ... 584
ES-Bolts for Clevises ... 473
Exhaust Filters (Pneumatic) ... 645
Extension Nuts ... 512
**Extension slides / Overview** ... **769**

**F**

Fast Connectors (Pneumatic Fittings) ... 638
Feather Keys Assortment Box ... 577
Feather Keys ... 578
Filter / Regulators (Pneumatic) ... 636
Fixing Plates for Timing Belts ... 171
Flange Bearings ... 422
Flange Nuts Trapezoidal Thread ... 314, 316
Flange Shaft Blocks ... 476
Flanged Drill Bushes ... 451
Flanges for Timing Belt Pulleys ... 170
Flat Gearboxes ... 662
Folding Handles ... 561
Foot Plate Mountings for Pneumatic Cylinders ... 620, 625
Frequency Converters ... 698
Front Flanges for Pneumatic Cylinders ... 620, 626

**G**

Gear Lever Handles ... 546
**Gear Racks / Overview** ... **255**
**Gearboxes, Geared Motors / Overview** ... **654**
Geared Motors RBM/I for Travel-Wheel System ... 126
**Gears / Overview** ... **194**
General Basics for Bevel Gears ... 268
General Basics for Roller Chains ... 35
General Basics for Spur Gears ... 196
General Basics for Timing Belt Drives ... 129
General Basics for Trapezoidal-Thread Spindles ... 305
General Basics for Universal Joints ... 373 - 374
General Basics for Worm Gears ... 294
General Technical Notes ... 816
Grips ... 538
Grub Screws DIN 6332 with Thrust Point ... 595
Guide Rails for Roller Chains ... 57

**H**
Hand Cranks ... 563
Hand Wheels ... 565
Handles ... 547
Hasp Wheels ... 121
Heavy-Duty Bushes PHO ... 606
Helical Gear Boxes BT/I ... 657
**Helical Geared Motors / Overview ... 655**
Hexagonal Nuts, Metric Thread ... 511
Hollow Worms ... 287
Hook Spanners DIN 1810 Form A ... 517
Horizontal Clamps ... 574
Hose Coils ... 650
Hose Tailpieces ... 650

**I**
Idlers ... 109, 122
Igus® / igubal® ... 418, 461
**Illustration index ... 9**
**Imprint ... 833**
Indexing Plungers ... 532
Instant Adhesives Loctite® ... 813
Internal gears ... 249

**J**
Jacks (Actuators) ... 758

**K**
Key Steel ... 578
KL-Retainers Assortment Box ... 576
Knurled Knobs and Screws ... 543
Knurled Nuts and Screws ... 519

**L**
Latch Clamps ... 572
Levelling Feets ... 598
Levelling Pads ... 596
Lifting Pins ... 571
Limit Switch (Motor Emergency Stop) ... 398
**Linear Bearings and Units / Overview ... 476**
Linear Drives (lifting devices) ... 758
Linear Slide Bearings ... 492
**Linear Technology / Overview ... 476**
**Locking Assemblies / Locking Devices / Overview ... 330**
Locknuts ... 515
Lockwashers ... 515
Loctite® ... 811
Lubricators Perma® ... 582

**M**
Machine Mounts ... 599
Magnetic Switches for Pneumatic Cylinders ... 627
**Maintenance Instructions ... 823**
Manifold ... 642
Membrane Couplings ... 379
Metal Bellow Couplings ... 377
Metal-Rubber-Buffers ... 600
Micro-Fog Oilers ... 636
Miniature Ball Screw Spindle Drives ... 321
Miniature Profile-Rail Guides ... 505
Miniature Shock Absorbers ... 610
Miniature Slide Units ... 506
Motor Controllers ... 697
Motor Emergency Stop (Limit Switch) ... 398
Motor-Tensioning Rail Sets SPS ... 695
Mounting Blocks for Shock Absorbers ... 611
Mounting Elements for Magnetic Switches ... 625
Mounting Elements Quikclamp ... 637
**Mounting Options For Driving Wheels ... 817**
Multi-Function Spray WD-40® ... 815

**N**
Non-Return Valves ... 647
Nuts / Bolts for T-Slots ... 518
Nuts, Metric Thread ... 511
Nuts, Trapezoidal Thread ... 313

**O**
Oiler ... 582
Oil-Level Sight Glasses ... 585
Operating Capacitors ... 722
**Operation and Maintenance Instructions ... 823**

**P**
Palm Grips ... 538
Parallel Keys Assortment Box ... 577
Parallel Keys ... 578
Pillow Block Bearing ... 420, 426
Plain Bearing Bushes ... 445
Planetary Small Geared Motors PE ... 709
Pneufit® Quick Connectors ... 638
**Pneumatic Elements / Overview ... 613**
Polyamide Tubes ... 648
Polyurethane Hoses ... 648
Precision Adjusters ... 588
**Precision Housings for Linear Bearings / Overview ... 476**
Precision Levelling Adjusters ... 588
Precision Rail-Guide Sets ... 504
Precision Worm Gear Sets ... 295
Pressure Gauges ... 637
Pressure Regulators ... 635
Pressure Relief Valves ... 636
Profile Dampers ... 607
Profile Rail Guides ... 505
Profiled Track Rollers and Bolts ... 502
PTFE Spray ... 815

**Q**
Quadro Linear Bearing Units ... 476
**Quality Management Certificate ... 34**
Quick Clamps ... 573
Quick Exhaust Valves ... 646

**R**
Radial Shaft Seals ... 443
Rail-Guide Sets ... 504
Ratchet Braces and Ratchet Wheels ... 250
Raw Material Sintered Bronze ... 446
Ready to Install Actuator Systems ... 758
Rear Clevis Mountings for Pneumatic Cylinders ... 621
Rear Eye Mountings ... 562 - 563
Rear Flanges for Pneumatic Cylinders ... 620
Rectangular Flanges for Shock Absorbers ... 611
Retaining Rings DIN 471 / DIN 472 ... 514
Retractable Handles ... 547
Revolving Ball Knobs ... 546
Reworking of Spindles ... 325, 435
Rigid Couplings ... 367
ROBA® Sliding Hubs ... 402
**Rod Ends / Overview ... 458**
Rod Ends for Pneumatic Cylinders ... 624
**Roller Bearings / Overview ... 416**
**Roller Chains / Description ... 35**
Roller Chains with Bent Attachments ... 50
Roller chains with Straight Attachments ... 46
Roller Chains ... 37

Round Gear Racks ... 262
Round-Line Cylinders ... 618
Round-Link Steel Chains DIN 766 A ... 119
Rubber-Metal Bump Stops ... 600

S
Screw Jacks ... 758
Sealants and Sealant Removers Loctite® ... 814
Seals for Ball Bearings and Shafts ... 443
Set Collars ... 452
Sealing Caps for Angle Joints ... 475
Shaft Blocks ... 476
Shaft Collars ... 452
Shaft Nuts ... 515
Shaft Steel with Shaft Support ... 481
Shaft Steel ... 478
Shaft-Mounted Flat Gearboxes BOC/I ... 662
**Shaft to Hub Connections / Overview ... 330**
Shock Absorbers (Hydraulic Dampers) ... 610
Shrink Disks ... 356
Shut-off Valve (manual) ... 637
Silencers (pneumatic) ... 640, 645
Silver Steel ... 477
Single Row Roller Bearings ... 436
Sintered Bronze Blanks for Plain Bearings ... 446
Sintered Bronze Bushes ... 445
**SKF® Rollerbearings / Overview ... 416**
**Sliding Hubs / Overview ... 365**
Slip Clutches ... 394
Slotted Nuts ... 515
SL-Retainers Assortment Box ... 576
**Small Geared Motors / Overview ... 655**
**Small Worm Geared Motors / Overview ... 655**
Socket for Solenoid Valves ... 633
Socket Pins with Spring-Loaded Balls ... 571
Solenoid Shut-Off Valve (manual) ... 637
Solenoid Valves ... 629
Spacers for Precision Levelling Adjusters ... 594
SPANNBOX® / SPANNBOY® ... 111
Spare Chain Link for Round-Link Steel Chains DIN 766 A ... 119
Spare Solenoids for Solenoid Valves ... 633
Speed Controllers for DC drives ... 696
Spherical Bearings DIN 12240-1 (DIN 648) ... 469
Spherical Roller Bearings ... 441
Spherical Washers DIN 6319 ... 523
Spiders for Elastic Couplings ... 391
Spindles, Ball Drives ... 317
**Spindles, Trapezoidal Threads / Overview ... 305**
Splined Hubs ... 328
Splined Shafts for Timing Belts ... 166
Splined Shafts ... 327
Sprays (Aerosols) ... 815
Spring Plungers ... 524
**Sprockets for Roller Chains / Overview ... 60**
Sprockets for Round-Link Steel Chains ... 121
Spur Gear Shafts ... 247
**Spur Gears / Overview ... 194**
Stainless Steel Spray ... 815
Standard and Safety Quick-Release Couplings ... 651
Standard Cylinders (Pneumatic) ... 615
Standard Fog Oiler ... 636
Standard Motors (Three-Phase) ... 692
**Standard Parts for Operating / Overview ... 529**
Star Grips and Star Grip Screws ... 538
Stauffer Grease Boxes ... 586
Support Units for Spindle Drives ... 322, 432
Swing Bolts ... 522

T
Tandem Linear Bearing Units ... 476
Taper Bushes - Instructions ... 824
Taper Bushes ... 360
Tapered Rollerbearings ... 442
**Telescopic Slides / Overview ... 769**
Telescopic Universal-Joint Shafts ... 407, 413
Tensioning Elements for Chains ... 116
Tensioning Elements for Belts ... 182, 191
Tensioning Rollers for Timing Belt Drives ... 182
**The Company ... 27**
Thread Locking Products Loctite® ... 811
Threaded Bars, Metric (DIN 975 / DIN 976) ... 510
Threaded Spindles and Nuts, Trapezoidal Threads ... 305
Throttle-Type Non-Return Valves ... 646
Thrust Pads ... 595
Thrust Screws ... 524
**Timing-Belt Drives / Overview ... 128**
Tolerance Rings for Cup Rollers ... 509
Toothed Couplings ... 380
**Trapezoidal Thread Spindles and Nuts / Overview ... 305**
Travel Wheel Systems RB/I ... 124
Triangular Knobs and Screws ... 484
Tri-Ball Handles ... 542
Tube Cutters ... 589
Tubular Handles ... 647
Turnbuckle Nuts ... 513
Turret Levers ... 564

U
**Universal Joints / Overview ... 403**
Universal Joint Shafts ... 407, 413

V
Variable Geared Motors MUN/I ... 753
V-Belt Pulleys for Taper Bushes ... 183
V-Belt Pulleys Made From Light Alloy ... 188
V-Belt Tensioners ... 191
V-Belts ... 192
Vertical Clamps ... 573

W
Washers and Pins Assortment Box ... 577
Washers DIN 6340 ... 513
WD-40® (Multi-Function Spray) ... 815
Welding Hubs for Taper Bushes ... 362
Wing Nuts and Screws ... 544
Worm Gear Screw Jacks NP/I ... 761
**Worm Gear Boxes / Overview ... 654**
**Worm Geared Motors / Overview ... 655**
**Worm Helical Geared Motors / Overview ... 655**
**Worms and Worm Gears/ Overview ... 284**

Z
Zinc Repair Spray ... 815

## Imprint

**Publisher:** MÄDLER GmbH Tränkestr. 6-8 D-70597 Stuttgart Tel. +49 711 720950 Fax +49 711 7209533 e-mail stuttgart@maedler.de
Managing directors: Mrs. Karin Mädler, Mr. Steffen Krotz.
Catalog creation and technical documentation: Mr. Dipl.-Ing. Knut Schmidt (head), Mrs. Dipl.-Oec. Birgit Iodice, Mr. Sascha Rodigast.
The original language is German. Print mistakes, errors and translation mistakes might occur.
The reprint of our catalogs or use of our texts, photos or drawings requires the explicit writtten approval of MÄDLER GmbH in Stuttgart.

MÄDLER® and MÄDLER® are registered and protected trademarks in many countries.

# Terms and Conditions of *MÄDLER®* GmbH

**§ 1 General information – Area of application**
Our conditions of sale shall apply exclusively; conflicting or deviating terms and conditions of the buyer are not binding for us unless expressly agreed to their validity in writing. Our conditions of sale shall also apply where we perform delivery to the buyer without reservation in spite of knowledge of conditions of the supplier which conflict with or differ from our conditions of sale. Any agreements made between us and the buyer for the purpose of execution of this contract are contained in writing in this contract. Our sales conditions apply only to entrepreneurs as defined by § 310 paragraph 1 German Civil Code (BGB).

**§ 2 Quotation – Quotation documents**
If the order is to qualify as an offer in accordance with § 145 BGB, we shall have 2 weeks in which to accept it. We reserve ownership and copyright on illustrations, drawings, calculations and other documents. This applies equally to documents defined as "confidential". Passing them on to third parties shall be subject to our explicit written consent. All information provided in catalogues, drawings and models regarding performance, load capacity, dimensions and weights are approximate values. As part of ongoing technical development, we reserve the right to make dimensional and constructional alterations. Upon request and at the buyer's cost we provide a technical test certificate. Reproduction of our catalogues and drawings as wells as copies of our models, even in part, requires our explicit approval in writing. Our offers are non-binding. Orders are only binding if confirmed by us or if fulfilled by sending of the goods.

**§ 3 Pricing – Terms of payment**
Retail customers and customers outside Germany will only be supplied on a cash before delivery basis. In the absence of any written agreements to the contrary, our prices for deliveries within Germany include free carriage and packaging; excluded are special freight and deliveries to foreign countries. Statutory VAT is not included in our prices; the applicable legal rate is stated in a separate invoice at the date of the invoice. Unless firm pricing has been explicitly agreed for a certain delivery, prices will be calculated according to our price lists valid at the time of the purchase, which also provide terms and conditions for small orders, call orders, price surcharges and return deliveries. These price lists in their currently valid form are the subject matter of conditions of sale, delivery and payment. Dispatch is carried out cash on delivery unless explicitly agreed otherwise. If delivery is not made cash on delivery, our invoices are to be settled within 30 days without any deduction. If the invoiced amount is paid within 14 days from date of invoice, the buyer is entitled to deduct a 2% discount. Discount deductions, however, shall only be permitted on condition that the buyer has settled all outstanding invoices with us or is settling them at the same time. Payment conditions for deliveries starting from EUR 1.500,00 for goods made up to specifications or samples are 50% upon receipt of confirmation of order and 50%, without deduction, within 30 days of invoice date. Partial deliveries are invoiced immediately. We shall be entitled to demand default interest amounting to 8 percentage points above the base rate, if periods of payment are exceeded. The seller reserves the right to claim damages for the enforcement of a further delay. Payment terms shall only be deemed met, if the amount payable is available to us within the delays.
Bills of exchange are accepted only upon special previous agreement. Bills of exchange and cheques are accepted only on account of performance. Where there is major deterioration in the financial circumstances of the ordering party, we are entitled to refuse to carry out further deliveries until all receivables, due or not due, are settled or a warranty is provided. Only undisputed claims or those determined with legal validity shall entitle the buyer to offset claims or retain payments. Retentions of payments must be based on the same contractual relationship as the respective accounts receivables.

**§ 4 Delivery times**
Deadlines and dates for deliveries are only approximate. In case of a culpable failure to keep the delivery date, there will only be a default in delivery after an extended period has been set provided the underlying purchasing contract has not been expressly agreed on as a fixed date transaction, as defined in § 286 paragraph 2 No. 4 BGB or § 376 German Commercial Code (HGB). The commencement of the delivery period specified by us depends on prior clarification of all technical questions. Fulfillment of our delivery conditions is subject to prompt and proper fulfillment of the buyer's obligations. We reserve the defense of non-performance of the contract.
If the purchaser delays acceptance or if it culpably infringes other duties of cooperation, we shall be entitled to ask for compensation, including any additional expenditure. Any further legal claims shall remain unaffected. If the conditions of paragraph (3) are met, the risk of accidental loss or of accidental degradation of the item purchased shall transfer to the ordering party when the same party defaults on debts or in acceptance. We are liable within the legal provisions to the extent that the underlying purchasing contract is a fixed date transaction as defined in § 286 paragraph 2 No. 4 BGB or § 376 German Commercial Code (HGB). We are also liable pursuant to the statutory provisions to the extent that, as a consequence of a delay in delivery that is our responsibility, the customer has the right to claim cessation of his interest in continuing the performance of the contract. Moreover, we shall be liable in accordance with statutory provisions in so far as the delay in delivery is based upon an intentional or grossly negligent contract violation for which we are responsible; we shall also be responsible for a fault caused by our representatives or vicarious agents. Insofar as the delay in delivery is not the result of an intentional breach of contract for which we are responsible, our liability for compensation is limited to the foreseeable damage that may typically occur.

We shall bear legal liability under statutory regulations if the delay in delivery for which we are responsible has been caused by the culpable violation of an essential contractual obligation; in such case, however, our liability for damages shall be limited to the foreseeable typically occurring damage. The buyer shall reserve the right to additional statutory claims and rights.

**§ 5 Transport Insurance, Packaging and Costs**
Provided that nothing else is stated in the order confirmation, delivery shall be considered as agreed. Deliveries within the Federal Republic of Germany are free kerbstone edge and covered by our transport insurance. Everything else requires a special agreement. If the place of delivery is within the German Federal Republic, we shall bear the cost of loading and dispatch; otherwise, the ordering party is liable for the costs. Generally, shipments outside the German Federal Republic shall be transported at the expense and risk of the purchaser and we shall select a suitable carrier or transport company. Transport packaging and all other packaging in accordance with the German Packaging Ordinance is non-returnable and becomes the Customer's property, except for pallets. The customer is obliged to dispose of the packaging material at his own expense.

**§ 6 Liability for defects**
All information about suitability, workmanship and application of our products, technical advice and other details are given to the best of our knowledge but do not release the customer from the obligation to perform his own examinations and tests. Claims for defects by the customer require proper fulfillment of its obligations to inspect and complain in accordance with § 377 HGB. In the case of custom-built products we are allowed to make overdeliveries or underdeliveries of up to 10% of the ordered quantity.

Provided there is a defect on the merchandise, the customer is entitled to choose between rectification of the defect or having the merchandise delivered free of defects. In case of remedying a defect we are to bear all costs which are necessary for remedying the defect, especially transport, travel, work, and material costs insofar as these costs are not increased by moving the delivery to a place other than the place of performance. If subsequent performance fails, the buyer will be entitled to choose to demand cancellation or reduction. We are liable within the legal provisions, as far as the customer asserts a claim on compensation which is based on intention or gross negligence of us, including intent or gross negligence on the part of representatives or vicarious agents.

As far as we are not accused of willful breach of contract, our liability for claims for damages is limited to the foreseeable, typically occurring damage. We shall be liable pursuant to the statutory provisions, insofar as we culpably violate an essential contractual obligation; however, in this case liability is restricted to foreseeable, typically occurring damage. Liability on account of culpable injury to life, limb or health shall not be affected; this shall also apply to mandatory liability as provided for in the product liability law. Liability shall be excluded in instances not covered in the above provisions. The statutory limit for claims in respect of a defect is 12 months, beginning with the transfer of risk. The statute of limitations in the event of a delivery recourse according to §§ 478, 479 BGB remain unaffected; it is five years, beginning from delivery of the faulty object.

**§ 7 Total liability**
We specifically exclude any additional form of liability, beyond that specified in §6, independent of the legal nature of the issue. This applies in particular to claims for damages resulting from fault in conclusion of contract, from other breaches of duty or from tortious claims for compensation for property damage according to § 823 BGB. As far as the liability for compensation against us is excluded or restricted, this shall be valid as well with respect to the personal liability for compensations of our employees, staff members, representatives and vicarious agents.

**§ 8 Security of reservation of title**
We retain the title of ordered goods until all due payments have been provided as stated in the contract (including the settlement of all outstanding current account balances). If the customer acts in a way contrary to the contractual obligations, in particular in the event of a default in payment, we shall be entitled to retrieve the goods. Our taking back of the delivery item in no way constitutes withdrawal from the contract, unless this was previously explicitly agreed in writing.

A seizure of the delivered goods shall always constitute a withdrawal from the contract. After recovery of the purchased object we are entitled to sell the latter, the amount thus realized is to be deducted from the obligations of the ordering party - less reasonable exploitation costs. The customer is obliged to handle the purchased goods with care and, in particular, the customer shall, at its own expense, sufficiently insure such goods, at their original price, against fire, water and theft damage. If maintenance and inspection work is necessary, the contracting party must conduct such work in due time at its own cost. In the event of seizures or other action by third parties, the customer must notify us immediately in writing so that we can lodge a lawsuit in accordance with § 771 German Code of Civil Procedure (ZPO).
Unless third parties are incapable of reimbursing us judicial and extrajudicial costs for an action as per § 771 ZPO, the customer shall be liable for any expenses defrayed by our company. The buyer is entitled to resell the purchased item in the ordinary course of business; however, he herewith already assigns to us all claims to the amount of the invoice sum total (including value-added tax) arising from the further assignment to its clients or to a third party, and this independently of whether or not the purchase object has been sold on without or after further processing.

The buyer remains entitled to collect this receivable even after the assignation. Our right to collect such claims remains unaffected.
However, we undertake not to collect the claim as long as the client fulfills his payment obligations arising from the collected profits, is not in default of payment and particularly if no application for the institution of bankruptcy or composition or insolvency proceedings is filed and no insolvency has occurred.
However, if this is the case we can request that the buyer informs us of the assigned claims and their debtors, provides all pertaining information and relevant documents which are necessary for us to assert our rights, and that he informs the debtors (third parties) about the assignment. The processing or modification of the purchased item by the customer will always be carried out on our behalf.

If the ordered item is processed with other objects not belonging to us, we acquire the joint ownership of the new resulting item in the ratio of the value of the object bought (final invoiced amount including value-added tax) to the other processed objects at the time of processing. Apart from this the same shall apply for the item resulting through processing as for the item delivered under reserve. If the object of sale is indivisibly mixed with other objects not belonging to us, we shall acquire co-ownership of the new object created in the ratio of the value of the delivered item (final invoice value including value-added tax) to the other mixed objects at the time of mixing.
If mixing occurs in such a way that the contractor's item is to be regarded as the principal item, it is deemed to have been agreed that the contractor transfers proportionate co-ownership to us. The purchaser keeps the herewith generated sole ownership or co-ownership for us.

As a security for our own claim, the customer also assigns to us the claims arising against a third party by integration of the ordered goods into real property. At the request of the customer, we undertake to release the securities to which we are entitled insofar as the realisable value of our securities exceeds the claims to be secured by more than 10%, the choice of the securities to be released is within our scope of responsibility.

**§ 9 Provision of Materials and Samples**
If the tool breaks as a result of bad prior work or defective material on the parts to be processed, relevant cost shall be borne by the customer. If work pieces provided by the customer become unusable as a result of mistakes in workmanship, with the exception of intent and gross negligence, we shall assume responsibility only for work carried out by our company. A guarantee is granted by way of subsequent improvement in such way that we carry out the same processing again, at no charge, when new work pieces are delivered to us. Our liability – with the exception of intent and gross negligence – is limited to the invoiced wage costs.

Prior to leaving our premises, the processed parts are subjected to a random inspection. Additional examination takes place only upon special agreement or against calculation of extra costs. This output check does not release the customer (recipient of goods) from his own duty to carry out an incoming goods check. We do not accept responsibility for any samples sent to us.

**§ 10 Jurisdiction – Place of fulfillment**
Provided the buyer is a merchant, jurisdiction shall be our place of business; we are, however, entitled to sue the buyer at the court of his residence.
The law of the Federal Republic of Germany shall apply with the exception of UN international trade law.
Unless otherwise provided in the confirmation of order, place of fulfillment is the place of our business.

**Status October 2012, MÄDLER GmbH**

# Custom-made Products

The modern production machinery and our team of specialised; skilled workers serve as a basis for another main part of our production: Custom-made products according to drawings or your specifications, from one-off production up to large series, at a good price and with short delivery times- with perfect quality control, and flexible as today's market demands.

Gears from module 0.3 to module 8, Gear racks from module 0.3 to module 16, bevel gears from module 0.5 to module 8, worm gears and worms from module 0.3 to module 6, trapezoidal thread from 10 x 3 mm to
70 x 10 mm single and double thread,
including all matching trapezoidal thread nuts.
Splined hubs and clamp collars for splined hub profiles 11 x 14 to 46 x 54.

# In-house Production

The ***MÄDLER®*** group produces its parts in Germany at two manufacturing sites: Stuttgart and Hamburg. There specialised workers produce our own ***MÄDLER®***-product range on the most modern CNC machinery.

One-off production according to drawings or samples up to larger series, with a perfect quality control, flexible as today's market demands.

The most important prerequisite is a highly qualified and cost-effective production and a guarantee for the shortest delivery times for all parts listed in the yellow ***MÄDLER®*** catalogues and the Internet.

Another manufacturing site is in China.
This joint-venture enables simpliere mass parts due to German quality standards at low prices.

# Ballscrew Spindle Drives

***MÄDLER®*** can supply you with ballscrew spindle drives matching your special specifications.

More detailed information on page 317.

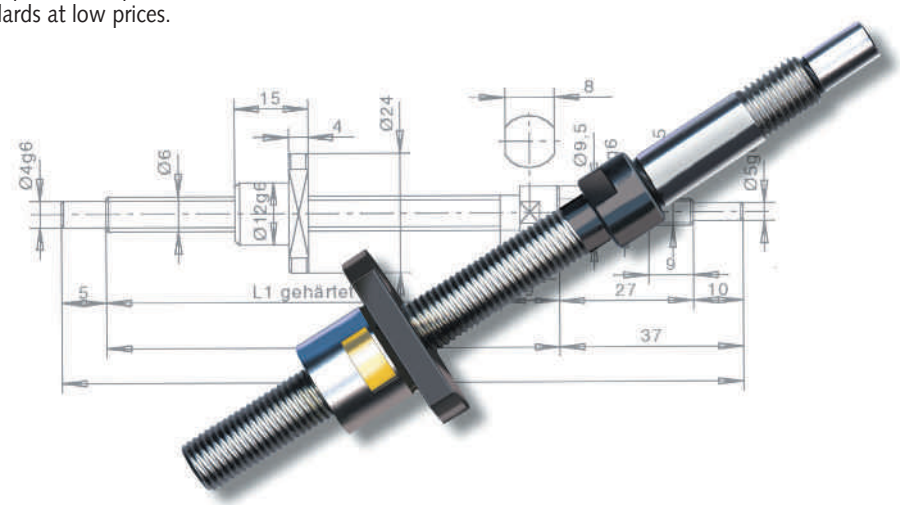


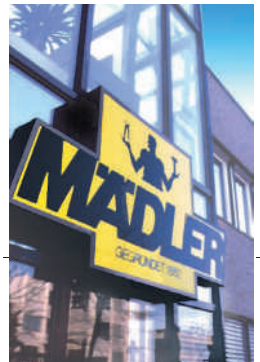


***we keep things moving***