2.4 Toggle clamps Power clamps Hook clamps

GN 810
Vertical clamps

→ Page 678

GN 810
Vertical clamps
Stainless Steel

→ Page 680

GN 810.1
Vertical clamps

→ Page 682

GN 810.1
Vertical clamps
Stainless Steel

→ Page 684

GN 910
Vertical clamps
heavy duty type
„Longlife“

→ Page 686

GN 910.1
Vertical clamps
heavy duty type
„Longlife“

→ Page 688

GN 910.2
Knee lever modules
to screw-on

→ Page 690

GN 910.3
Knee lever modules
for welding

→ Page 692

GN 910.5
Handles
for knee lever modules
Plastic

→ Page 693

GN 910.6
Lever arms
for knee lever modules

→ Page 693

GN 910.7
Clamping arm elongations
for knee lever modules

→ Page 693

GN 910.8
Bushes
for knee lever modules

→ Page 693

GN 910.9
Base plates
for knee lever modules

→ Page 693

GN 812
Vertical clamps
with angled base

→ Page 694

GN 812.1
Vertical clamps
with angled base

→ Page 696

GN 813
Vertical clamps
heavy duty type

→ Page 698

GN 820
Horizontal clamps

→ Page 700

GN 820
Horizontal clamps
Stainless Steel

→ Page 702

GN 820.1
Horizontal clamps

→ Page 704

GN 820.1
Horizontal clamps
Stainless Steel

→ Page 706

GN 820.2
Horizontal clamps

→ Page 708

Stainless Steel | Ergostyle | Softline | Cleanline | Sanline | ATEX | ESD | Inch

GN 820.2
Horizontal clamps
Stainless Steel

→ Page 710

GN 850
Hook clamps

→ Page 724

GN 852
Latch clamps
heavy duty type
for welding

→ Page 736

GN 840
Plunger clamps

→ Page 712

GN 851
Latch clamps

→ Page 726

GN 852
Latch clamps
heavy duty type
to screw-on
Stainless Steel

→ Page 738

GN 844
Plunger clamps

→ Page 714

GN 851
Latch clamps
Stainless Steel

→ Page 728

GN 852
Latch clamps
heavy duty type
for welding
Stainless Steel

→ Page 738

GN 841
Plunger clamps

→ Page 716

GN 851.1
Latch clamps

→ Page 730

GN 951.1
Pulling latches
for latch clamps
GN 851 / GN 851.1 /
GN 851.2
Steel

→ Page 740

GN 842
Plunger clamps

→ Page 718

GN 851.1
Latch clamps
Stainless Steel

→ Page 732

GN 951.1
Pulling latches
for latch clamps
GN 851 / GN 851.1 /
GN 851.2
Stainless Steel

→ Page 740

GN 843.1
Plunger clamps

→ Page 720

GN 851.2
Latch clamps

→ Page 734

GN 951.2
Pulling latches
for latch clamps
GN 852
Steel

→ Page 741

GN 843.1
Plunger clamps
Stainless Steel

→ Page 722

GN 852
Latch clamps
heavy duty type
to screw-on

→ Page 736

GN 951.2
Pulling latches
for latch clamps
GN 852
Stainless Steel

→ Page 741

Stainless Steel | Ergostyle | Softline | Cleanline | Sanline | ATEX | ESD | Inch

GN 852.1
Latch clamps
with locking mechanism

→ Page 742

GN 862
Pneumatically operated clamps

→ Page 756

GN 807
Clamping bolts
Stainless Steel

→ Page 765

GN 853
Latch clamps
with locking mechanism

→ Page 744

GN 862.1
Pneumatically operated clamps

→ Page 758

GN 708.1
Clamping bolts

→ Page 766

GN 853
Latch clamps
with locking mechanism
Stainless Steel

→ Page 746

GN 863
Pneumatically operated clamps
heavy duty type

→ Page 760

GN 708.1
Clamping bolts
Stainless Steel

→ Page 766

GN 854
Latch clamps
with trigger function

→ Page 748

GN 890
Pneumatically operated clamps

→ Page 762

GN 802
Clamping bolts

→ Page 767

GN 855
C-Clamps

→ Page 750

GN 896.1
GN 896.2
Proximity switches
with mounting bracket

→ Page 764

GN 903
Clamping bolts

→ Page 768

GN 860
Pneumatically operated clamps

→ Page 752

GN 896.3
Proximity switches

→ Page 764

GN 903
Clamping bolts
Stainless Steel

→ Page 768

GN 861
Pneumatically operated clamps
heavy tuty type

→ Page 754

GN 807
Clamping bolts

→ Page 765

GN 804
Clamping bolts
with adjustable spring loaded thrust pad

→ Page 769

Stainless Steel | Ergostyle | Softline | Cleanline | Sanline | ATEX | ESD | Inch

GN 809
Holders for clamping bolts
→ Page 770

GN 801
Holders for clamping bolts
→ Page 771

GN 864
Power clamps
→ Page 774

GN 865
Power clamps
→ Page 776

GN 866
Power clamps
→ Page 778

GN 866.1
Power clamps
→ Page 780

GN 867
Holders for clamping bolts
for power clamps
→ Page 782

GN 867.1
Static holders
for power clamps
→ Page 783

GN 868
Holders for clamping jaws
for power clamps
→ Page 784

GN 868.1
Holders for clamping jaws
for power clamps
→ Page 785

GN 869.1
Static holders
for power clamps
→ Page 786

GN 869.2
Holders for clamping jaws
for power clamps
→ Page 787

GN 872
Clamping jaws blank
for power clamps
→ Page 788

GN 871
Levelling shims
for power clamps
→ Page 789

GN 873
Collar clamps
for power clamps
→ Page 790

GN 870
Guide bushes
for power clamps
→ Page 792

GN 893.1
Proximity switches
for power clamps
→ Page 793

GN 893.2
GN 893.3
GN 893.4
Proximity switches
for power clamps
→ Page 793

GN 821
Hook clamps
→ Page 794

GN 821
Hook clamps
Stainless Steel
→ Page 794

GN 831
Hook clamps
→ Page 796

Stainless Steel | Ergostyle | Softline | Cleanline | Sanline | ATEX | ESD | Inch

GN 831
Hook clamps
Stainless Steel

→ *Page 796*

GN 833
Hook clamps
Steel,
Stainless Steel

→ *Page 805*

GN 831.1
Hook clamps
Steel,
Stainless Steel

→ *Page 798*

GN 832
Hook clamps
Steel,
Stainless Steel

→ *Page 799*

GN 832.1
Hook clamps
Steel,
Stainless Steel

→ *Page 800*

GN 832.2
Hook clamps
Steel,
Stainless Steel

→ *Page 802*

GN 832.3
Hook clamps
Steel,
Stainless Steel

→ *Page 803*

GN 832.4
Hook clamps
Steel,
Stainless Steel

→ *Page 804*

Stainless Steel | Ergostyle | Softline | Cleanline | Sanline | ATEX | ESD | Inch

Stainless Steel Ergostyle Softline Cleanline Sanline ATEX ESD Inch

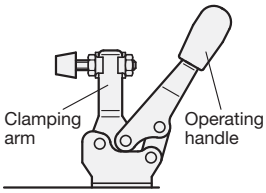

By using the **toggle link principle** these toggle clamps offer decisive advantages:

The clamping arm retracts to such an extent that the workpiece can be loaded and unloaded completely unobstructed.

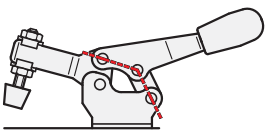

Even the slightest forward movement of the operating handle brings the clamping arm with the contact pad over the workpiece.

As can be seen from the sketch, the position of the toggle links will lead to a multiple of the input force applied to the operating handle.

In this position the Toggle clamp is not yet fully engaged and any counter force will open it.

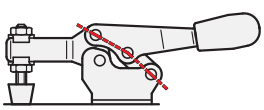

In this position all three pivots are perfectly aligned yielding the maximum **clamping force F_s** (dead centre point).

The clamping force F_s exerted on the workpiece is mainly dependent on the following criteria:

- the input force which is applied to the operating handle,
- the position of the clamping bolt on the clamping lever.

Since the applied force on the lever by the operator is not known, the clamping force Fs shown in the table is only specified for pneumatically operated clamps.

The clamping force F_s can be altered by re-adjusting the position of the clamping bolt. The clamping force increases if the entire contact area of the bolt arrives on the workpiece prior to the toggle linkage reaching dead centre point. This effect is illustrated clearly when using an elastic clamping pad

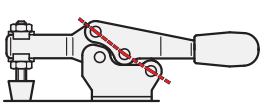

In this position the toggle linkage has arrived in the over-centre lock position and the operating lever has reached a firm stop and is thus prevented from opening until it is released by the operator.

The force which the clamp is capable of withstanding in this over-centre lock position without suffering permanent deformation is known as holding force F_H. The holding force has a characteristic value (co-efficient) for toggle clamps and this value is mainly dependent on:

- the size (dimensions, geometry) of the toggle clamp,
- the position of the clamping bolt on the clamping arm.

In the tables the **holding force F_H** of the toggle clamps is given in each case in relation to a particular position of the clamping arm.

All clamps are shown on the standards sheets in their clamping position.

All references to force are given in N (Newton) ≈ 0,1 kp.

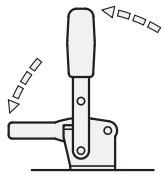

Vertical clamps
Operating handle and clamping lever move in the same direction.
In the clamping position the operating handle is in vertical position.
For applications where substantial forces and many tightening cycles occur, „Long Life“ versions are available.
Vertical clamps are available for holding forces F_H from 900 N to 30 000 N.

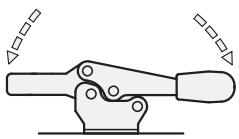

Horizontal clamps
Operating handle and clamping arm move in opposite direction.
In the clamped position the operating handle is in horizontal position (flat version).
Horizontal clamps are available for holding forces F_H from 400 N up to 6200 N.

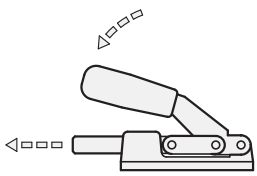

Plunger clamps
On these clamps the swinging movement of the operating handle is converted into an axial movement to push or pull the plunger.
With the exception of 2 versions (GN 841) they lock at the end of their stroke in both directions. For this reason they lend themselves for push or pull operations.
Push-pull clamps are available for holding forces F_H from 800 N up to 45 000 N.

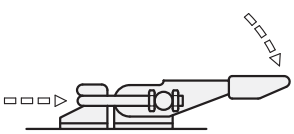

Latch clamps
On these clamps the swinging movement of the operating handle is converted into an axial movement to pull the hook.
Hook clamps are mainly used for closing of vents or lids on containers.
Hook clamps are available for holding forces F_H from 1600 N up to 28 000 N.

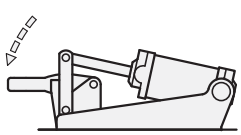

Pneumatically operated clamps
These toggle clamps combine the advantages of clamping by the toggle principle (clamp remains in the clamping position even in the event of air pressure loss!) with the advantages offered by pneumatics i.e.:

- constant clamping force Fs independent of the operator
- several clamps can be operated simultaneously (via a 4-way valve),
- Pneumatically operated clamps can be energised from various operating points (remote control, co-ordinated and controlled by other machines),
- some variants are available with an air cylinder which allows control via a proximity switch, to give an electrical impulse when the clamp has reached a specific position within its clamping cycle.

Pneumatically operated clamps are available as vertical and push rod version for clamping forces F_S from 500 N up to 6000 N (min. force at 4 bar) and holding forces from 700 N to 25 000 N.

Design templates
At **www.ganter-griff.com** we provide all toggle clamp product drawings in DXF format and all major **3D formats** for download.

Vertical clamps

with horizontal base

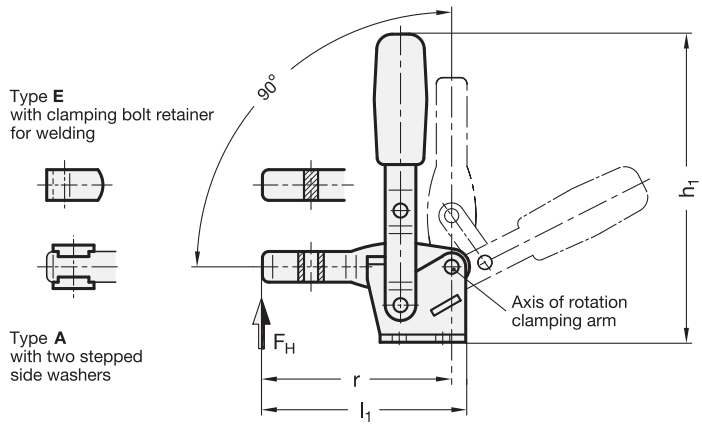

2 Type

A forked clamping arm
E solid clamping arm

1

Size	F_H in N Holding force	a ≈	b_1	b_2	b_3	d_1	d_2	h_1 ≈	h_2	h_3
70	900	20	29	34	5,5	M 5	4,5	97	19	11
125	1600	28	35	42	6,5	M 6	5,5	142	28	14
200	2200	40	43	45	8,5	M 8	6,5	162	32	18
300	2700	42	50	65	10,5	M 10	8,5	195	42	20
400	3000	66	52	65	13	M 12	8,5	230,5	48,5	22
500	4600	90	77	90	13	M 12	10,5	295,5	84	30

Size	h_4	l_1 ≈	l_2 ≈	l_3 max.	m_1	m_2	m_3	r ≈	s_1	s_2
70	22,5	67	38	48	15	24	7	62,5	2	4
125	27	86	51	62	19	29	8	79,5	2,5	5
200	35	111	70	86	20	32	11,5	104	3	6
300	41	130	76	95	29	46	10,5	122	3	8
400	49	163	104	130	32	45	10	156	6,5	10
500	57	224	144	168	50	70	13,5	212	7	10

Specification

- Parts in sheet metal
  Case hardening steel C10
  zinc plated, blue passivated
- Bearing pins tempered
- Bearing rivets (from size 200 upwards)
  case hardened
- all moving parts
  lubricated with special grease
- solid moulded plastic handle sleeve
  red, oil resistant
- RoHS compliant

Accessory

- Clamping bolts → *Page 765*
- Holders for clamping bolts GN 809
  (for type E) → *Page 770*
- Holders for clamping bolts GN 801
  (for type A) → *Page 771*

Information

Stepped side washers respectively clamping bolt retainers are included.

see also...
- *General information to toggle clamps → Page 676*
- *Stainless Steel-Vertical clamps GN 810 → Page 680*
- *Vertical clamps GN 910 („Longlife“) → Page 686*

How to order		
GN 810-70-E (1 = Size, 2 = Type)	1	Size
	2	Type

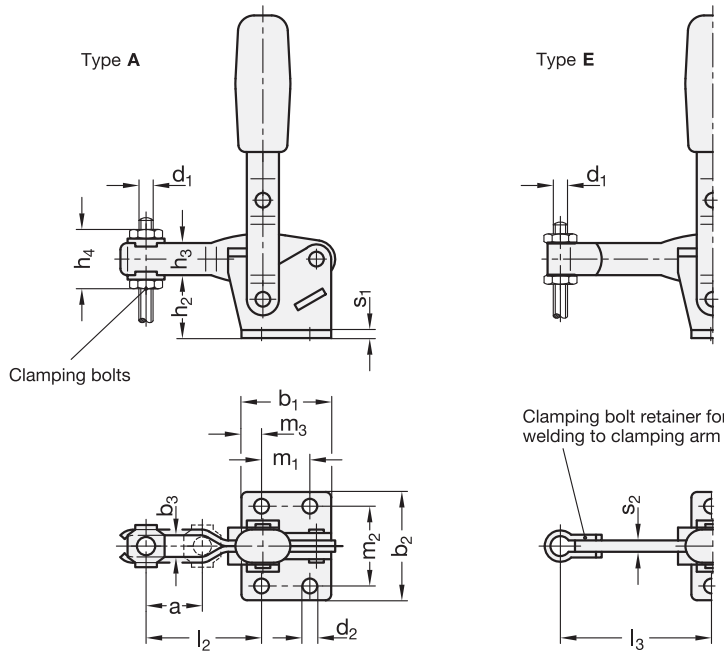
Type A
Type E
d1
h4
h3
h2
s1
Clamping bolts
b1
m3
m1
b3
m2
b2
a
l2
d2
Clamping bolt retainer for welding to clamping arm
s2
l3

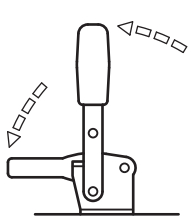

Stainless Steel-Vertical clamps

with horizontal base

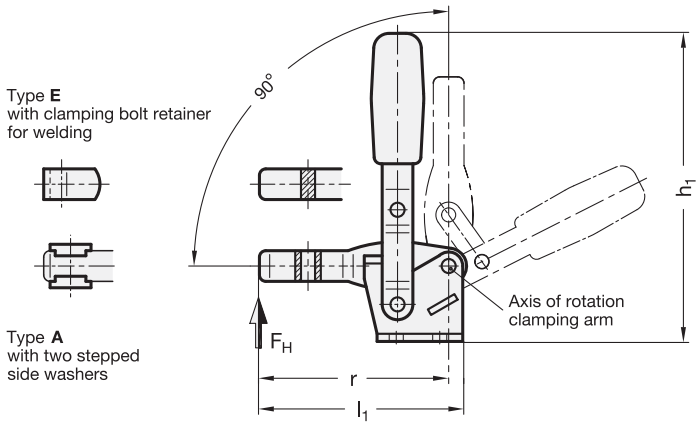

Rost frei Inox Stainless Steel

2 Type

A forked clamping arm
E solid clamping arm

1

Size	F_H in N Holding force	a ≈	b_1	b_2	b_3	d_1	d_2	h_1 ≈	h_2	h_3
70	900	20	29	34	5,5	M5	4,5	97	19	11
125	1600	28	35	42	6,5	M6	5,5	142	28	14

Size	h_4	l_1 ≈	l_2 ≈	l_3 max.	m_1	m_2	m_3	r ≈	s_1	s_2
70	22,5	67	38	48	15	24	7	62,5	2	4
125	27	86	51	62	19	29	8	79,5	2,5	5

Specification

3

- Stainless Steel AISI 304 **NI**
- all moving parts lubricated with special grease
- solid moulded plastic handle sleeve red, oil resistant
- *Stainless Steel characteristics → Page 1144*
- RoHS compliant

Accessory

- Clamping bolts → *Page 765*

Information

Stepped side washers respectively clamping bolt retainers are included.

see also...

- *General information to toggle clamps → Page 676*
- *Vertical clamps GN 810 (Steel, zinc plated) → Page 678*

How to order		
1 2 3	1	Size
GN 810-70-A-NI	2	Type
	3	Material

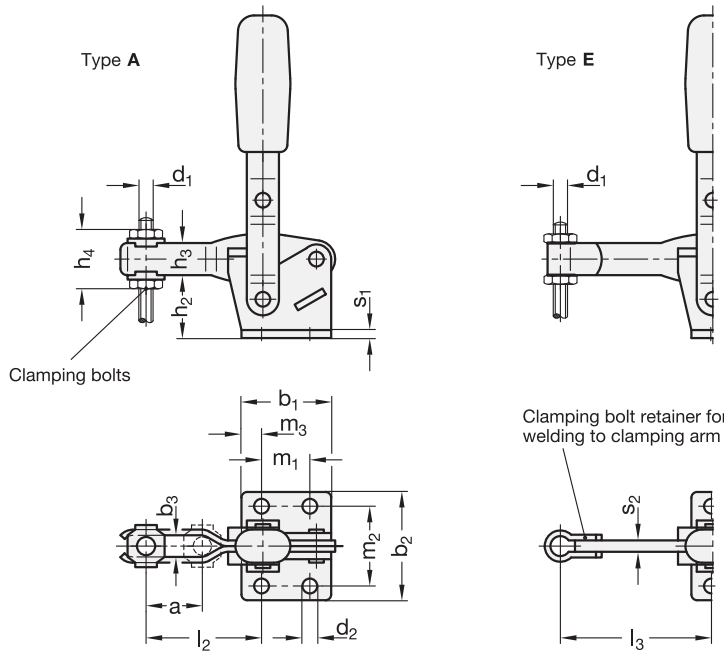
Type A
Type E
d1
h4
h3
h2
s1
Clamping bolts
b1
m3
m1
b3
m2
b2
a
l2
d2
Clamping bolt retainer for welding to clamping arm
s2
l3

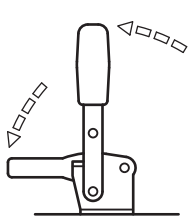

Vertical clamps

with vertical base

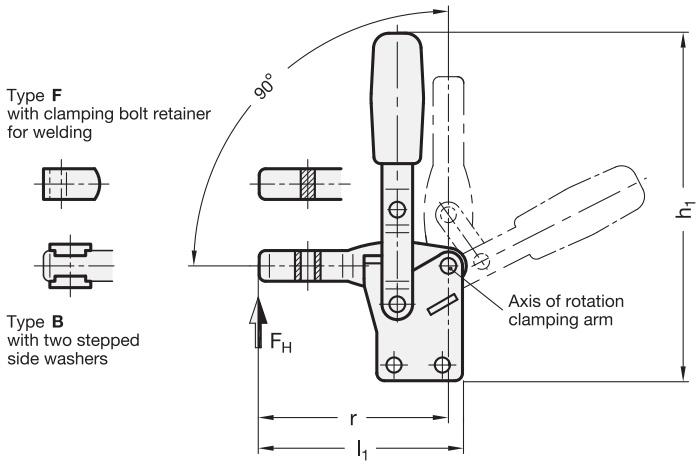

2 Type

B forked clamping arm
F solid clamping arm

1

Size	F_H in N Holding force	a ≈	b_1	b_2	b_3	b_4	d_1	d_2	h_1 ≈	h_2
70	900	20	29	8	4	5,5	M 5	4,5	109	31
125	1600	28	35	10	5	6,5	M 6	5,5	156	41,5
200	2200	40	43	12	6	8,5	M 8	6,5	175	48
300	2700	42	50	14	8	10,5	M 10	8,5	218	66
400	3000	66	52	18	10	13	M 12	8,5	249	69
500	4600	90	77	18	10	13	M 12	10,5	335	114,5

Size	h_3	h_4	l_1 ≈	l_2 ≈	l_3 max.	m_1	m_2	m_3	r ≈	s
70	11	22,5	67	38	48	15	5	7	62,5	4
125	14	27	86	48	62	19	6,5	8	79	5
200	18	35	112	70	86	20	6,5	11,5	104	6
300	20	41	130	76	95	29	9,5	10,5	122	8
400	22	49	163	104	130	32	10	10	156	10
500	30	57	224	144	168	50	10	13,5	212	10

Specification

- Parts in sheet metal
  Case hardening steel C 10
  zinc plated, blue passivated
- Bearing pins tempered
- Bearing rivets (from size 200 upwards)
  case hardened
- all moving parts
  lubricated with special grease
- solid moulded plastic handle sleeve
  red, oil resistant
- RoHS compliant

Accessory

- Clamping bolts → *Page 765*
- Holders for clamping bolts GN 809
  (for type F) → *Page 770*
- Holders for clamping bolts GN 801
  (for type B) → *Page 771*

Information

Stepped side washers respectively clamping bolt retainers are included.

see also...

- *General information to toggle clamps → Page 676*
- *Stainless Steel-Vertical clamps GN 810.1 → Page 684*
- *Vertical clamps GN 910.1 („Longlife“) → Page 688*

How to order		
GN 810.1-125-B (1 2)	1	Size
	2	Type

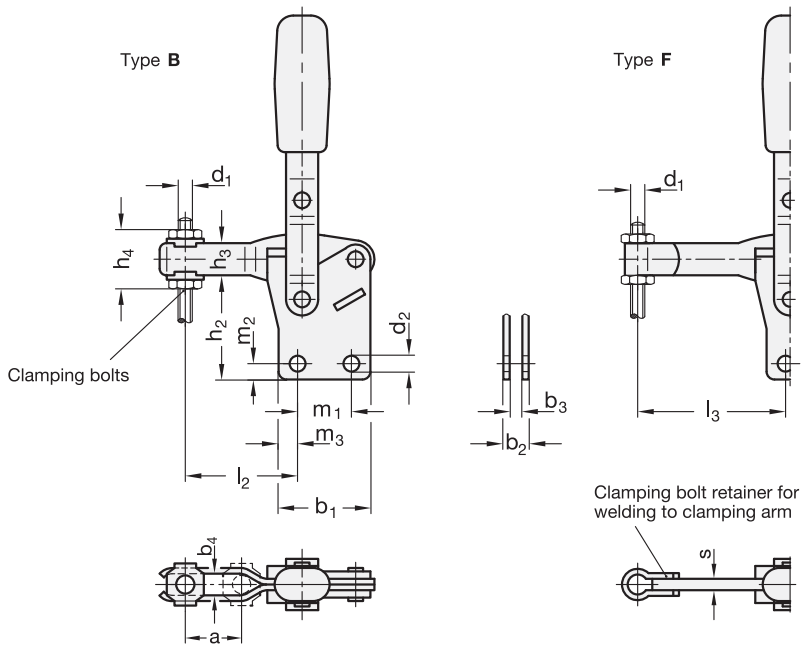
Type B
Type F
d1
h4
h3
h2
m2
d2
Clamping bolts
m1
m3
l2
b1
b3
b2
l3
Clamping bolt retainer for welding to clamping arm
s
b4
a

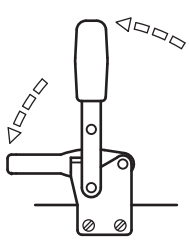

Stainless Steel-Vertical clamps

with vertical base

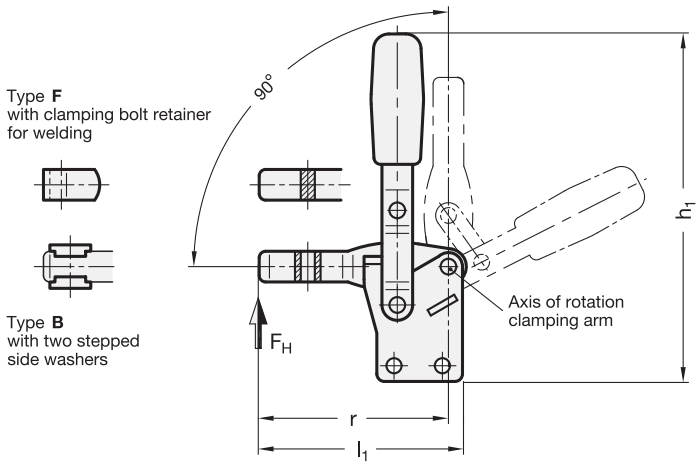

Rost frei Inox Stainless Steel

2 Type

B forked clamping arm
F solid clamping arm

1

Size	F_H in N Holding force	a ≈	b_1	b_2	b_3	b_4	d_1	d_2	h_1 ≈	h_2
70	900	20	29	8	4	5,5	M 5	4,5	109	31
125	1600	28	35	10	5	6,5	M 6	5,5	156	41,5

Size	h_3	h_4	l_1 ≈	l_2 ≈	l_3 max.	m_1	m_2	m_3	r ≈	s
70	11	22,5	67	38	48	15	5	7	62,5	4
125	14	27	86	51	62	19	6,5	8	79,5	5

Specification

3

- Stainless Steel AISI 304 **NI**
- all moving parts lubricated with special grease
- solid moulded plastic handle sleeve red, oil resistant
- *Stainless Steel characteristics → Page 1144*
- RoHS compliant

Accessory

- Clamping bolts → *Page 765*

Information

Stepped side washers respectively clamping bolt retainers are included.

see also...

- *General information to toggle clamps → Page 676*
- *Vertical clamps GN 810.1 (Steel, zinc plated) → Page 682*

How to order		
GN 810.1-125-F-NI (1 2 3)	1	Size
	2	Type
	3	Material

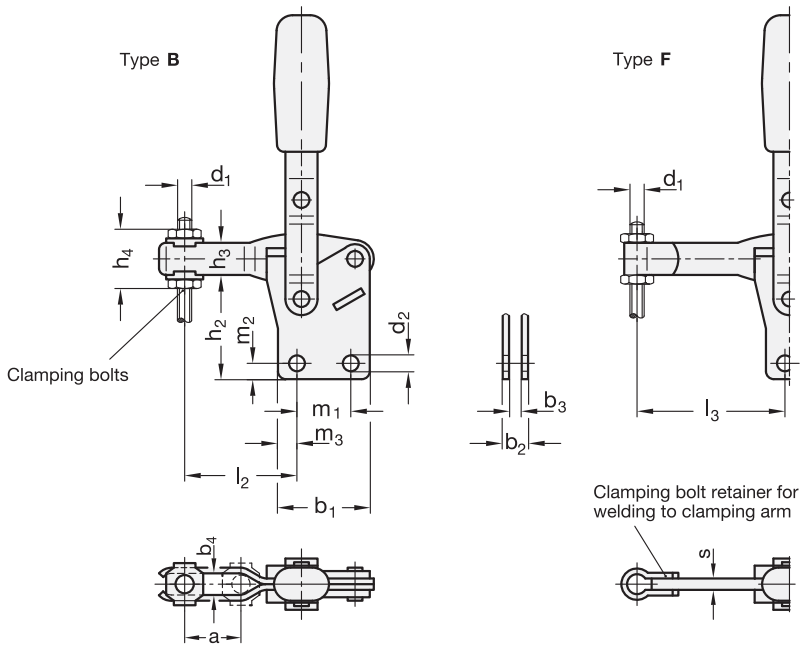
Type B
Type F
d1
h4
h3
h2
m2
d2
Clamping bolts
m1
m3
l2
b1
b3
b2
l3
Clamping bolt retainer for welding to clamping arm
s
b4
a

Vertical clamps

heavy duty type „Longlife“

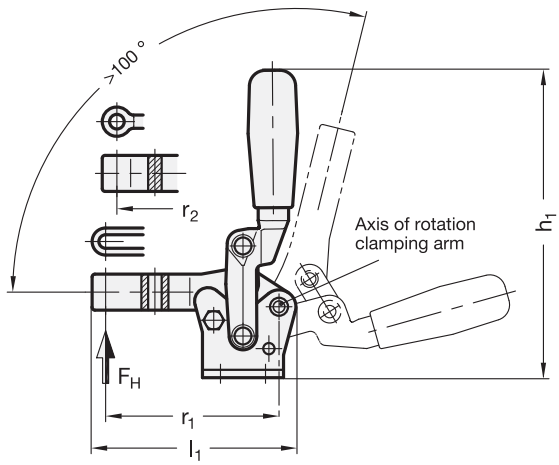

2 Type

A Clamping arm with slotted hole (only size 220 and 440)

E Clamping arm with bush

1

Size	F_H in N Holding force	a	b_1	b_2	b_3	d_1	d_2	d_3	h_1	h_2	h_3
220	2200	32	36	48	6	M 6	6,5	6,5	136,5	30	16
440	4400	34	54	65	10	M 10	8,5	10,5	215	50	24
850*	8500	-	75	75	-	M 12	10,5	12,5	280	67	30

Size	h_4 ≈	l_1 Type A	l_1 Type E	l_2	l_3	m_1	m_2	m_3	r_1	r_2	s_1	s_2
220	27	91	86	51	46	20	32	8	77	72	3,5	6
440	45	129,5	129,5	66	66	30	45	12	107	107	5	10
850*	-	-	161	-	72	55	55	10	-	133	6	12

* This size is fitted with a round handle at the lever arm and available only in type E.

Specification

- Clamping arm Steel
  - Precision casting
  - blackened
- Lever arm Steel
  - forged
  - blackened
- Parts in sheet metal
  Case hardening steel
  blackened
- Bearing pins and rivets Steel
  hardened and ground
- all moving parts
  lubricated with special grease
- solid moulded plastic handle sleeve
  red, oil resistant
- RoHS compliant

Information

Vertical clamps „Longlife“ GN 910 are an advance development of GN 810: The steel sheet design of the clamp and lever arms is replaced by precision or die-forged components. The remaining steel sheet parts have been reinforced, bearing bolts and bushings are toughened and ground.

These vertical clamps are therefore suitable for applications in which substantial forces occur and in which a long service life is required.

Extensive tests have shown that trouble-free function (under load) is ensured also after one million clamping cycles.

Stepped side washers are included.

see also...
- *General information to toggle clamps → Page 676*
- *Vertical clamps GN 810 → Page 678*

Accessory

- Clamping bolts → *Page 765*
- Holders for clamping bolts GN 801 (for type A) → *Page 771*

How to order		
GN 910-220-A (1 = Size, 2 = Type)	1	Size
	2	Type

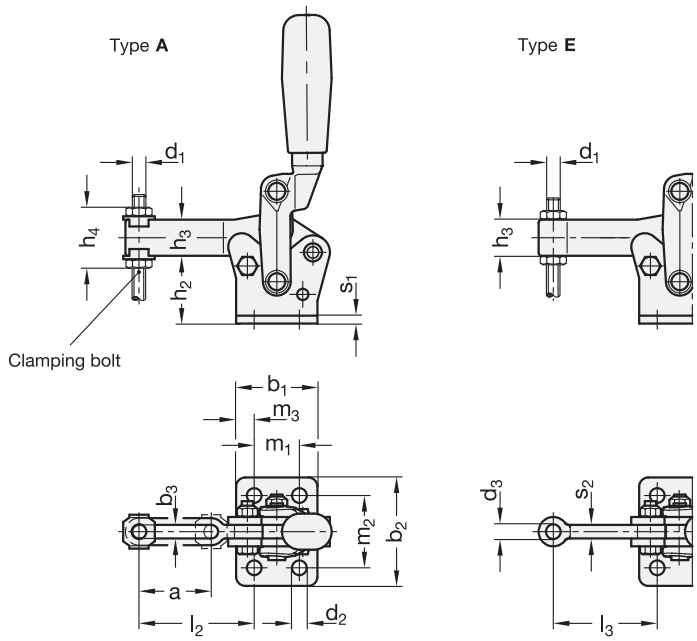
Type A
Type E
d1
h4
h3
h2
s1
Clamping bolt
b1
m3
m1
b3
m2
b2
a
l2
d2
d3
s2
l3

Vertical clamps

heavy duty type „Longlife“

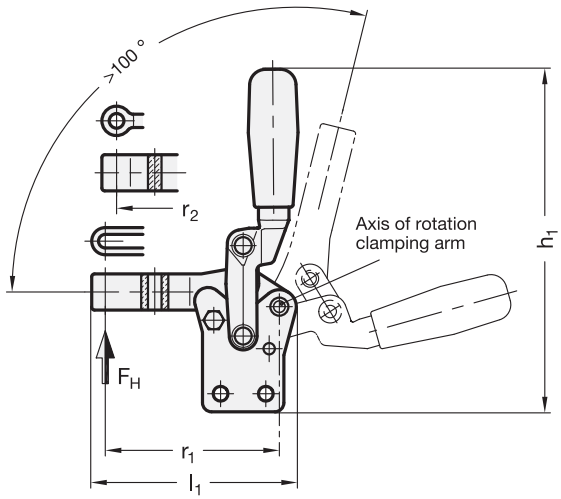

2 Type

B Clamping arm with slotted hole (only size 220 and 440)

F Clamping arm with bush

1

Size	F_H in N Holding force	a	b_1	b_2	b_3	b_4	d_1	d_2	d_3	h_1	h_2
220	2200	32	36	13	6	6	M 6	6,5	6,5	152	45,5
440	4400	34	54	20	10	10	M 10	8,5	10,5	235	69,5
850*	8500	-	75	24	12	-	M 12	10,5	10,5	301	88

Size	h_3	h_4 ≈	l_1 Type B	l_1 Type F	l_2	l_3	m_1	m_2	m_3	r_1	r_2	s
220	16	27	91	86	51	46	20	8	8	77	72	6
440	24	45	129,5	129,5	66	66	30	10	12	107	107	10
850*	30	-	-	161	-	72	55	10	10	-	133	12

* This size is fitted with a round handle at the lever arm and available only in type F.

Specification

- Clamping arm Steel
  - Precision casting
  - blackened
- Lever arm Steel
  - forged
  - blackened
- Parts in sheet metal
  Case hardening steel
  blackened
- Bearing pins and rivets, Steel
  hardened and ground
- all moving parts
  lubricated with special grease
- solid moulded plastic handle sleeve
  red, oil resistant
- RoHS compliant

Information

Vertical clamps „Longlife“ GN 910.1 are an advance development of GN 810.1: The steel sheet design of the clamp and lever arms is replaced by precision or die-forged components. The remaining steel sheet parts have been reinforced, bearing bolts and bushings are toughened and ground.

These vertical clamps are therefore suitable for applications in which substantial forces occur and in which a long service life is required.

Extensive tests have shown that trouble-free function (under load) is ensured also after one million clamping cycles.

Stepped side washers are included.

see also...
- *General information to toggle clamps → Page 780*
- *Vertical clamps GN 810.1 → Page 786*

Accessory

- Clamping bolts → *Page 765*
- Holders for clamping bolts GN 801 (for type B) → *Page 771*

How to order		
GN 910.1-440-F (1 = 440, 2 = F)	1	Size
	2	Type

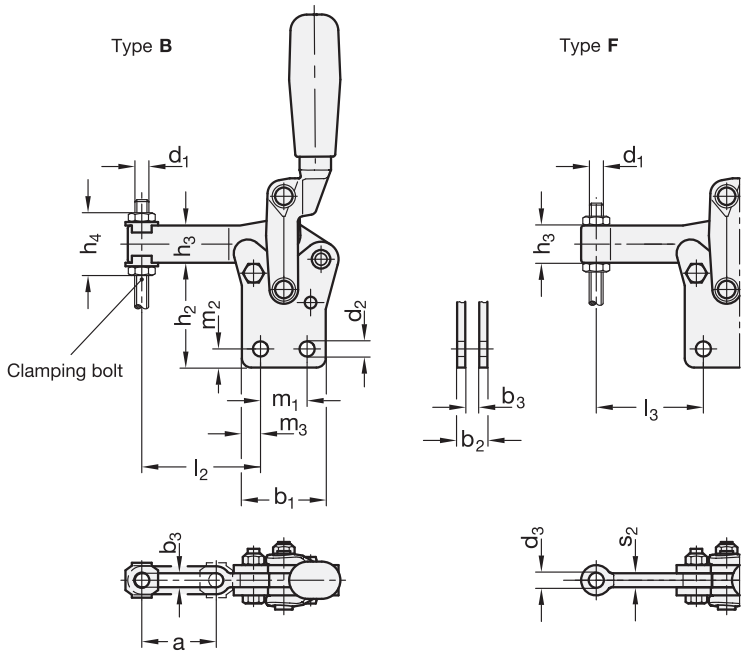
Type B
Type F
d1
h4
h3
h2
m2
d2
Clamping bolt
m1
m3
l2
b1
b3
a
b2
l3
d3
s2

Knee lever modules

to screw-on

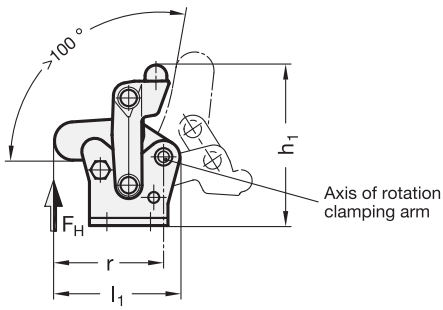

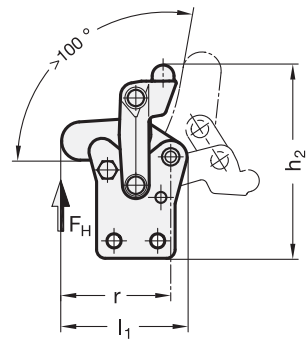

2 Type

C with horizontal base
G with vertical base

1

Size	F_H in N Holding force	b_1	b_2	b_3	b_4	d	h_1	h_2	h_3	h_4	h_5
220	2200	36	48	13	6	6,5	74	89	30	45,5	17,5
440	4400	54	65	20	10	8,5	121	140,5	50	70	28
850	8500	75	75	24	12	10,5	158	180	67	88	35

Size	l_1	l_2	l_3	m_1	m_2	m_3	m_4	r	s_1	s_2
220	57,5	24	29	20	32	8	8	50	3,5	6
440	85,5	32	42,5	30	45	12	10	73	5	10
850	115	38	52	55	55	10	10	99	6	12

Specification

- Lever arm Steel
  - forged
  - blackened
- Parts in sheet metal
  Case hardening steel C10
  blackened
- Bearing pins and rivets, Steel
  hardened and ground
- all moving parts
  lubricated with special grease
- RoHS compliant

Accessory

- Handles, lever arms,
  clamping arm elongations,
  bushes, base plates

Information

The GN 910.2 knee lever modules have the same properties and attributes as the „Longlife“ GN 910 / GN 910.1 vertical clamps: The clamping arms are die-forged, the remaining steel sheet components are highly robust in design. Bearing bolts and bushings are toughened and ground.

These vertical clamps are therefore suitable for applications in which substantial forces occur and in which a long service life is required.

Extensive tests have shown that trouble-free function (under load) is ensured also after one million clamping cycles.

These knee lever modules allow the size and position of the lever and clamping arms to be adjusted to match the specific application in hand.

see also...
- *General information to toggle clamps → Page 676*
- *Vertical clamps GN 910 → Page 686*
- *Vertical clamps GN 910.1 → Page 688*
- *Knee lever modules GN 910.3 (for welding) → Page 692*

How to order		
GN 910.2-440-G (1 = Size, 2 = Type)	1	Size
	2	Type

Type **C**

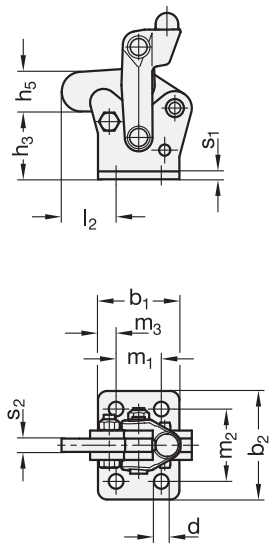

Type **G**

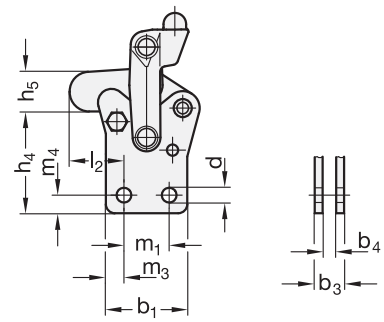

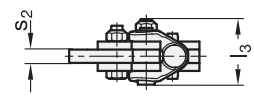

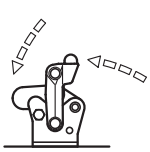

Knee lever modules

for welding

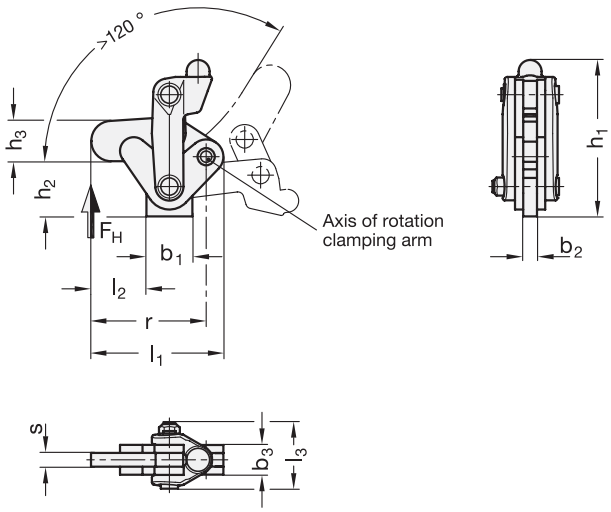

1

Size	F_H in N Holding force	b_1	b_2	b_3	h_1	h_2	h_3	l_1	l_2	l_3	r	s
220	2200	20	6	13	68	24	17,5	57,5	24	29	50	6
440	4400	30	10	20	113	42,5	28	85,5	32,5	42,5	73	10
850	8500	50	12	24	148	57	35	115	40,5	52	99	12

Specification

- Lever arm Steel
  - forged
  - blackened
- Parts in sheet metal
  Case hardening steel C10
  blackened
- Bearing pins and rivets, Steel
  hardened and ground
- all moving parts
  lubricated with special grease
- RoHS compliant

Accessory

- Handles, lever arms,
  clamping arm elongations,
  bushes, base plates → *Page 693*

Information

The GN 910.3 knee lever modules have the same properties and attributes as the „Longlife“ GN 910 / GN 910.1 vertical clamps: The clamping arms are die-forged, the remaining steel sheet components are highly robust in design. Bearing bolts and bushings are toughened and ground.

These vertical clamps are therefore suitable for applications in which substantial forces occur and in which a long service life is required.

Extensive tests have shown that trouble-free function (under load) is ensured also after one million clamping cycles.

These knee lever modules allow the size and position of the lever and clamping arms to be adjusted to match the specific application in hand. The actual module is welded on.

see also...
- *General information to toggle clamps → Page 676*
- *Vertical clamps GN 910 → Page 686*
- *Vertical clamps GN 910.1 → Page 688*
- *Knee lever modules GN 910.2 (to screw-on) → Page 690*

How to order		
1 GN 910.3-220	1	Size

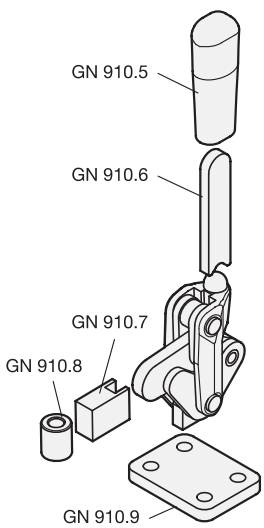

Handles

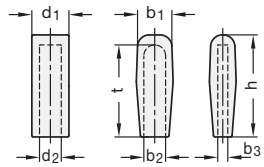

Module Size	b_1	d_1	b_2	d_2	b_3	h	t	Code No.
220	22	-	13	-	5	60	55	GN 910.5-220
440	31	-	20	-	8	86	77	GN 910.5-440
850	-	30	-	22	-	119	112	GN 910.5-850

Lever arms

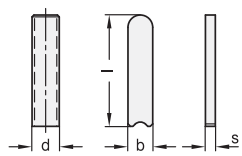

Module Size	b	d	Length l	s	Code No.
220	13	-	60	5	GN 910.6-220
440	20	-	90	8	GN 910.6-440
850	-	22	122	-	GN 910.6-850

Clamping arm elongations

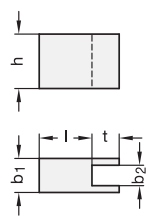

Module Size	b_1	b_2	h	Length l	t	Code No.
220	10	6	16	15,5	6,5	GN 910.7-220
440	15	10	24	16	8	GN 910.7-440
850	20	12	30	22,1	15	GN 910.7-850

Bushes

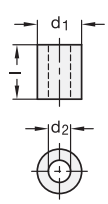

Module Size	d_1	d_2	Length l	Code No.
220	13	6,5	16	GN 910.8-220
440	20	10,5	24	GN 910.8-440
850	24	12,5	30	GN 910.8-850

Base plates

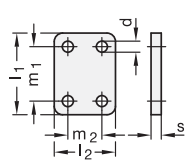

Module Size	d	l_1	l_2	m_1	m_2	s	Code No.
220	6,5	48	36	32	20	6	GN 910.9-220
440	8,5	65	54	45	30	8	GN 910.9-440
850	10,5	75	75	55	55	10	GN 910.9-850

Vertical clamps

with angled base

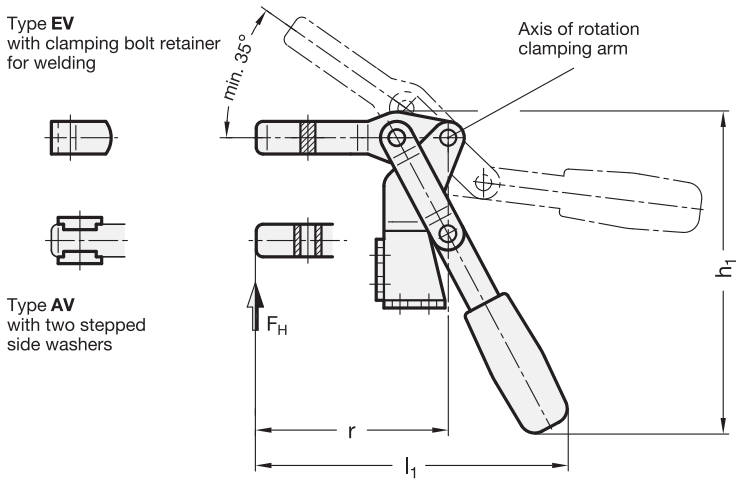

2 Type

AV forked clamping arm
EV solid clamping arm

1

Size	F_H in N Holding force	a ≈	b_1	b_2	b_3	b_4	d_1	d_2	e	h_1 ≈	h_2	h_3
200	2000	34	35	38	35	8,5	M 8	6,5	37	154	76	17
300	2700	42	48	48	51	10,4	M 10	8,5	46	198	108	20

Size	h_4	l_1 ≈	l_2 ≈	l_3 max.	m_1	m_2	m_3	m_4	m_5	r ≈	s_1	s_2
200	34	158	59	76	16	26	11	16	11	96	3	6
300	41	194	74	95	28	30	11,5	30	12	122	3	8

Specification

- Parts in sheet metal
  Case hardening steel C10
  zinc plated, blue passivated
- Bearing pins tempered
- Bearing rivets case hardened
- all moving parts
  lubricated with special grease
- solid moulded plastic handle sleeve
  red, oil resistant
- RoHS compliant

Accessory

- Clamping bolts → *Page 765*
- Holders for clamping bolts GN 809
  (for type EV) → *Page 770*
- Holders for clamping bolts GN 801
  (for type AV) → *Page 771*

Information

Worth pointing out is that the vertical clamp GN 812 can be mounted in two planes and requires less space for the clamping movement since the clamping arm and the operating lever are moving in opposite directions.

Stepped side washers respectively clamping bolt retainers are included.

see also...

- *General information to toggle clamps → Page 676*

How to order		
GN 812-300-EV (1 = Size, 2 = Type)	1	Size
	2	Type

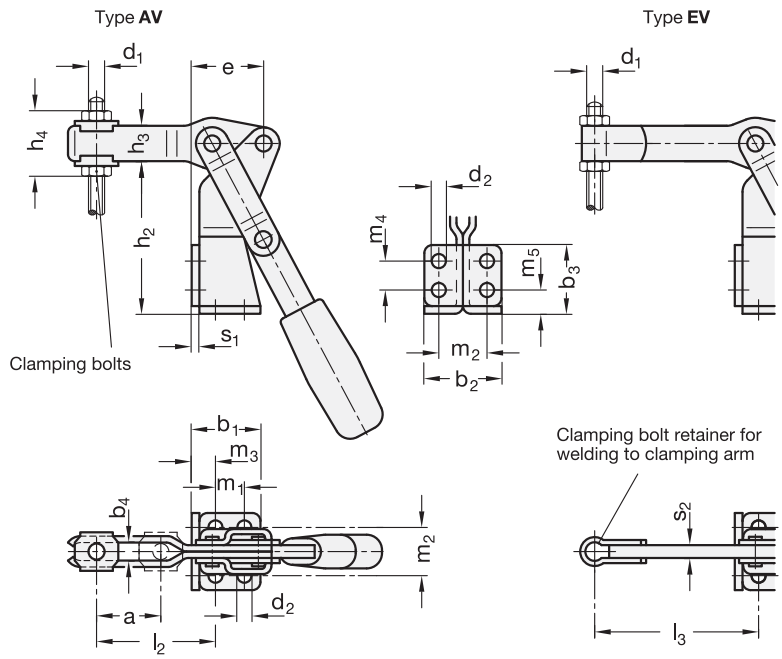
Type AV
Type EV
d1
e
h4
h3
h2
s1
Clamping bolts
d2
m4
m5
b3
m2
b2
b1
m3
m1
b4
m2
a
d2
l2
Clamping bolt retainer for welding to clamping arm
s2
l3

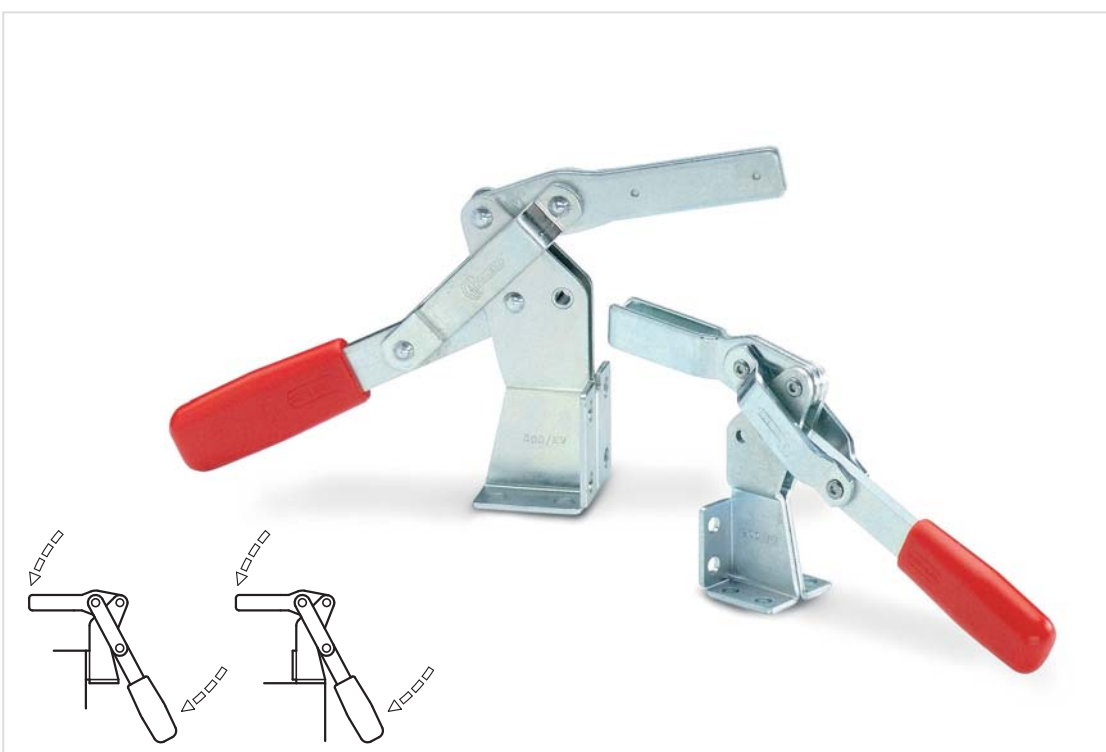

Vertical clamps

with angled base

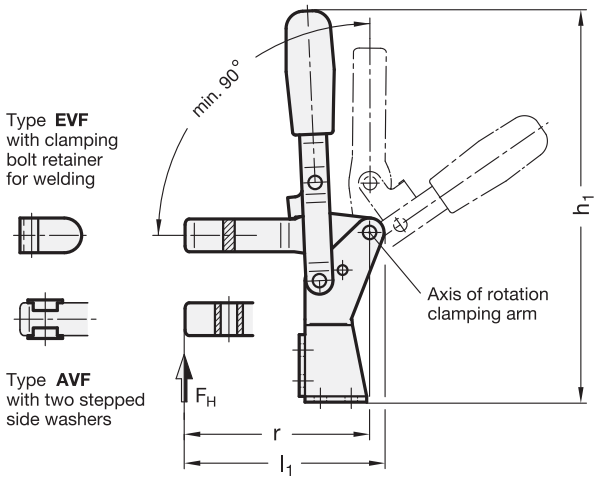

2 Type

AVF forked clamping arm
EVF closed clamping arm

1

Size	F_H in N Holding force	a ≈	b_1	b_2	b_3	b_4	d_1	d_2	h_1 ≈	h_2	h_3	h_4 ≈
200	1600	36	35	38	35	8,5	M 8	6,5	203	77	17	34
300	2400	50	48	48	51	10,2	M 10	8,5	258	105	20	41

Size	l_1 ≈ Type AVF	l_1 ≈ Type EVF	l_2	l_3 max.	m_1	m_2	m_3	m_4	m_5	r Type AVF	r Type EVF	s_1	s_2
200	103	105	61	85	16	26	11	16	11	95,5	97,5	3	6
300	130	132	75	100	28	30	11,5	30	12	121,5	123	3	8

Specification

- Parts in sheet metal
  Case hardening steel C10
  zinc plated, blue passivated
- Bearing pins tempered
- Bearing rivets case hardened
- all moving parts
  lubricated with special grease
- solid moulded plastic handle sleeve
  red, oil resistant
- RoHS compliant

Accessory

- Clamping bolts → *Page 765*
- Holders for clamping bolts GN 809
  (for type EVF) → *Page 770*
- Holders for clamping bolts GN 801
  (for type AVF) → *Page 771*

Information

A special feature of the vertical clamps GN 812.1 is that they can be mounted in two different planes.

see also...

- *General information to toggle clamps → Page 676*

How to order		
GN 812.1-200-EVF (1 = Size, 2 = Type)	1	Size
	2	Type

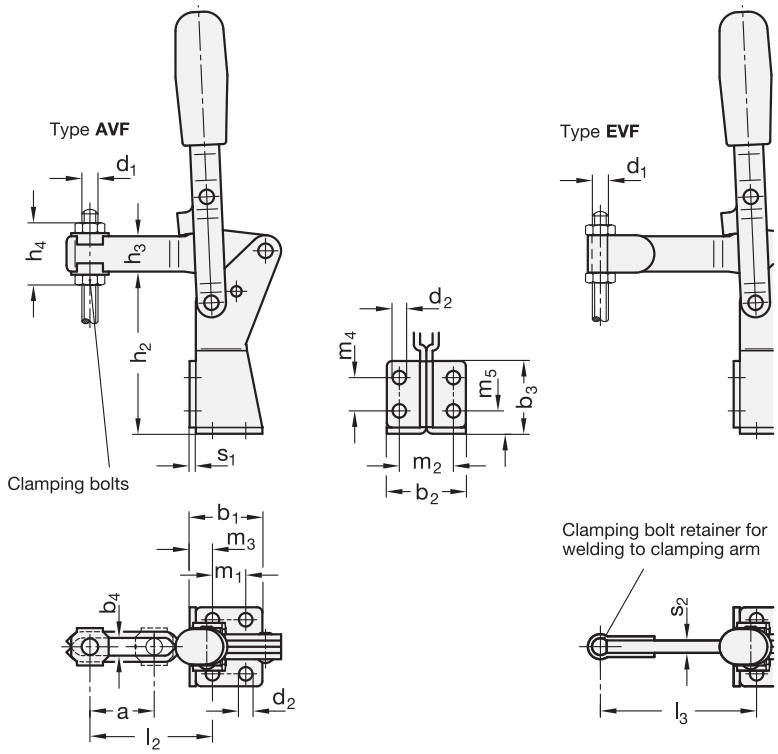
Type **AVF**
d_1
h_4
h_3
h_2
s_1
Clamping bolts
d_2
m_4
m_5
b_3
m_2
b_2
Type **EVF**
d_1
b_1
m_3
m_1
b_4
a
d_2
l_2
Clamping bolt retainer for welding to clamping arm
s_2
l_3

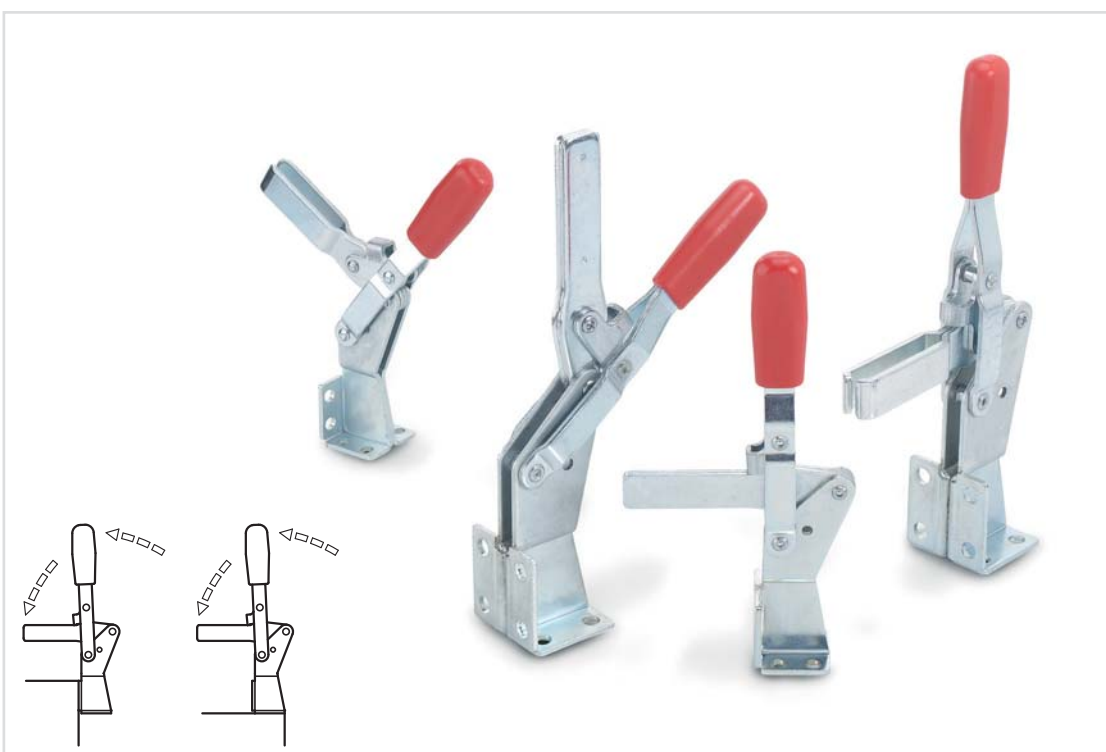

Vertical clamps

heavy duty Type

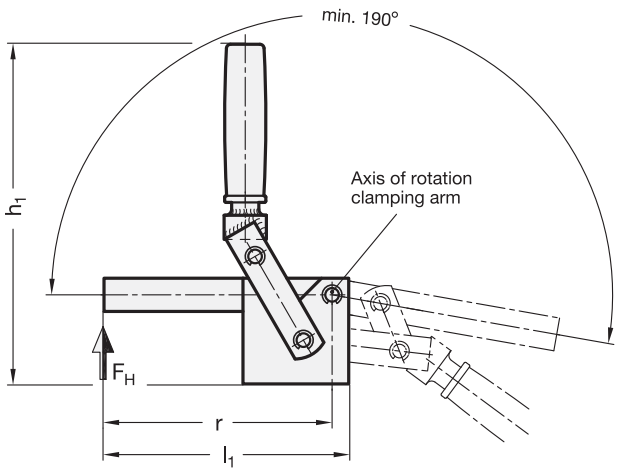

2 Type

F solid clamping arm

1

Size	F_H in N Holding force	b_1	b_2	b_3	b_4	e
1000	10000	80	36	20	20	67
2000	20000	100	36	20	20	82
3000	30000	110	45	25	25	90

Size	h_1	h_2	h_3	l_1	l_2	r
1000	265	55	25	190	110	177
2000	297	65	35	220	120	202
3000	320	80	40	250	140	230

Specification

- Clamping arm, bearing pins
  Steel St 60
  blackened
- other parts
  Steel St 37
  - weldable
  - blackened
- Bearing pins / bearing rivets
  case hardened
- all moving parts
  lubricated with special grease
- solid moulded plastic handle sleeve
  red, oil resistant
- RoHS compliant

Information

Vertical clamps GN 813 are used for applications where a very high holding force is required such as closing of foam moulds.

These clamps have been designed for easy dismantling: i.e. the bearing pins are locked with circlips.

After dismantling the individual parts, they can be modified to suit individual applications.

see also...

- *General information to toggle clamps → Page 676*

How to order		
GN 813-2000-F (1 = Size, 2 = Type)	1	Size
	2	Type

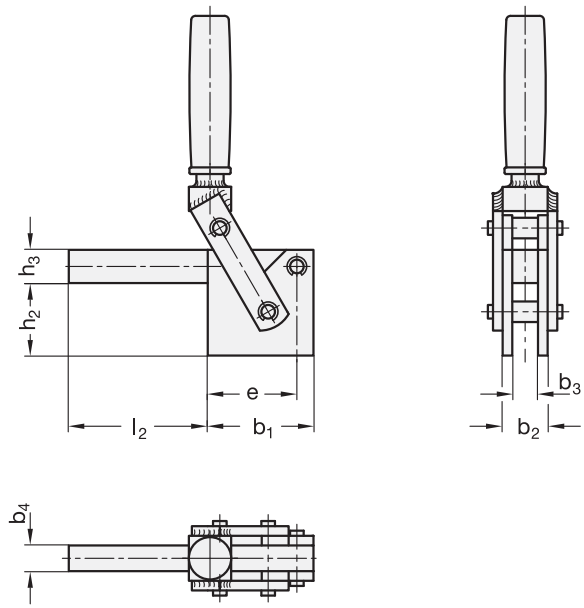
h3
h2
e
l2
b1
b3
b2
b4

Horizontal clamps

with horizontal base

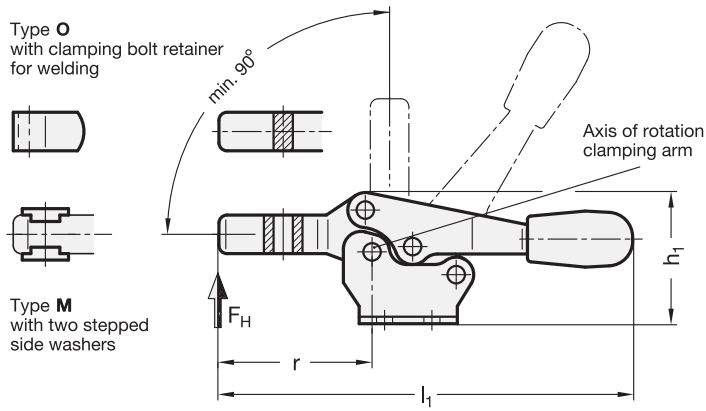

2 Type

M forked clamping arm
O solid clamping arm

1

Size	F_H in N Holding force	a ≈	b_1	b_2	b_3	d_1	d_2	h_1 ≈	h_2	h_3	h_4
25*	400	10	24	24,5	4,3	M 4	4,3	23	12	7	15
75	900	20	28	26	5,5	M 5	4,5	37	20	11	22,5
130	1000	32	36	40	6,5	M 6	5,5	51	29	14	27
230	1600	37	44	42	8,5	M 8	6,5	61,5	36,5	18	35
355	3200	58	60	56	10,4	M 10	8,5	83	50	22	43
455	6200	65	70	65	12,4	M 12	8,5	98,5	60	26	53

Size	l_1 ≈	l_2 ≈	l_3 ≈	l_4 max.	m_1	m_2	m_3	r	s_1	s_2
25	68	43	20	-	15	16	4,5	24,5	1,2	-
75	118	67	40	49,5	13,5	17	7,2	43	2	4
130	168	92	53	64	26	26	5	62	2,5	5
230	196	110	63,5	78	26	28,5	9	72	3	6
355	270	161	96	115	41	41	9,5	108,5	3,5	7
455	309	186	116	135	41,5	41,5	14,2	126	4	10

* Size 25 only available as type M.

Specification

- Parts in sheet metal
  Case hardening steel C10
  zinc plated, blue passivated
- Bearing pins tempered
- Bearing rivets (from size 355 upwards)
  case hardened
- all moving parts
  lubricated with special grease
- solid moulded plastic handle sleeve
  red, oil resistant
- RoHS compliant

Information

A special feature for the horizontal clamp GN 820 is its low profile in clamping position.

They are designed in such a way to avoid the operator's fingers being caught between the retracting clamping arm and the operating handle (safety distance).

Stepped side washers respectively clamping bolt retainers are included.

see also...
- *General information to toggle clamps → Page 676*
- *Stainless Steel-Horizontal clamps GN 820 → Page 702*
- *Horizontal clamps GN 820.2 → Page 708*

Accessory

- Clamping bolts → *Page 765*
- Holders for clamping bolts GN 809
  (for type O) → *Page 770*
- Holders for clamping bolts GN 801
  (for type M) → *Page 771*

How to order		
GN 820-75-M (1 = 75, 2 = M)	1	Size
	2	Type

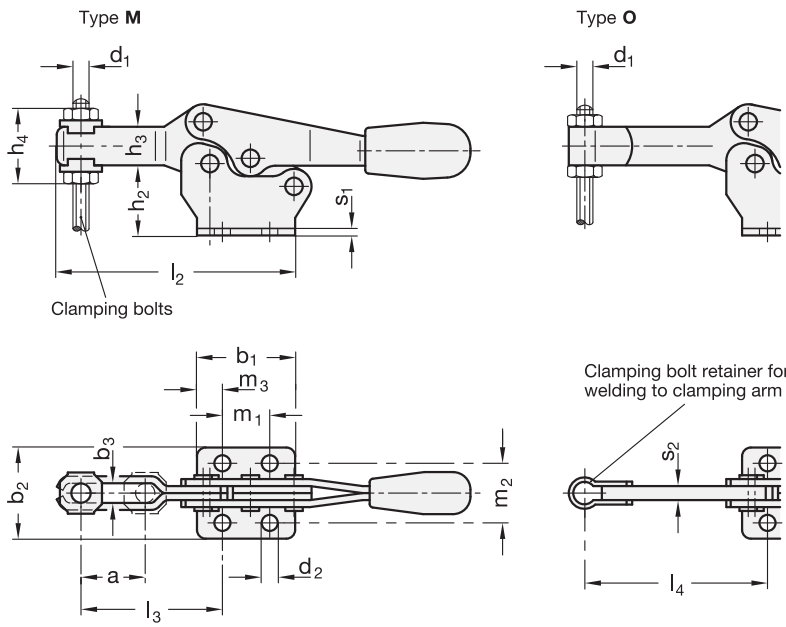
Type **M**
Type **O**
d1
h4
h3
h2
s1
l2
Clamping bolts
b1
m3
m1
b3
b2
m2
a
d2
l3
Clamping bolt retainer for welding to clamping arm
s2
l4

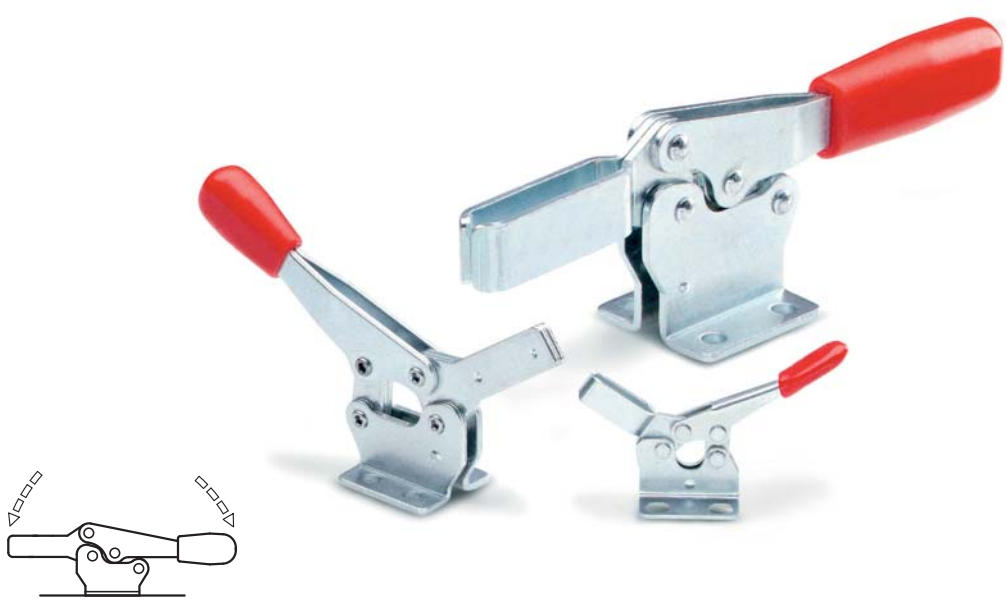

Stainless Steel-Horizontal clamps

with horizontal base

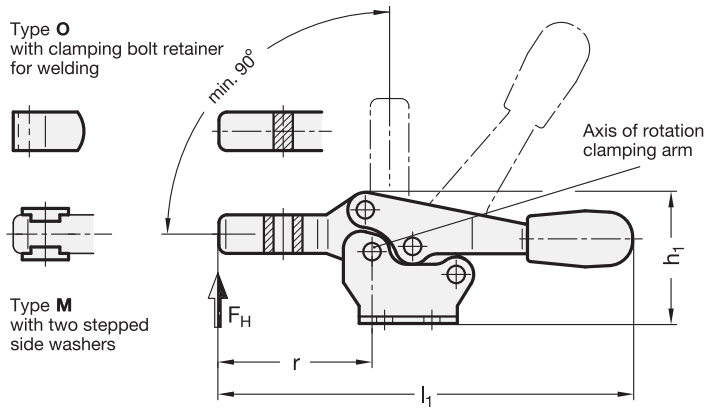

Rost frei — Inox Stainless Steel

2 Type

M forked clamping arm
O solid clamping arm

1

Size	F_H in N Holding force	a ≈	b_1	b_2	b_3	d_1	d_2	h_1 ≈	h_2	h_3	h_4
25*	400	10	24	24,5	4,3	M 4	4,3	23	12	7	15
75	900	20	28	26	5,5	M 5	4,5	37	20	11	22,5
130	1000	32	36	40	6,5	M 6	5,5	51	29	14	27
230	1600	37	44	42	8,5	M 8	6,5	61,5	36,5	18	35

Size	l_1 ≈	l_2 ≈	l_3 ≈	l_4 max.	m_1	m_2	m_3	r ≈	s_1	s_2
25	68	43	20	-	15	16	4,5	24,5	1,2	-
75	118	67	40	49,5	13,5	17	7,2	43	2	4
130	168	92	53	64	26	26	5	62	2,5	5
230	196	110	63,5	78	26	28,5	9	72	3	6

* Size 25 only available as type M.

Specification

3

- Stainless Steel AISI 304 **NI**
- all moving parts lubricated with special grease
- solid moulded plastic handle sleeve red, oil resistant
- *Stainless Steel characteristics → Page 1144*
- RoHS compliant

Accessory

- Clamping bolts → *Page 807*

Information

A special feature for the Stainless Steel-Horizontal clamp GN 820 is its low profile in clamping position.

They are designed in such a way to avoid the operator‘s fingers being caught between the retracting clamping arm and the operating handle (safety distance).

Stepped side washers respectively clamping bolt retainers are included.

see also...

- *General information to toggle clamps → Page 676*
- *Horizontal clamps GN 820 (Steel, zinc plated) → Page 700*
- *Stainless Steel-Horizontal clamps GN 820.2 → Page 708*

How to order		
1 2 3	1	Size
GN 820-75-M-NI	2	Type
	3	Material

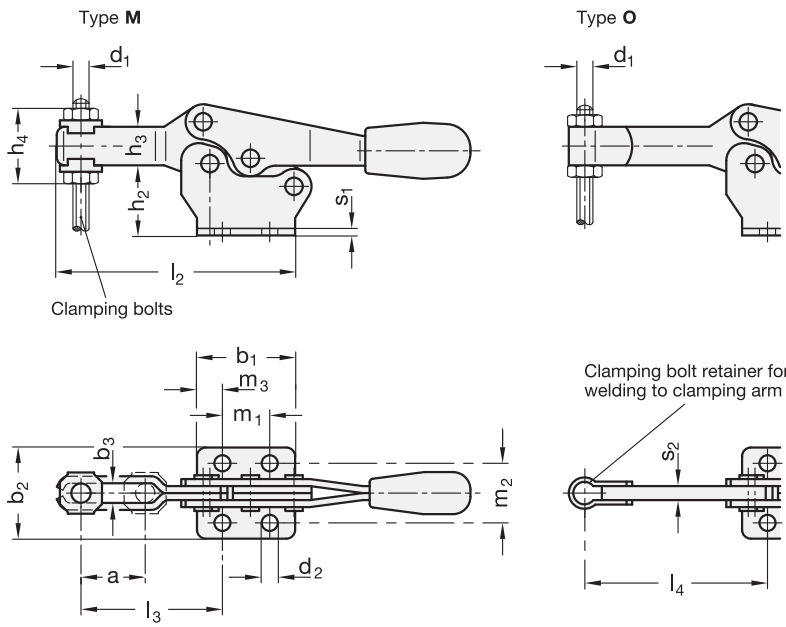
Type **M**
Type **O**
d_1
h_4
h_3
h_2
s_1
l_2
Clamping bolts
b_1
m_3
m_1
b_3
b_2
m_2
a
d_2
l_3
Clamping bolt retainer for welding to clamping arm
s_2
l_4

Horizontal clamps

with vertical base

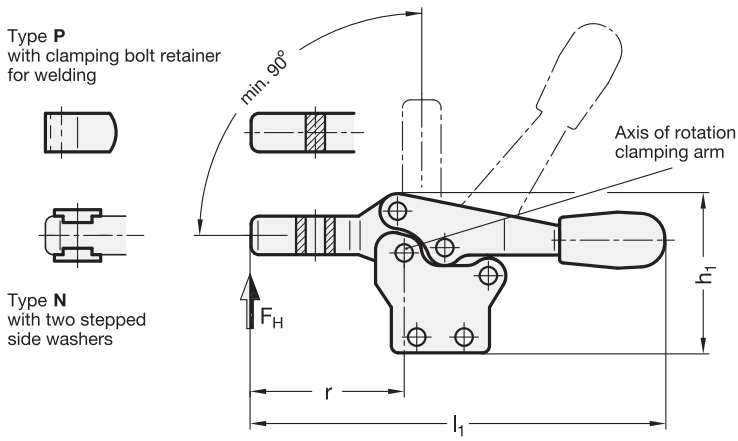

2 Type

N forked clamping arm
P solid clamping arm

1

Size	F_H in N Holding force	a ≈	b_1	b_2	b_3	b_4	d_1	d_2	h_1 ≈	h_2	h_3
75	900	20	28	8	4	5,5	M 5	4,5	45,5	27,5	11
130	1000	32	36	10	5	6,5	M 6	5,5	64	43	14
230	1700	37	44	12	6	8,5	M 8	6,5	75	50	18
355	3200	58	60	14	7	10,4	M 10	8,5	102	69	22
455	6200	65	70	18	10	12,4	M 12	8,5	119	80,5	26

Size	h_4	l_1 ≈	l_2 ≈	l_3 ≈	l_4 max.	m_1	m_2	m_3	r ≈	s
75	22,5	118	68	40	49,5	13,5	4,5	7,2	43	4
130	27	170	92	53	64	26	7	5	62	5
230	35	196	109	63,5	78	26	6,8	9	73	6
355	43	270	161	96	115	41	7,5	9,5	110	7
455	53	309	186	116	135	41,5	11,8	14,2	128	10

Specification

- Parts in sheet metal
  Case hardening steel C10
  zinc plated, blue passivated
- Bearing pins tempered
- Bearing rivets (from size 355 upwards)
  case hardened
- all moving parts
  lubricated with special grease
- solid moulded plastic handle sleeve
  red, oil resistant
- RoHS compliant

Accessory

- Clamping bolts → *Page 765*
- Holders for clamping bolts GN 809
  (for type P) → *Page 770*
- Holders for clamping bolts GN 801
  (for type N) → *Page 771*

Information

A special feature for the horizontal clamp GN 820.1 is its low profile in clamping position.

They are designed in such a way to avoid the operator's fingers being caught between the retracting clamping arm and the operating handle (safety distance).

Stepped side washers respectively clamping bolt retainers are included.

see also...
- *General information to toggle clamps → Page 676*
- *Stainless Steel-Horizontal clamps GN 820.1 → Page 706*
- *Horizontal clamps GN 820.2 → Page 708*

How to order		
GN 820.1-355-N (1 2)	1	Size
	2	Type

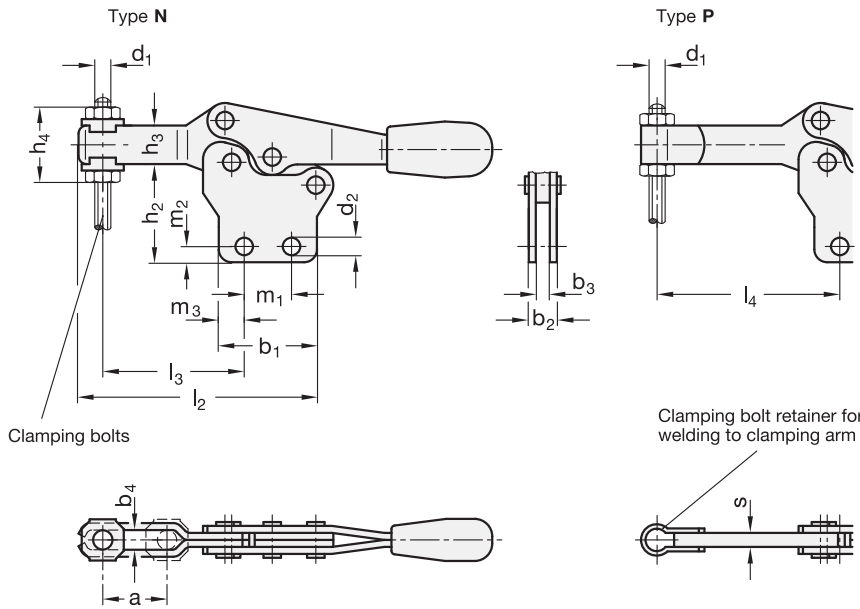
Type N
Type P
d1
h4
h3
h2
m2
d2
m3
m1
b1
l3
l2
b3
b2
l4
Clamping bolts
Clamping bolt retainer for welding to clamping arm
b4
a
s

Stainless Steel-Horizontal clamps

with vertical base

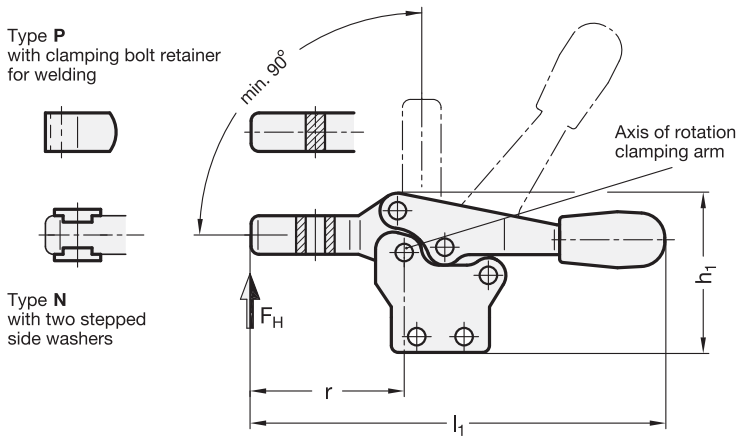

Rost frei Inox Stainless Steel

2 Type

N forked clamping arm
P solid clamping arm

1

Size	F_H in N Holding force	a ≈	b_1	b_2	b_3	b_4	d_1	d_2	h_1 ≈	h_2	h_3
75	900	20	28	8	4	5,5	M 5	4,5	45,5	27,5	11
130	1000	32	36	10	5	6,5	M 6	5,5	64	43	14
230	1600	37	44	12	6	8,5	M 8	6,5	75	50	18

Size	h_4	l_1 ≈	l_2 ≈	l_3 ≈	l_4 max.	m_1	m_2	m_3	r ≈	s
75	22,5	118	68	40	49,5	13,5	4,5	7,2	43	4
130	27	170	92	53	64	26	7	5	62	5
230	35	196	109	63,5	78	26	6,8	9	73	6

Specification

3

- Stainless Steel AISI 304 **NI**
- all moving parts lubricated with special grease
- solid moulded plastic handle sleeve red, oil resistant
- *Stainless Steel characteristics → Page 1144*
- RoHS compliant

Accessory

- Clamping bolts → *Page 765*

Information

A special feature for the Stainless Steel-Horizontal clamp GN 820.1 is its low profile in clamping position.

They are designed in such a way to avoid the operator‘s fingers being caught between the retracting clamping arm and the operating handle (safety distance).

Stepped side washers respectively clamping bolt retainers are included.

see also...

- *General information to toggle clamps → Page 767*
- *Horizontal clamps GN 820.1 (Steel, zinc plated) → Page 704*
- *Stainless Steel-Horizontal clamps GN 820.2 → Page 710*

How to order

1 2 3

GN 820.1-75-P-NI

1	Size
2	Type
3	Material

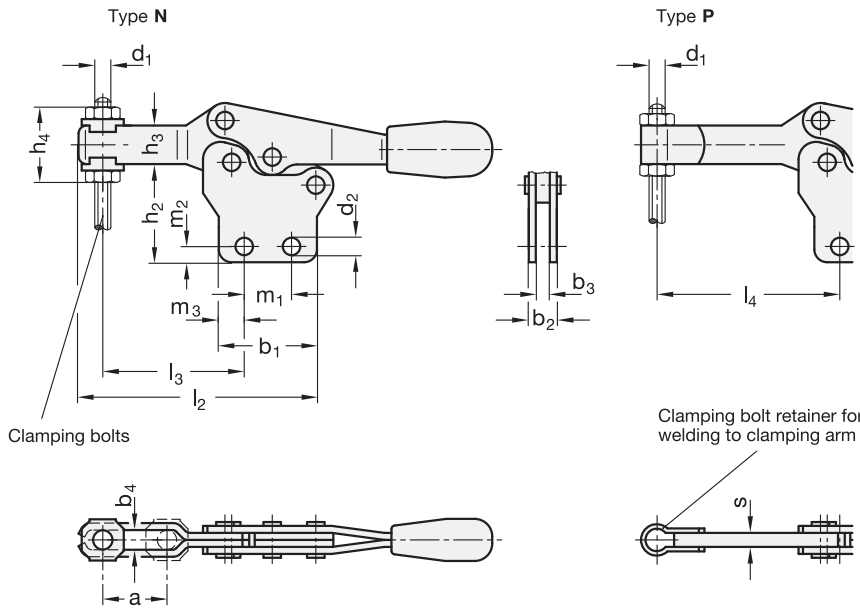
Type N
Type P
d1
h4
h3
h2
m2
d2
m3
m1
b1
l3
l2
b3
b2
l4
Clamping bolts
Clamping bolt retainer for welding to clamping arm
b4
a
s

Horizontal clamps

for side mounting

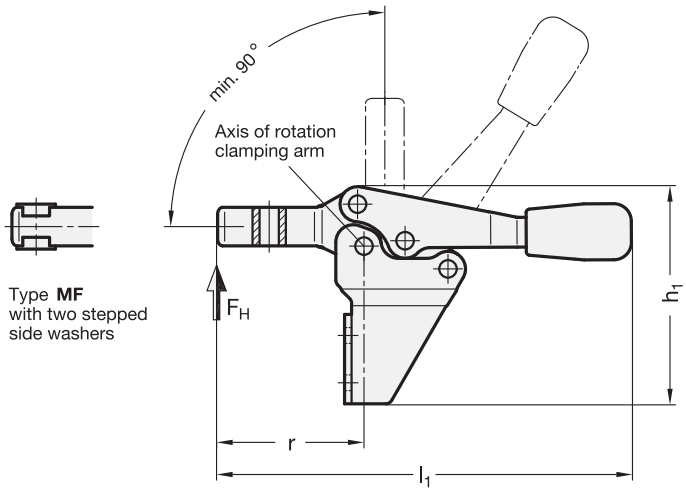

2 Type

MF forked clamping arm

1

Size	F_H in N Holding force	a ≈	b_1	b_2	b_3	d_1	d_2	h_1	h_2
75	900	20	30	25,5	5,5	M 5	4,5	62	39
130	1000	32	39	35	6,5	M 6	5,5	85	58,5
230	1700	37	43	40	8,5	M 8	6,5	102	69
355	1800	58	52	52	10,5	M 10	8,5	135	92

Size	h_3	h_4	l_1	l_2	l_3	m_1	m_2	m_3	r	s
75	11	22,5	118	30	72	18	13,5	6	42,5	2
130	14	27	170	45	95	26	22	6,5	61	2,5
230	18	35	195	52	113	28,5	24	8	70	3
355	22	43	270	85	166	32	32	10	108,5	3,5

Specification

- Parts in sheet metal
  Case hardening steel C10
  zinc plated, blue passivated
- Bearing pins tempered
- Bearing rivets (for size 355)
  case hardened
- all moving parts
  lubricated with special grease
- solid moulded plastic handle sleeve
  red, oil resistant
- RoHS compliant

Information

Horizontal clamps GN 820.2 are designed to ensure that, when opening, the operator's fingers are not trapped between the clamping lever and the clamping arm (safety distance).

Stepped side washers are included.

see also...
- *General information to toggle clamps → Page 676*
- *Stainless Steel-Horizontal clamps GN 820.2 → Page 710*

Accessory

- Clamping bolts → *Page 765*
- Holders for clamping bolts GN 801 (for type MF) → *Page 770*

How to order		
GN 820.2-130-MF (1 = Size, 2 = Type)	1	Size
	2	Type

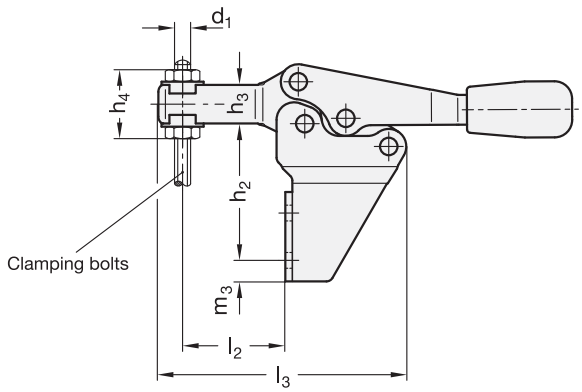
d1
h4
h3
h2
Clamping bolts
m3
l2
l3

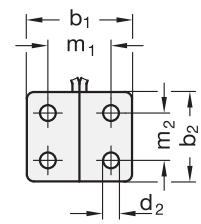
b1
m1
m2
b2
d2

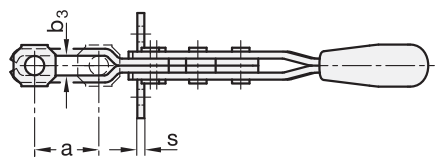
b3
a
s

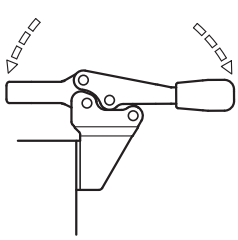

Stainless Steel-Horizontal clamps

for side mounting

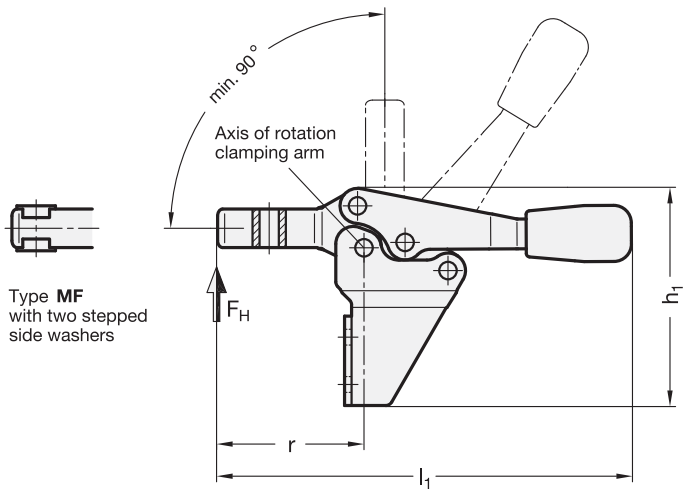

Rost frei Inox Stainless Steel

2 Type

MF forked clamping arm

1

Size	F_H in N Holding force	a ≈	b_1	b_2	b_3	d_1	d_2	h_1	h_2
75	900	20	30	25,5	5,5	M 5	4,5	62	39
130	1000	32	39	35	6,5	M 6	5,5	85	58,5
230	1700	37	43	40	8,5	M 8	6,5	102	69

Size	h_3	h_4	l_1	l_2	l_3	m_1	m_2	m_3	r	s
75	11	22,5	118	30	71	18	13,5	6	42	2
130	14	27	170	45	95	26	22	6,5	61	2,5
230	18	35	195	52	113	28,5	24	8	70	3

Specification

3

- Stainless Steel AISI 304 **NI**
- all moving parts lubricated with special grease
- solid moulded plastic handle sleeve red, oil resistant
- *Stainless Steel characteristics → Page 1144*
- RoHS compliant

Accessory

- Clamping bolts → *Page 765*

Information

Stainless Steel-Horizontal clamps GN 820.2are designed to ensure that, when opening, the operator's fingers are not trapped between the clamping lever and the clamping arm (safety distance).

Stepped side washers are included.

see also...

- *General information to toggle clamps → Page 676*
- *Horizontal clamps GN 820.2 (Steel zinc plated) → Page 708*

How to order		
GN 820.2-230-MF-NI (1 2 3)	1	Size
	2	Type
	3	Material

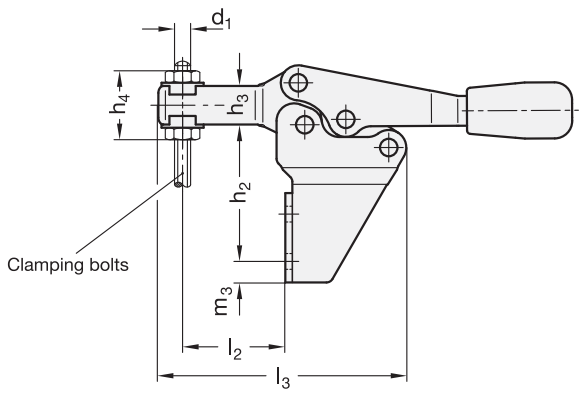
d1
h4
h3
h2
Clamping bolts
m3
l2
l3

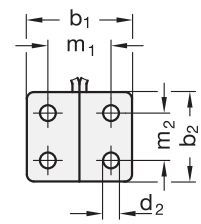
b1
m1
m2
b2
d2

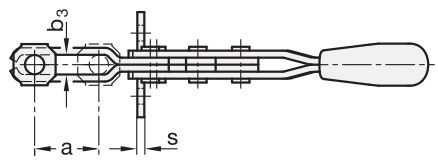
b3
a
s

Plunger clamps

for push-pull clamping

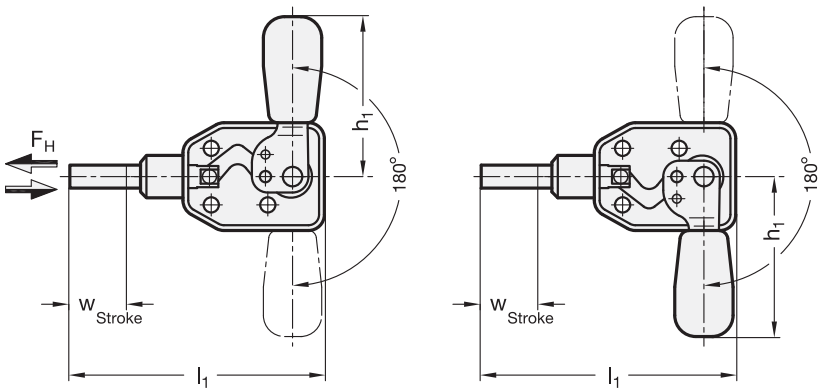

2 Type

ASD Clamping by turning handle to the left

ASS Clamping by turning handle to the right

1

Size	F_H in N Holding force	a	b	d_1	d_2	d_3	d_4	h_1 ≈	h_2
50	800	10	17,5	6,5	M 4	12	4,3	45,2	30,5

Size	l_1 ≈	l_2 ≈	l_3 ≈	l_4 ≈	m_1	m_2	m_3	t min.	w Stroke
50	73	64,5	33	21	16	16	7	9	16

Specification

- Parts in sheet metal
  Case hardening steel C10
  zinc plated, blue passivated
- Plunger Steel St 37
  zinc plated, blue passivated
- Guide bush Steel St 37
  zinc plated, blue passivated
- all moving parts
  lubricated with special grease
- solid moulded plastic handle sleeve
  red, oil resistant
- RoHS compliant

Accessory

- Clamping bolts → *Page 765*

Information

Plunger operated clamps GN 840 are known for their extremely low height irrespective of the position of the operating handle.

see also...

- *General information to toggle clamps → Page 676*

How to order		
GN 840-50-ASD (1 = Size, 2 = Type)	1	Size
	2	Type

Type **ASD**

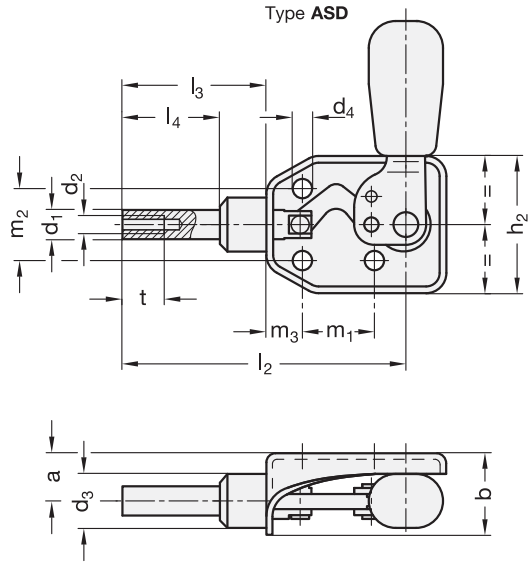

Type **ASS** is mirror image of type ASD

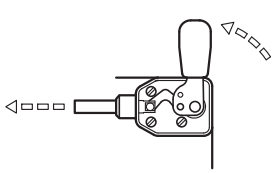

Plunger clamps

for push-pull clamping

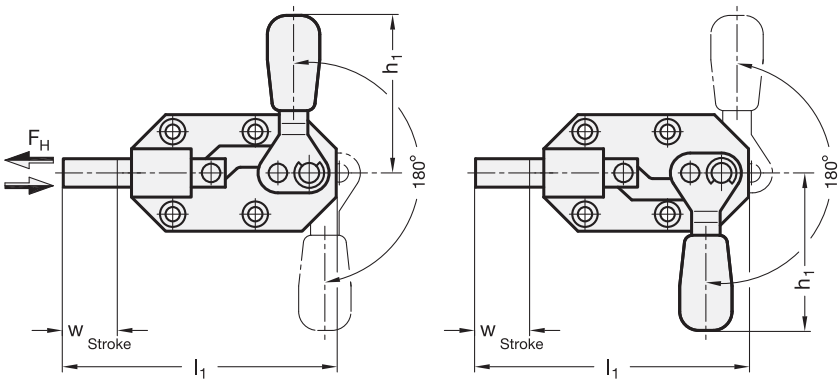

2 Type

ASD Clamping by turning handle to the left

ASS Clamping by turning handle to the right

1

Size	F_H in N Holding force	a	b	d_1	d_2	d_3	h_1 ≈	h_2	l_1 ≈
70	900	12	19,5	8,5	M 6	4,3	49	36	86
160	1300	15	25	11	M 6	5,3	79	46	117

Size	l_2 ≈	l_3 ≈	m_1	m_2	m_3	s	t	w Stroke
70	77	22	26	26	13	6	12	20
160	107	32	36,5	33,5	11	10	12	30

Specification

- Body Brass
  black lacquered
- Parts in sheet metal
  Case hardening steel C10
  zinc plated, blue passivated
- Plunger Steel St 37
  zinc plated, blue passivated
- all moving parts
  lubricated with special grease
- solid moulded plastic handle sleeve
  red, oil resistant
- RoHS compliant

Accessory

- Clamping bolts → *Page 765*

Information

Plunger operated clamps GN 844 are known for their low height in all clamping positions. The hot forged brass body gives the clamp stability. In addition brass offers excellent gliding characteristics for guiding the plunger.

see also...

- *General information to toggle clamps → Page 676*

How to order		
GN 844-70-ASS (1 = Size, 2 = Type)	1	Size
	2	Type

Type **ASD**

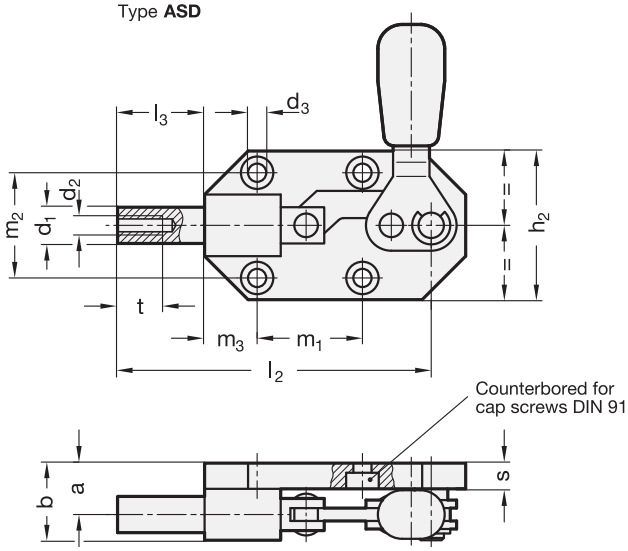

Type **ASS** is mirror image of type ASD

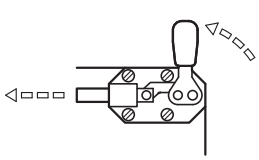

Plunger clamps

for push-on clamping

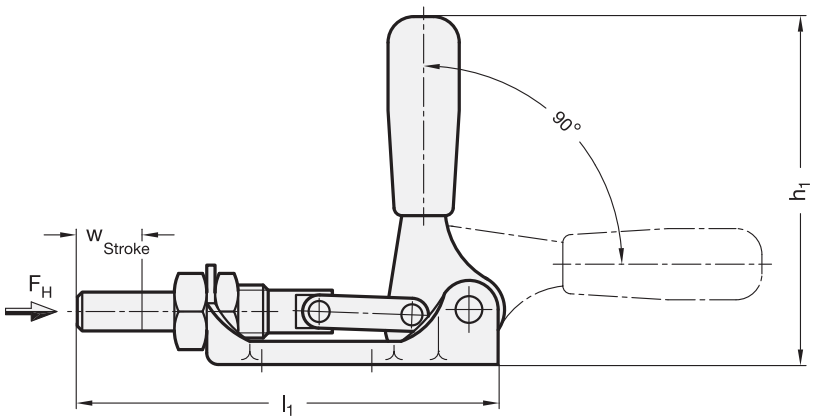

2 Type

AS Body sheet metal

1

Size	FH in N Holding force	a	b	d_1	d_2	d_3	h_1 ≈	h_2	l_1 ≈
120	3600	17	48	12	M 6	5,5	113	31	130
300	7200	20	58	14	M 8	6,5	140	36	167

Size	l_2 ≈	l_3 ≈	l_4 ≈	m_1	m_2	m_3	A/F	t	w Stroke
120	121	40	30	34	30	17	24	12	20
300	155	57	45	50	34	18	27	16	34

Specification

- Parts in sheet metal
  Case hardening steel C10
  zinc plated, blue passivated
- Plunger Steel St 37
  zinc plated, blue passivated
- Guide bushes Brass
  zinc plated, blue passivated
- all moving parts
  lubricated with special grease
- solid moulded plastic handle
  red, oil resistant
- RoHS compliant

Accessory

- Clamping bolts → *Page 765*

Information

see also...

- *General information to toggle clamps → Page 676*

How to order		
GN 841-120-AS (1 = 120, 2 = AS)	1	Size
	2	Type

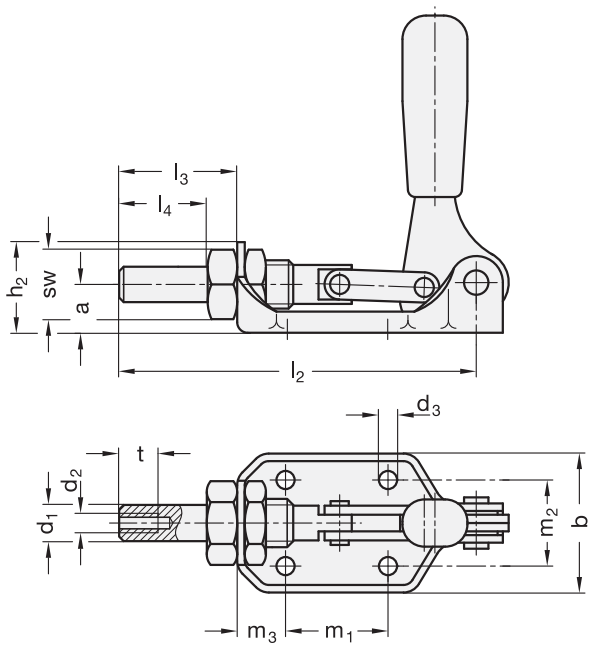
l3
l4
h2
sw
a
l2
d3
t
d2
d1
m2
b
m3
m1

Plunger clamps

for push-pull clamping

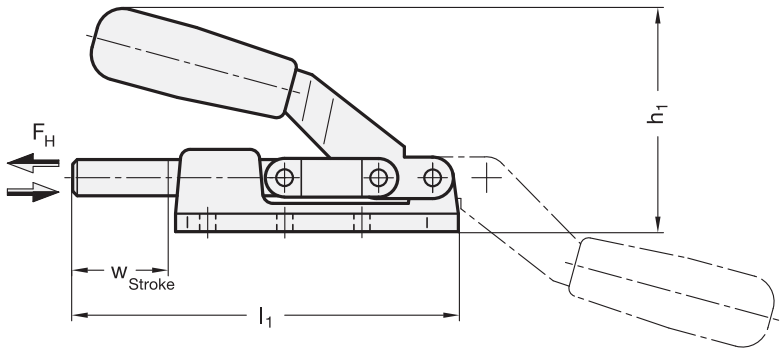

2 Type

AS Body
Brass / Steel, forged

1

Size	F_H in N Holding force	a	b_1	b_2	d_1	d_2	d_3	h_1 ≈	h_2 ≈	l_1
70	1200	12	64	36	8,5	M 6	4,3	42,5	19,5	86
160	2800	15	85	46	11	M 6	5,3	56	25	116
360	5600	25	90	45,5	12	M 8	5,5	75	34,5	122
550	8000	18	122,5	55	14	M 8	7	76	29,5	164,5
1100	16000	25	133	57	16	M 10	8,5	95	38	182
2100	25000	35	177	70	20	M 12	8,5	118,5	50	238
3100	45000	40	216	76	22	M 14	11	137	56	316

Size	l_2 ≈	l_3	m_1	m_2	m_3	m_4	s	t	w Stroke
70	79	22	26	13	26	-	6	12	20
160	107	31	33,5	11	36,5	-	10	12	30
360	114	32	33,5	30	36,5	-	7	15	32
550	154,5	42	41	15	35	41	7	16	42
1100	170,5	49	41	15	35	41	8	18	50
2100	222	61	50	35	50	50	10	22	60
3100	300	100	54	40	70	70	10	25	100

Specification

- Body
  Brass: Size 70 and 160
  Steel: Size 360 to 3100
  - forged
  - black lacquered
- Parts in sheet metal
  Case hardening steel C10
  zinc plated, blue passivated
- Plunger Steel St 37
  zinc plated, blue passivated
- Bearing pins (Bearing bush)
  case hardened
- RoHS compliant

Accessory

- Clamping bolts → *Page 765*

Information

Plunger clamps GN 842 can be used for very high holding forces thanks to their massive and sturdy body.

On the sizes 70 and 160 the fixing holes are countersunk to accept countersunk bolts with internal hexagon DIN 912-M5 or M6 respectively.

see also...

- *General information to toggle clamps → Page 676*

How to order		
GN 842-1100-AS (1 = Size, 2 = Type)	1	Size
	2	Type

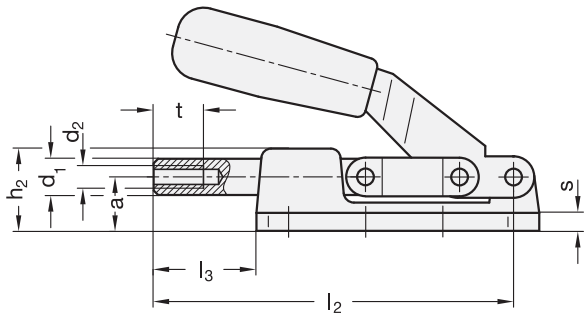
t
d2
d1
h2
a
s
l3
l2

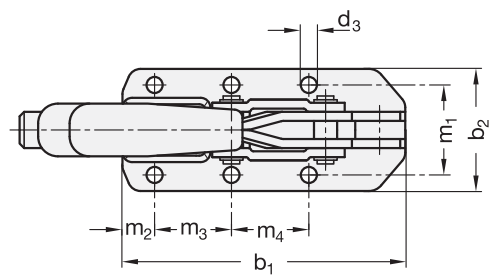
d3
m1
b2
m2
m3
m4
b1

Plunger clamps

for push-pull clamping

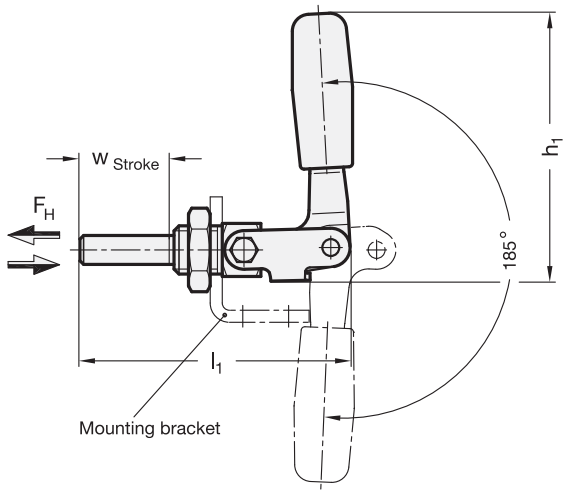

2 Type

AS without mounting bracket

ASW with mounting bracket

1

Size	F_H in N Holding force	a	b_1	b_2	d_1	d_2	d_3	d_4	h_1 ≈	h_2	h_3
80	3000	24	35	29	10	M 6	M 16 x 1,5	5,5	70,5	38,5	19
165	5400	32	60	35	12	M 8	M 20 x 1,5	6,5	110	50	22
340	7000	48	75	47,6	16	M 10	M 24 x 2	8,5	146	70	30

Size	l_1 ≈	l_2 ≈	l_3 ≈	l_4 ≈	l_5	m_1	m_2	m_3	s	t	w Stroke
80	71	65	34	22	22	20	12	-	4	12	21
165	112	104	54	39	41	41	13,5	19	5	15	38
340	173	162	85	68	59	55	19	25	5	18	66

Specification

- Steel
  Parts in sheet metal
  Case hardening steel C10
  zinc plated, blue passivated
- all moving parts
  lubricated with special grease
- solid moulded plastic handle sleeve
  red, oil resistant
- RoHS compliant

Accessory

- Clamping bolts → *Page 765*

Information

Plunger clamps GN 843.1 can be mounted on a mounting bracket (Type ASW) or directly on the jig.

The centre bush fixing method allows the operating handle to be turned into the most favourable position.

Plunger clamps GN 843.1 replace the standard GN 843.

see also...
- *General information to toggle clamps → Page 676*
- *Stainless Steel-Plunger clamps GN 843.1 → Page 722*

How to order		
GN 843.1-80-ASW (1 = 80, 2 = ASW)	1	Size
	2	Type

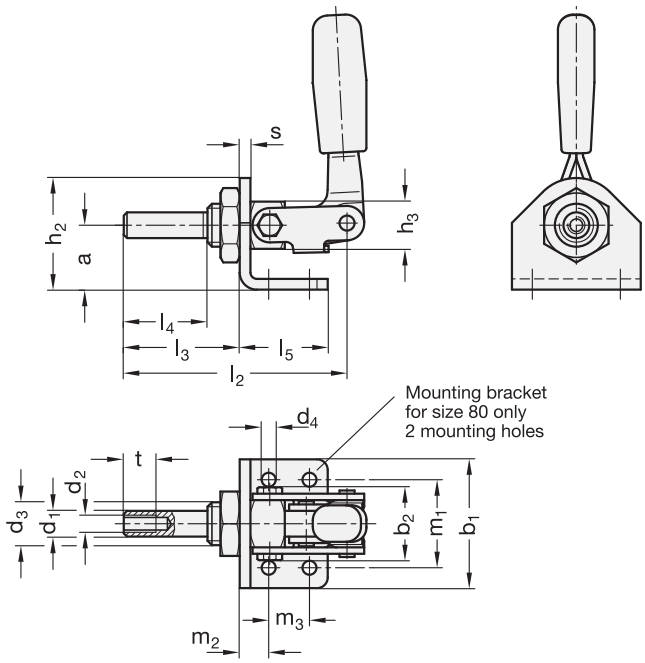
s
h2
a
h3
l4
l3
l5
l2
Mounting bracket
for size 80 only
2 mounting holes
d4
t
d2
d3
d1
b2
m1
b1
m3
m2

Stainless Steel-Plunger clamps

for push-pull clamping

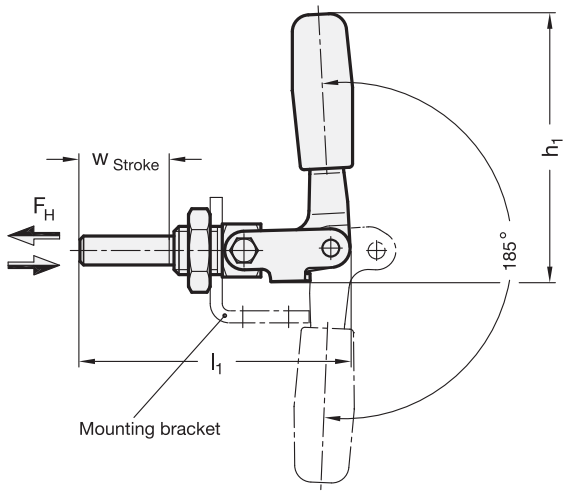

Rost frei Inox Stainless Steel

2 Type

AS without mounting bracket

ASW with mounting bracket

1

Size	F_H in N Holding force	a	b_1	b_2	d_1	d_2	d_3	d_4	h_1 ≈	h_2	h_3
80	3000	24	35	29	10	M 6	M 16 x 1,5	5,5	70,5	38,5	19
165	5400	32	60	35	12	M 8	M 20 x 1,5	6,5	110	50	22
340	7000	48	75	47,6	16	M 10	M 24 x 2	8,5	146	70	30

Size	l_1 ≈	l_2 ≈	l_3 ≈	l_4 ≈	l_5	m_1	m_2	m_3	s	t	w Stroke
80	71	65	34	22	22	20	12	-	4	12	21
165	112	104	54	39	41	41	13,5	19	5	15	38
340	173	162	85	68	59	55	19	25	5	18	66

Specification

3

- Stainless Steel **NI**
  - Parts in sheet metal AISI 304
  - other parts AISI 303
- all moving parts lubricated with special grease
- solid moulded plastic handle sleeve red, oil resistant
- *Stainless Steel characteristics → Page 1144*
- RoHS compliant

Accessory

- Clamping bolts → *Page 765*

Information

Stainless Steel-Plunger clamps GN 843.1 can be mounted on a mounting bracket (Type ASW) or directly on the jig.

The centre bush fixing method allows the operating handle to be turned into the most favourable position.

see also...

- *General information to toggle clamps → Page 676*
- *Plunger clamps GN 843.1 (Steel, zinc plated) → Page 720*

How to order

GN 843.1-80-ASW-NI (1 = Size, 2 = Type, 3 = Material)

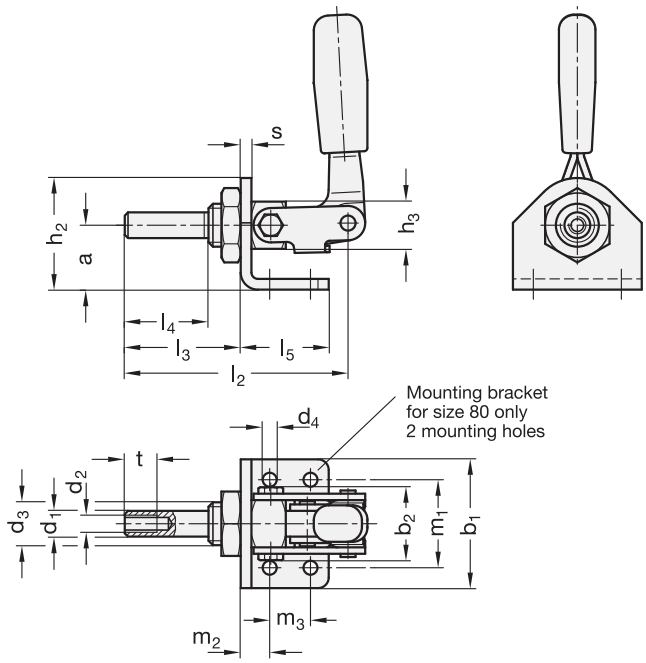
s
h2
a
h3
l4
l3
l5
l2
Mounting bracket
for size 80 only
2 mounting holes
d4
t
d2
d3
d1
b2
m1
b1
m3
m2

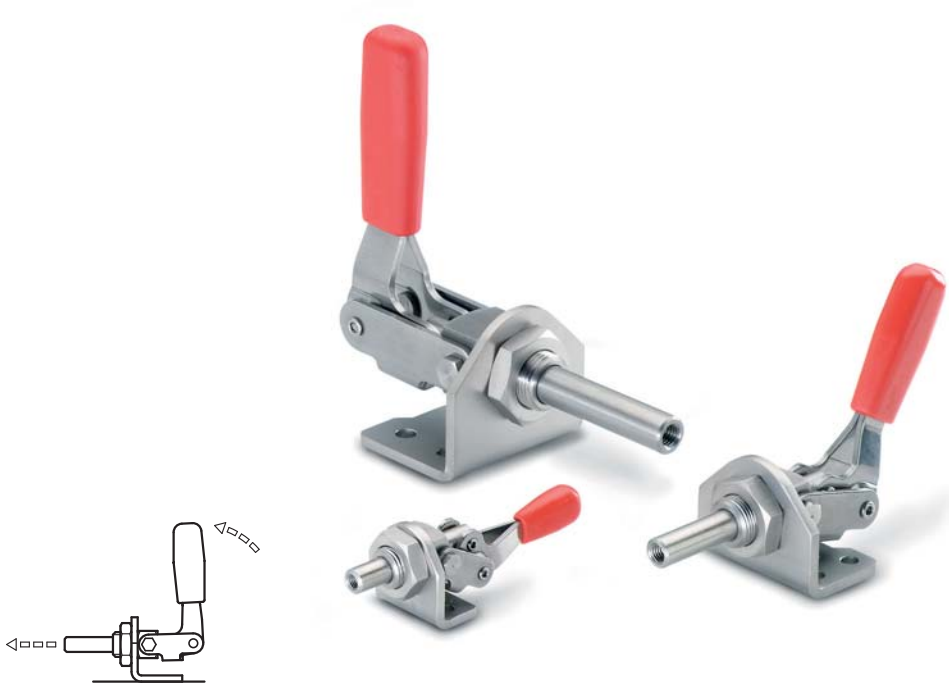

Hook clamps

with pulling action

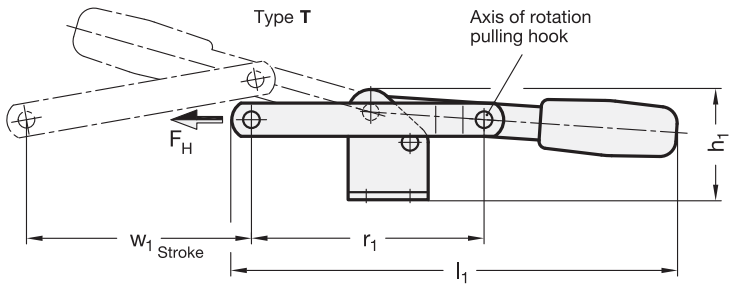

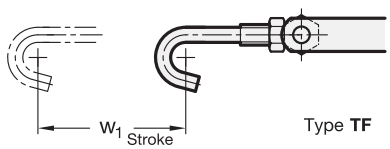

2 Type

T with pulling plunger
TF with pulling hook

1

Size	F_H in N Holding force	a_1	a_2	b_1	b_2	b_3	d_1	d_2	d_3	h_1 ≈	h_2
200	2000	37	29	35	45	18	10	8	6,5	49	16
300	3000	35	25	48	60	21	10	10	8,5	49	18
400	4000	43	30	54	84	26	14	12	10,5	60,5	25

Size	l_1 ≈	l_2 ≈	l_3 ≈	m_1	m_2	m_3	r_1 ≈	r_2	s	w_1 Stroke	w_2 ≈ Adjustable range
200	202	51	93	32	8	19	102	5	3	100	20
300	225	51	98	45	8	32	105	6	3	104	20
400	278	58	117,5	60	12,5	28,5	138	7	5	160	20

Specification

- Parts in sheet metal
  Case hardening steel C10
  zinc plated, blue passivated
- Pulling hook
  Steel St 37
  zinc plated, blue passivated
- all moving parts
  lubricated with special grease
- solid moulded plastic handle sleeve
  red, oil resistant
- RoHS compliant

Information

The pulling hook of the hook clamps GN 850 can be adjusted within the stroke.

see also...
- *General information to toggle clamps → Page 676*

How to order		
GN 850-300-TF (1 = Size, 2 = Type)	1	Size
	2	Type

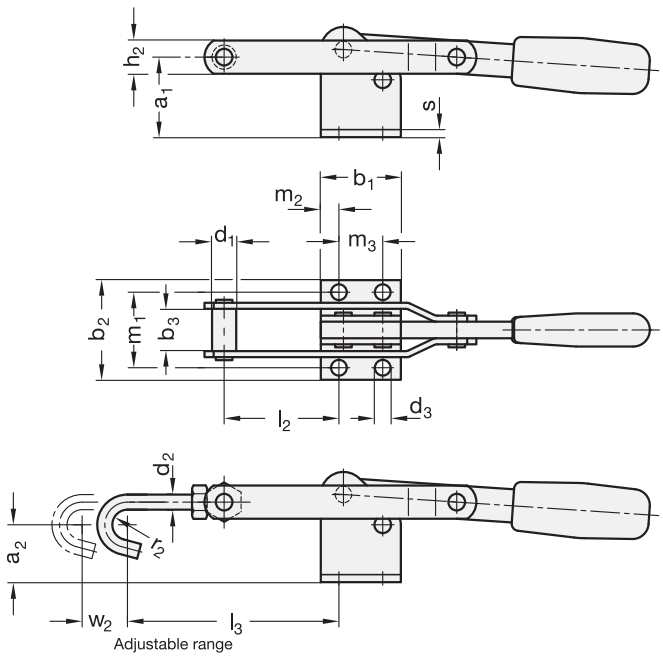
h2
a1
s
b1
m2
d1
m3
b2
m1
b3
l2
d3
d2
a2
w2
l3
Adjustable range

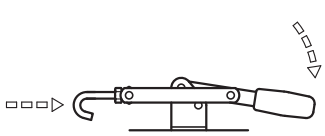

Latch clamps

with pulling action

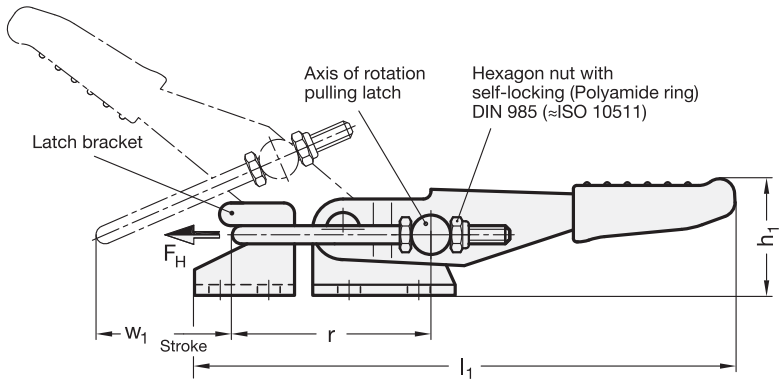

2 Type

T2 with pulling latch, with latch bracket

T without pulling latch, with latch bracket

1

Size	F_H in N Holding force	a	b_1	b_2	b_3	b_4	b_5	d_1	d_2	h_1 ≈	h_2
160	1600	12	26	28	21	20	14	M 4	4,3	26	18
320	3200	16	40	44	32	28	22	M 6	6,5	30	25
700	7000	24	60	54	38	38	26	M 8	8,5	42	36

Size	l_1 ≈	l_2 min.	m_1	m_2	m_3	m_4	m_5	r ≈ at $w_2 = 0$	s	w_1 Stroke	w_2 ≈ Adjustable range
160	98	11	19	5	16	5	10	37	2	25	11
320	152	19	32	10,5	19	7	14	54	3	48	13
700	220	23	38	9,5	41,5	9,5	19	70	3,5	58	26

Specification

- Parts in sheet metal
  Case hardening steel C10
  zinc plated, blue passivated
- Pulling latch
  Steel St 37
  zinc plated, blue passivated
- all moving parts
  lubricated with special grease
- Handle with plastic sleeve
  red, oil resistant
- RoHS compliant

Information

The stroke of the pulling latch of latch clamps GN 851 can be adjusted within its range.

In the clamped position the pulling latch with clamping arm is parallel to the plane of the operating handle.

Besides the standard dimensions of the pulling latch above, more versions are available under GN 951.1.

see also...
- *General information to toggle clamps → Page 676*
- *Stainless Steel-Latch clamps GN 851 → Page 728*
- *Pulling latch GN 951.1 → Page 740*

How to order		
GN 851-320-T2 (1 = Size, 2 = Type)	1	Size
	2	Type

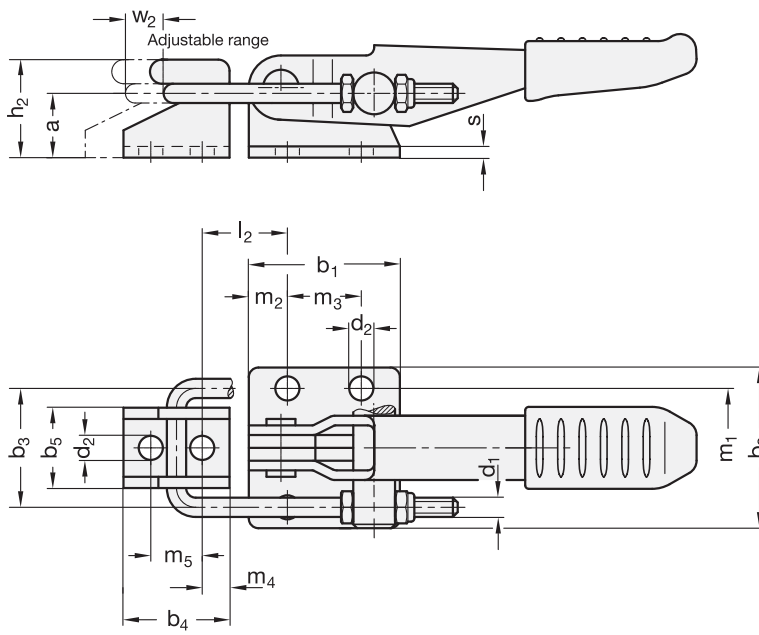
w2
Adjustable range
h2
a
s
l2
b1
m2
m3
d2
b3
b5
d2
d1
m1
b2
m5
m4
b4

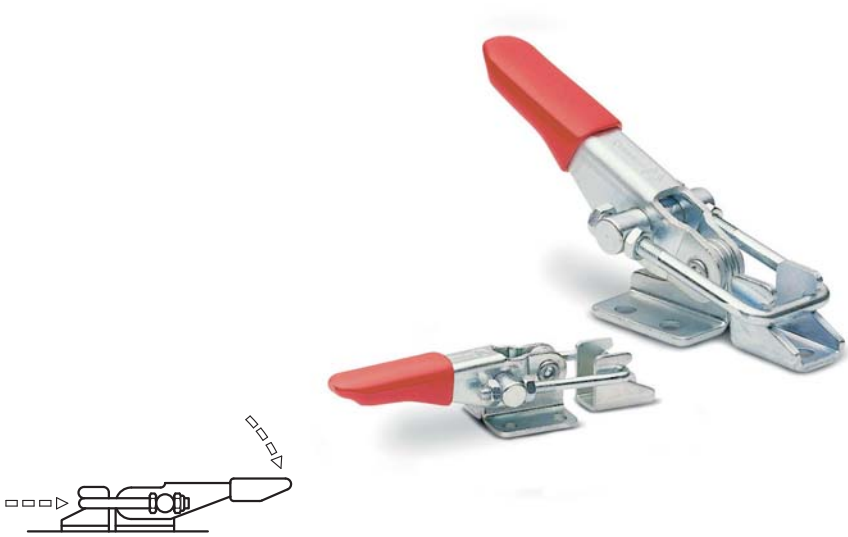

Stainless Steel-Latch clamps

with pulling action

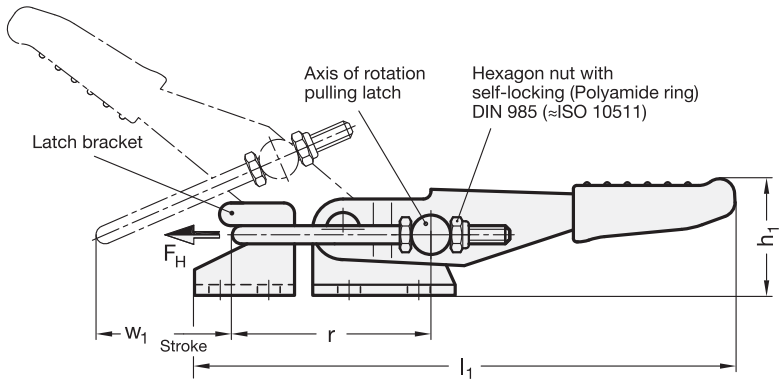

Rost frei Inox Stainless Steel

2 Type

T2 with pulling latch, with latch bracket

T without pulling latch, with latch bracket

1

Size	F_H in N Holding force	a	b_1	b_2	b_3	b_4	b_5	d_1	d_2	h_1 ≈	h_2
160	1600	12	26	28	21	20	14	M 4	4,3	26	18
320	3200	16	40	44	32	28	22	M 6	6,5	30	25
700	7000	24	60	54	38	38	26	M 8	8,5	42	37

Size	l_1 ≈	l_2 min.	m_1	m_2	m_3	m_4	m_5	r ≈ at $w_2 = 0$	s	w_1 Stroke	w_2 ≈ Adjustable range
160	98	11	19	5	16	5	10	37	2	25	11
320	152	19	32	10,5	19	7	14	54	3	48	13
700	220	23	38	9,5	41,5	9,5	19	70	3,5	58	26

Specification

3

- Sheet metal parts / Pulling latch
  Stainless Steel AISI 304 **NI**
- Pin
  Stainless Steel AISI 303
- all moving parts
  lubricatedwith special grease
- Handle with plastic sleeve
  red, oil resistant
- *Stainless Steel characteristics → Page 1144*
- RoHS compliant

Information

The stroke of the pulling latch of latch clamps GN 851 can be adjusted within its range.

In the clamped position the pulling latch with clamping arm is parallel to the plane of the operating handle.

Besides the standard dimensions of the pulling latch above, more versions are available under GN 951.1.

see also...

- *General information to toggle clamps → Page 676*
- *Latch clamps GN 851 (Steel, zinc plated) → Page 726*
- *Pulling latch GN 951.1 → Page 740*

How to order		
GN 851-160-T2-NI (1 2 3)	1	Size
	2	Type
	3	Material

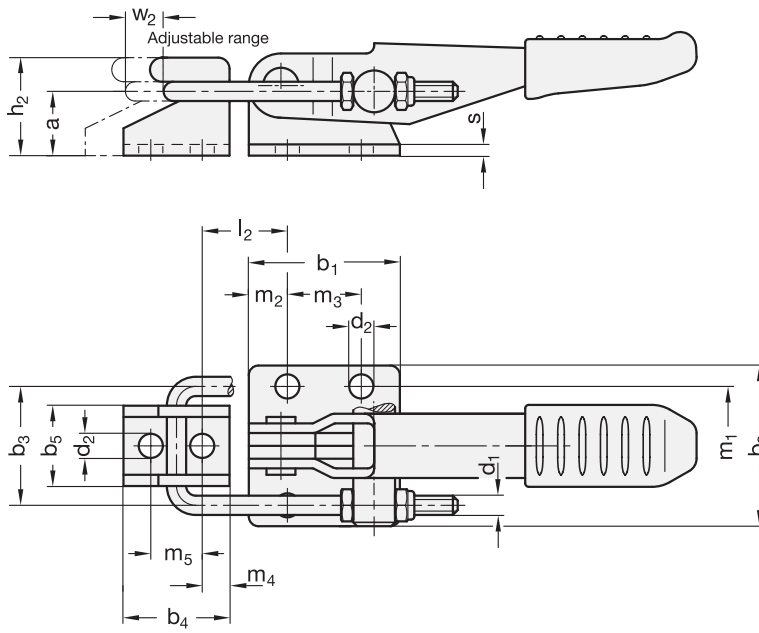
w2
Adjustable range
h2
a
s
l2
b1
m2
m3
d2
b3
b5
d2
d1
m1
b2
m5
m4
b4

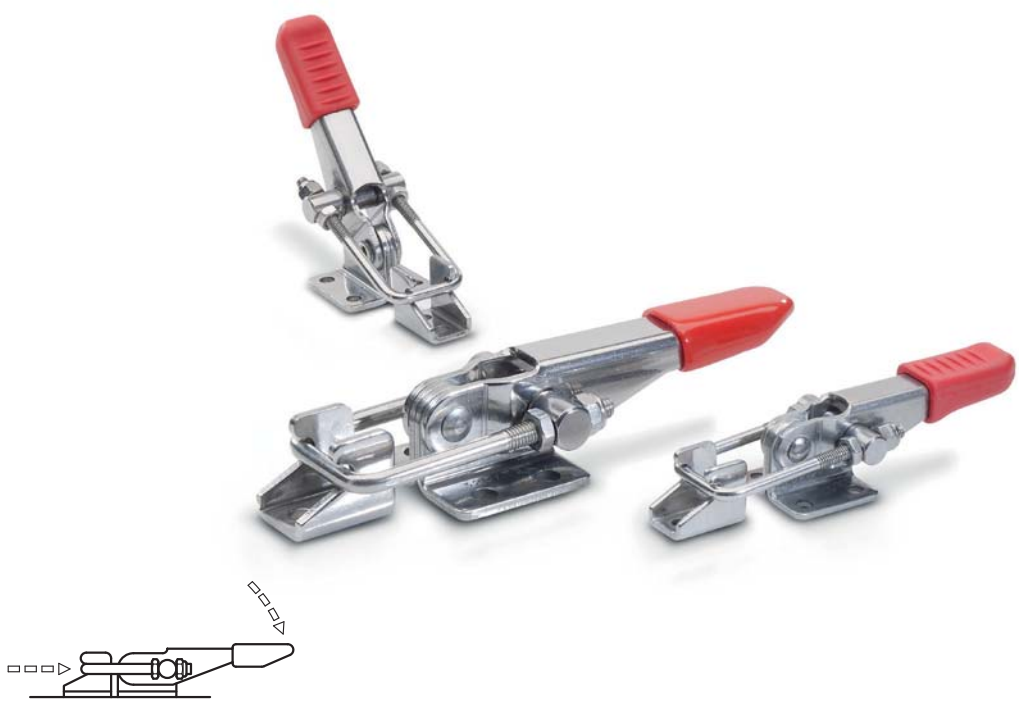

Latch clamps

with pulling action

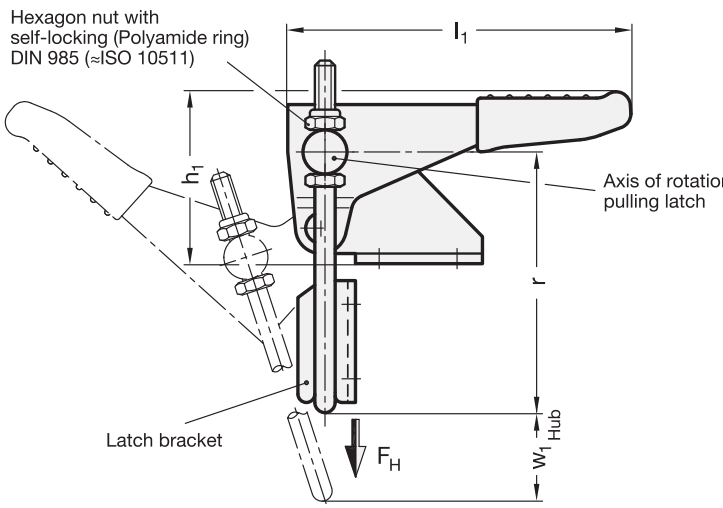

2 Type

T3 with pulling latch, with latch bracket

T without pulling latch, with latch bracket

1

Size	F_H in N Holding force	a	b_1	b_2	b_3	b_4	b_5	d_1	d_2	h_1	h_2
160	1600	5	26	35	21	25,5	14	M 4	4,3	37	10
320	3200	8	36	44	32	37	22	M 6	6,5	54	15
700	7000	13	52	54	38	48,5	26	M 8	8,5	67	23

Size	l_1 ≈	l_2 min.	m_1	m_2	m_3	m_4	m_5	r ≈ at $w_2 = 0$	s	w_1 Stroke	w_2 ≈ Adjustable range
160	68	4,5	22	6,5	13	6,7	14,3	50	2	32	12
320	106	6	25,5	8,5	19	10,5	20,5	78	3	53	21
700	147	8	36,5	10	32	13,5	27	98	3,5	64	30

Specification

- Parts in sheet metal
  Case hardening steel C10
  zinc plated, blue passivated
- Pulling latch
  Steel St 37
  zinc plated, blue passivated
- all moving parts
  lubricated with special grease
- Handle with plastic sleeve
  red, oil resistant
- RoHS compliant

Information

The stroke of the pulling latch of latch clamps GN 851.1 can be adjusted within its range.

In the clamped position the pulling latch with clamping arm is perpendicular to the clamping arm and the plane of the operating handle.

Besides the standard dimensions of the pulling latch above, more versions are available under GN 951.1.

see also...
- *General information to toggle clamps → Page 676*
- *Stainless Steel-Latch clamps GN 851.1 → Page 732*
- *Pulling latch GN 951.1 → Page 740*

How to order		
GN 851.1-700-T3 (1 = Size, 2 = Type)	1	Size
	2	Type

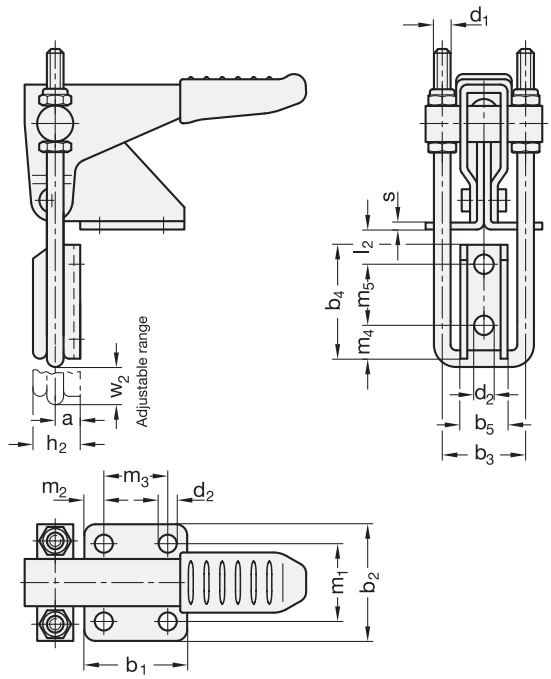
d1
s
l2
b4
m5
m4
d2
b5
b3
w2
Adjustable range
a
h2
m2
m3
d2
m1
b2
b1

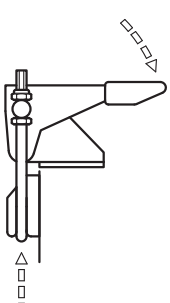

Stainless Steel-Latch clamps

with pulling action

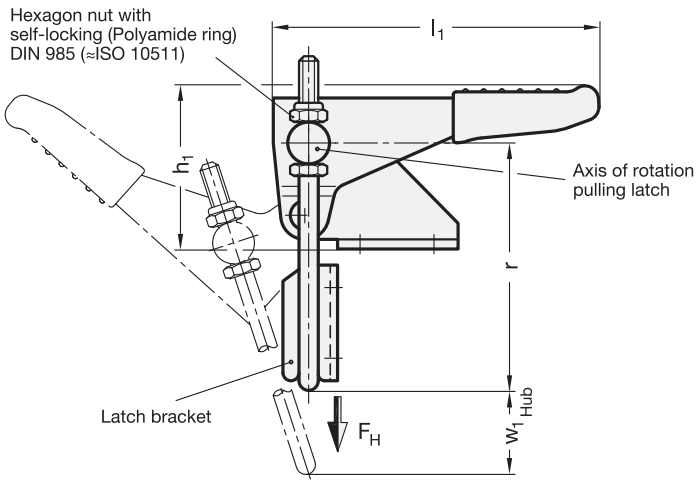

Rost frei Inox Stainless Steel

2 Type

T3 with pulling latch, with latch bracket

T without pulling latch, with latch bracket

1

Size	F_H in N Holding force	a	b_1	b_2	b_3	b_4	b_5	d_1	d_2	h_1 ≈	h_2
160	1600	5	26	35	21	25,5	14	M 4	4,3	37	10
320	3200	8	36	44	32	37	22	M 6	6,5	54	15
700	7000	13	52	54	38	48,5	26	M 8	8,5	67	23

Size	l_1 ≈	l_2 min.	m_1	m_2	m_3	m_4	m_5	r ≈ at $w_2 = 0$	s	w_1 Stroke	w_2 ≈ Adjustable range
160	68	4,5	22	6,5	13	6,5	14,3	50	2	32	12
320	106	6	9	8,5	19	10,5	20,5	78	3	53	21
700	147	8	36,5	10	32	13,5	27	98	3,5	64	30

Specification

3

- Sheet metal parts / Pulling latch
  Stainless Steel AISI 304 **NI**
- Pin
  Stainless Steel AISI 303
- all moving parts
  lubricated with special grease
- Handle with plastic sleeve
  red, oil resistant
- *Stainless Steel characteristics → Page 1144*
- RoHS compliant

Information

The stroke of the pulling latch of latch clamps GN 851.1 can be adjusted within its range.

In the clamped position the pulling latch with clamping arm is perpendicular to the clamping arm and the plane of the operating handle.

Besides the standard dimensions of the pulling latch above, more versions are available under GN 951.1.

see also...
- *General information to toggle clamps → Page 676*
- *Latch clamps GN 851.1 (Steel, zinc plated) → Page 730*
- *Pulling latch GN 951.1 → Page 740*

How to order		
GN 851.1-160-T3-NI (1 2 3)	1	Size
	2	Type
	3	Material

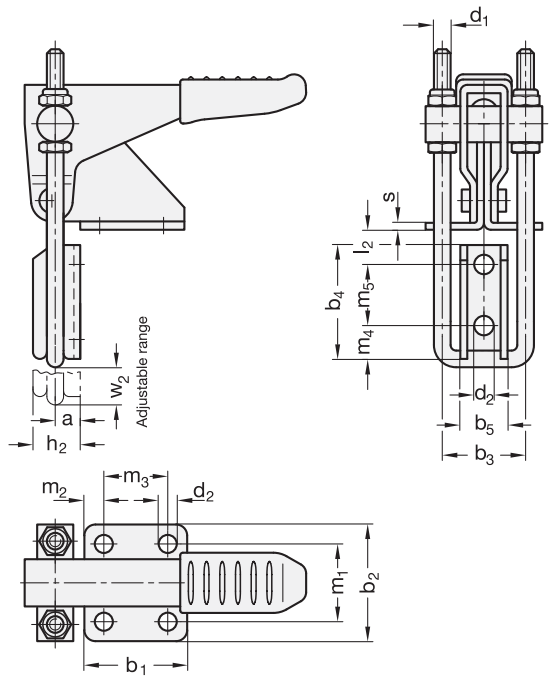
d1
s
l2
b4
m5
m4
d2
b5
b3
w2
Adjustable range
a
h2
m2
m3
d2
m1
b2
b1

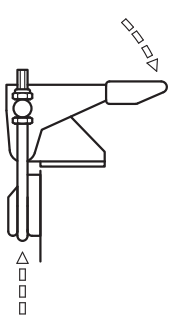

Latch clamps

with pulling action

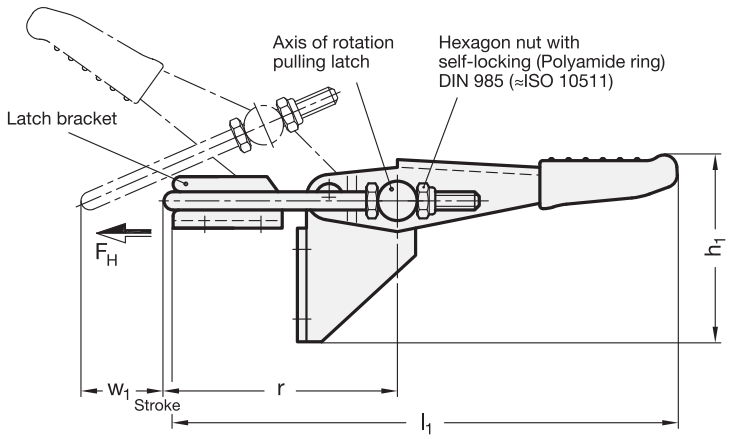

2 Type

T4 with pulling latch, with latch bracket

T without pulling latch, with latch bracket

1

Size	F_H in N Holding force	a	b_1	b_2	b_3	b_4	b_5	d_1	d_2	h_1 ≈	h_2
160	1600	5	26	35	21	25,5	14	M 4	4,3	40	10
320	3200	8	36	44	32	37	22	M 6	6,5	57,5	15
700	7000	13	52	54	38	48,5	26	M 8	8,5	82	23

Size	l_1 ≈	l_2 min.	m_1	m_2	m_3	m_4	m_5	r ≈ at w_2 = 0	s	w_1 Stroke	w_2 ≈ Adjustable range
160	99	4,5	22	6,5	13	6,5	14,3	50	2	32	12
320	132	6	25,5	8,5	19	10,5	20,5	78	3	53	21
700	225	8	36,5	10	32	13,5	27	98	3,5	64	30

Specification

- Parts in sheet metal
  Case hardening steel C10
  zinc plated, blue passivated
- Pulling latch
  Steel St 37
  zinc plated, blue passivated
- all moving parts
  lubricated with special grease
- Handle with plastic sleeve
  red, oil resistant
- RoHS compliant

Information

The pulling hook of the latch clamps GN 851.2 can be adjusted within the stroke.

In the clamped position the pulling latch and the clamping arm are horizontal to the vertical fixing plane.

Besides the standard dimensions of the pulling latch above, more versions are available under GN 951.1.

see also...
- *General information to toggle clamps → Page 676*
- *Pulling latch GN 951.1 → Page 740*

How to order		
GN 851.2-160-T4 (1 = 160, 2 = T4)	1	Size
	2	Type

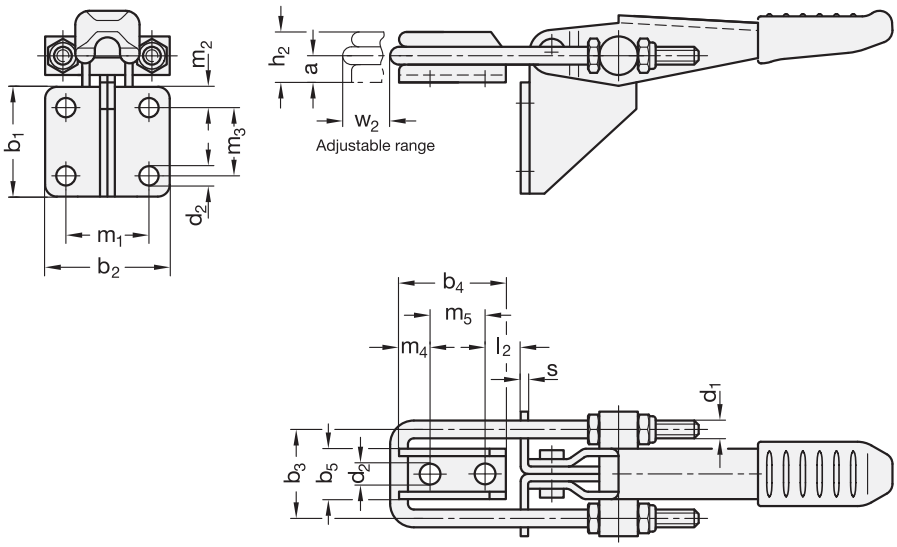
m2
b1
m3
d2
m1
b2
h2
a
w2
Adjustable range
b4
m5
m4
l2
s
d1
b3
b5
d2

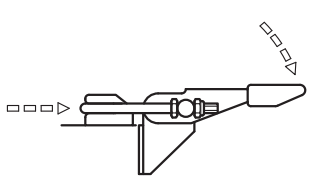

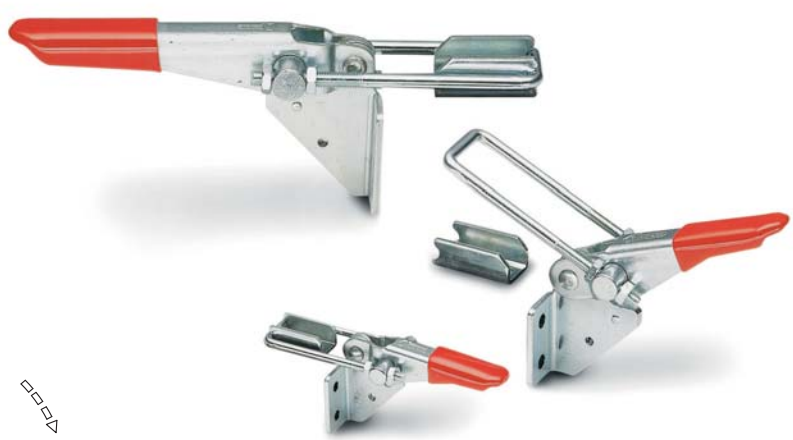

Latch clamps

heavy duty type

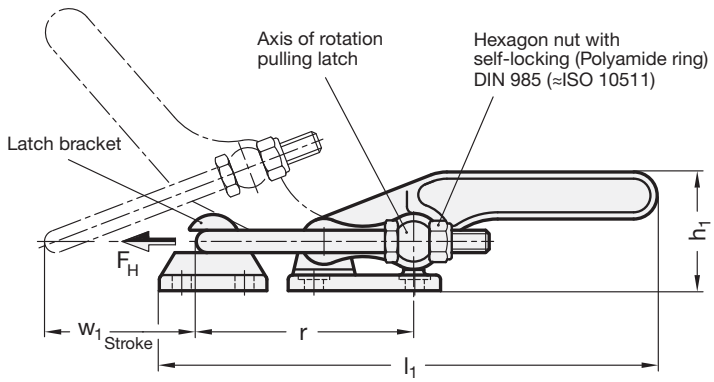

2 Type

- **T2** with fixing holes, with pulling latch, with latch bracket
- **T** with fixing holes, without pulling latch, with latch bracket
- **T2S** for welding, with pulling latch, with latch bracket
- **TS** for welding, without pulling latch, with latch bracket

1

Size	F_H in N Holding force	a_1	a_2	b_1	b_2	b_3	b_4	b_5	b_6	b_7	d_1	d_2	d_3	h_1 ≈	h_2
1400	17000	22	21	68	64	46	48	68	26,5	38	M 10	8,5	14	52	34,5
2800	40000	28	27	85	80	55	60	80	32	50	M 12	10,5	16	65	42,5

Size	l_1 ≈	l_2 min.	l_3 ≈	m_1	m_2	m_3	m_4	m_5	r ≈ at $w_2 = 0$	s_1	s_2	t	w_1 Stroke	w_2 ≈ Adjustable range
1400	218	29,5	129	45	11,5	45	10	28	96	7	9,2	2	63	15
2800	265	32,1	151	57	14	57	12,5	35	117	9	12,7	2	78	15

Specification

- Body / latch bracket
  Steel
  - forged
  - black lacquered (type T2)
  - blackened (type T2S)
- Operating handle
  Steel C40
  - forged
  - black lacquered
- Pulling latch / bearing pins
  Steel St 37
  zinc plated, blue passivated
- all moving parts
  lubricated with special grease
- RoHS compliant

On request

- Latch clamps with safety pawl

Information

The heavy duty latch clamps GN 852 are used for very high holding forces as may be encountered in the field of plastic high pressure mould forming.

The stroke of the pulling latch can be adjusted within its range.

Besides the standard dimensions of the pulling latch above, more versions are available under GN 951.2.

see also...
- *General information to toggle clamps → Page 676*
- *Stainless Steel-Latch clamps GN 852 → Page 736*
- *Latch clamps GN 852.1 (with locking mechanism) → Page 742*
- *Pulling latch GN 951.2 → Page 741*

How to order		
GN 852-2800-T2 (1 = Size, 2 = Type)	1	Size
	2	Type

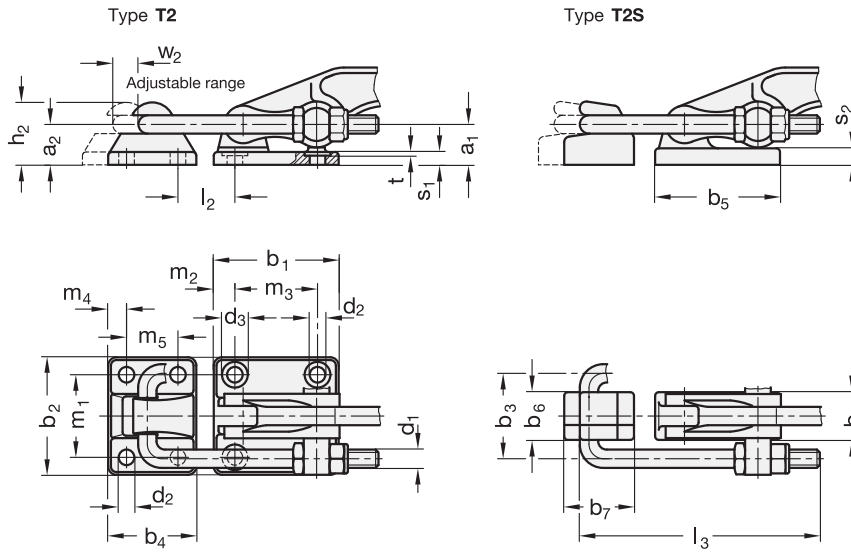
Type T2
Type T2S
w2
Adjustable range
h2
a2
a1
t
s1
l2
s2
b5
m2
b1
m3
m4
d3
d2
m5
b2
m1
d1
d2
b4
b3
b6
b6
b7
l3

Stainless Steel-Latch clamps

heavy duty type

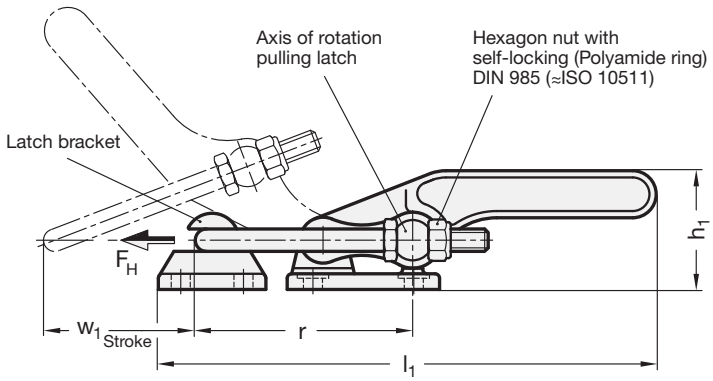

Rost frei Inox Stainless Steel

2 Type

T2 with fixing holes, with pulling latch, with latch bracket

T with fixing holes, without pulling latch, with latch bracket

T2S for welding, with pulling latch, with latch bracket

TS for welding, without pulling latch, with latch bracket

1

Size	F_H in N Holding force	a_1	a_2	b_1	b_2	b_3	b_4	b_5	b_6	b_7	d_1	d_2	d_3	h_1 ≈	h_2
1400	14000	22	21	68	64	46	48	68	26,5	38	M 10	8,5	14	52	34,5
2800	30000	28	27	85	80	55	60	80	32	50	M 12	10,5	16	65	42,5

Size	l_1 ≈	l_2 min.	l_3 ≈	m_1	m_2	m_3	m_4	m_5	r ≈ at $w_2 = 0$	s_1	s_2	t	w_1 Stroke	w_2 ≈ Adjustable range
1400	218	29	129	45	11,5	45	10	28	96	7	9,2	2	63	15
2800	265	29	151	57	14	57	12,5	35	117	9	12,7	2	78	15

Specification

3

- Body / latch bracket / operating handle / pulling latch Stainless Steel AISI 304 **NI**
- Other parts Stainless Steel AISI 303
- all moving parts lubricated with special grease
- *Stainless Steel characteristics → Page 1144*
- RoHS compliant

On request

- Latch clamps with safety pawl

Information

The heavy duty latch clamps GN 852 are used for very high holding forces as may be encountered in the field of plastic high pressure mould forming.

The stroke of the pulling latch can be adjusted within its range.

Besides the standard dimensions of the pulling latch above, more versions are available under GN 951.2.

see also...

- *General information to toggle clamps → Page 676*
- *Latch clamps GN 852 (Steel) → Page 736*
- *Pulling latch GN 951.2 → Page 741*

How to order

GN 852-2800-T2-NI (1 Size, 2 Type, 3 Material)

Type **T2**

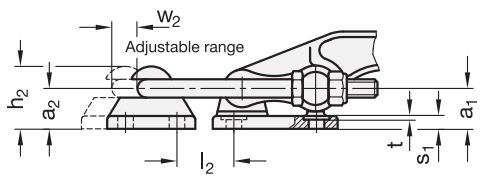

Type **T2S**

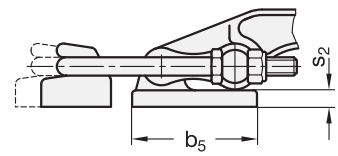

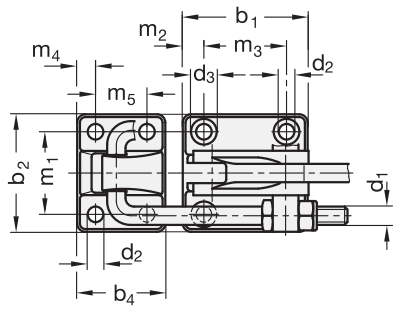

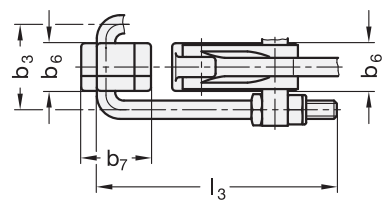

Pulling latches

for latch clamps GN 851 / GN 851.1 / GN 851.2

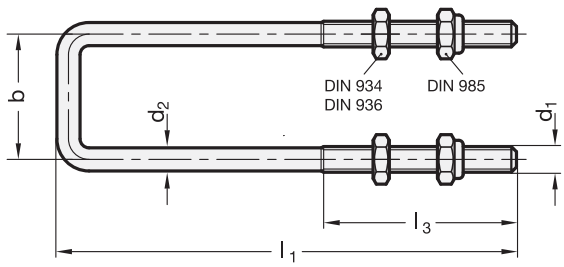

Rost frei — Inox Stainless Steel

1	2	3			GN 851 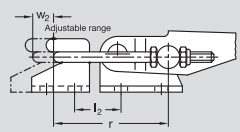				GN 851.1 GN 851.2 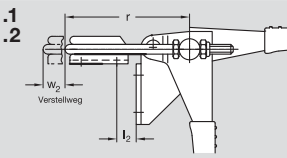			
d_1	b	l_1	d_2	l_3	Size	r for w_2=0	w_2	l_2 min.	Size	r for w_2=0	w_2	l_2 min.
M 4	21	56*	3,4	27,5	160	37	11	11	-	-	-	-
M 4	21	70**	3,4	28,5	160	50	12	24	160	50	12	4,5
M 4	21	103	3,4	30	160	82	14	55,5	160	82	14	36
M 4	21	153	3,4	35	160	127	19	100,5	160	127	19	81
M 4	21	203	3,4	35	160	177	19	150,5	160	177	19	131
M 6	32	78*	5,2	33	320	54	13	19	-	-	-	-
M 6	32	110**	5,2	44	320	75	24	40	320	78	21	6
M 6	32	130	5,2	45	320	94	25	59	320	94	25	25
M 6	32	155	5,2	45	320	119	25	84	320	119	25	50
M 6	32	205	5,2	45	320	169	25	134	320	169	25	100
M 8	39	111*	7,2	52	700	70	26	23	-	-	-	-
M 8	39	127	7,2	60	700	78	34	31	-	-	-	-
M 8	39	143**	7,2	56	700	98	30	51	700	98	30	8
M 8	39	157	7,2	60	700	108	34	61	700	108	34	18
M 8	39	207	7,2	60	700	158	34	111	700	158	34	68

* These pulling latch lengths are included in the delivery of standard designs of GN 851.
** These pulling latch lengths are included in the delivery of standard designs of GN 851.1 / GN 851.2.

Specification

4

- Steel — **ST**
  zinc plated, blue passivated
- Stainless Steel AISI 304 — **NI**
- Hexagon nuts (with Polyamide insert)
  M4: DIN 934 / DIN 985
  M6 / M8: DIN 936 / DIN 985
  Steel, zinc plated resp. Stainless Steel
- *Stainless Steel characteristics → Page 1144*
- RoHS compliant

Information

see also...

- *Latch clamps GN 851 → Page 726*
- *Stainless Steel-Latch clamps GN 851 → Page 728*
- *Latch clamps GN 851.1 → Page 730*
- *Stainless Steel-Latch clamps GN 851.1 → Page 732*
- *Latch clamps GN 851.2 → Page 734*

How to order

1 2 3 4
GN 951.1-M6-32-130-NI

1	d_1
2	b
3	l_1
4	Material

Pulling latches

for latch clamps GN 852

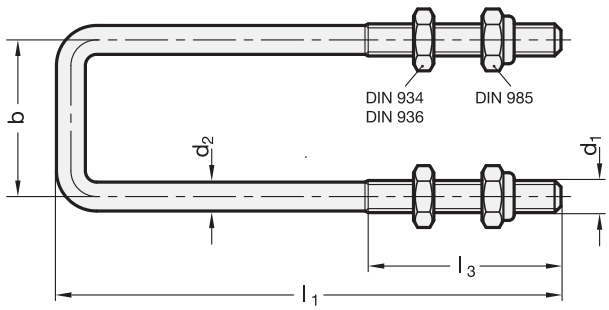

Rost frei Inox Stainless Steel

1 d_1	2 b	3 l_1	d_2	l_3	GN 852 Type T2 (with fixing holes)				GN 852 Type T2S (for welding)		
					Size	r for w_2=0	w_2	l_2 min.	Size	r for w_2=0	w_2
M 10	46	129*	9	45	1400	96	15	29	1400	96	15
M 10	46	179	9	45	1400	146	15	79	1400	146	15
M 10	46	209	9	45	1400	176	15	109	1400	176	15
M 10	46	259	9	45	1400	226	15	159	1400	226	15
M 12	55	151*	10,8	70	2800	117	15	29	2800	117	15
M 12	55	211	10,8	70	2800	156	36	68	2800	156	36
M 12	55	361	10,8	70	2800	306	36	218	2800	306	36
M 12	55	421	10,8	70	2800	366	36	278	2800	366	36

* These pulling latch lengths are included in the delivery of standard designs of GN 852.

Specification

4

- Steel zinc plated, blue passivated — ST
- Stainless Steel AISI 304 — NI
- Hexagon nuts (with Polyamide insert) DIN 936 / DIN 985 Steel, zinc plated resp. Stainless Steel
- *Stainless Steel characteristics → page 1144*
- RoHS compliant

Information

see also...

- *Latch clamps GN 852 → main catalogue page 736*
- *Stainless Steel-Latch clamps GN 852 → main catalogue page 738*

How to order

1 2 3 4
GN 951.2-M10-46-259-ST

1	d_1
2	b
3	l_1
4	Material

Latch clamps

with locking mechanism

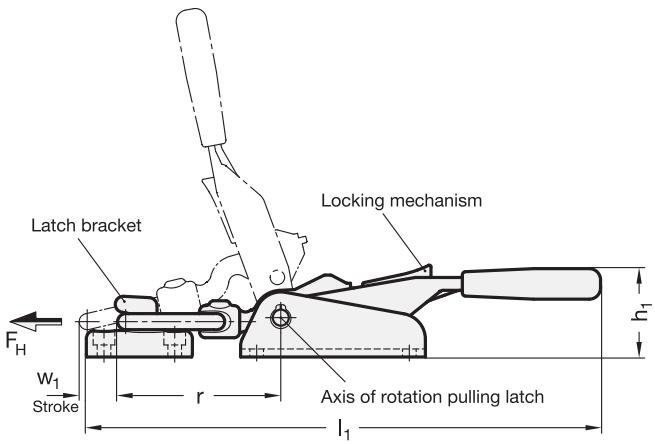

2 Type

T5 with fixing holes (d_2)

1

Size	F_H in N Holding force	a	b_1	b_2	b_3	b_4	d_1	d_2	h_1	h_2
1400	15000	22	115	51,5	66	22	10	8,5	57	38

Size	l_1 ≈	l_2 ≈ min.	m_1	m_2	m_3	m_4	r ≈ for $w_2 = 0$	s	w_1 Stroke	w_2 Adjustable range
1400	318	47	21	95	11	44	97,5	5	24	22

Specification

- Steel forged / Precsion die casting chemically blackened
- Bearing pins Steel hardened and ground
- all moving parts lubricated with special grease
- solid moulded plastic handle sleeve red, oil resistant
- RoHS compliant

Information

The latch clamp GN 852.1 is used when very high retaining forces occur.

The latch clamp also features a locking mechanism which prevents the inadvertent or vibration-induced opening of the clamp.

Another benefit is the option of operating the clamp with one hand.

Latch brackets are included.

How to order		
GN 852.1-1400-T5 (1 = Size, 2 = Type)	1	Size
	2	Type

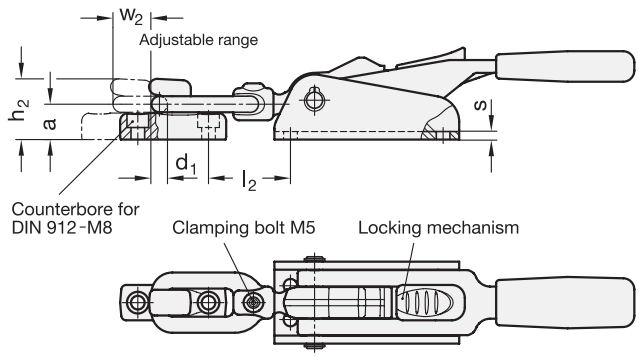

Dimensions of installation (Top view)

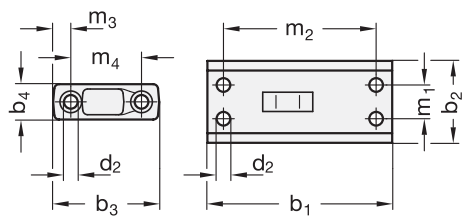

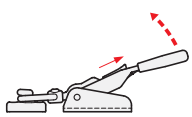

Description of function (for one-hand operation)

To **release**, move the locking mechanism in the direction of the arrow.

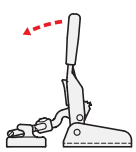

Lift the lever arm until the pulling latch is disengaged from the latch bracket.

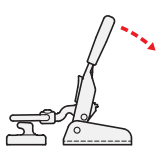

Moving the lever arm back will lift the pulling latch and release the latch bracket (one-hand operation).

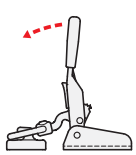

For **clamping**, lift the lever arm until the pulling latch rests against the latch bracket.

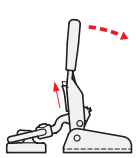

The pulling latch engages with the latch bracket if the locking mechanism is moved upward during clamping.

When clamping in the end position, the mechanism locks automatically through spring tension.

Latch clamps

with locking mechanism

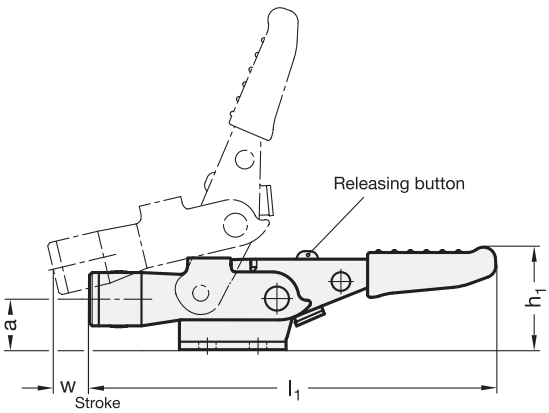

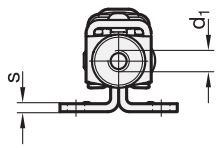

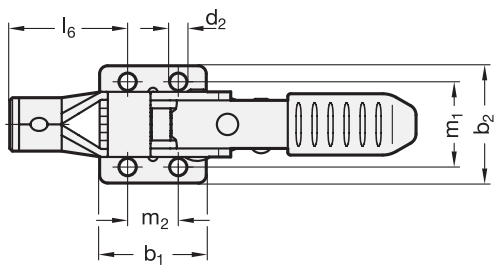

Patent pending

2 Type

T5 without tie-rod, without latch bracket

TG with tie-rod, with latch bracket, tie-rod with drawbar eye

TT with tie-rod, with latch bracket, tie-rod with T-piece

TU with tie-rod, with latch bracket, tie-rod with hook

1

Size	FH in N Holding force	a	b_1	b_2	b_3	b_4	b_5	b_6	b_7	d_1	d_2	d_3	d_4	d_5	h_1 ≈
160	1750	13	26	28	23	14	26	35	6,8	M 6	4,5	4,5	5,2	6	27
320	4000	19	40	44	34	18	35	38	10	M 8	6,7	6,7	7	8	38,5
700	7500	28	60	54	41	26	50	50	11	M 10	8,5	8,5	9	10	53

Size	h_2	h_3	l_1 ≈	l_2 ≈ Type TG	l_3 ≈ Type TT	l_4 ≈ Type TU	l_5	l_6	m_1	m_2	m_3	m_4	m_5	s	w Stroke
160	20	20,5	103	55	55	54	28	30	19	16	16	14,3	25,4	2	8
320	30	28	153	76,5	76,5	76,5	34	44,5	32	19	19	22,3	25,4	3	13
700	40,5	39	222	95,5	93	92	42	51	38	41,5	31	25,4	31	3,5	19

Specification

- Parts in sheet metal
  Toughened steel C10
  blackened
- Tie-rod
  Steel St 32
  blackened
- all moving parts
  lubricated with special grease
- Solid moulded plastic handle sleeve
  red, oil resistant
- RoHS compliant

Information

Latch clamps GN 853 feature a locking mechanism which prevents an inadvertent or vibration-induced opening of the clamp.

Another benefit is the option of operating the clamp with one hand.

How to order		
GN 853-320-TT (1 = Size, 2 = Type)	1	Size
	2	Type

Type **TG**
Tie-rod with drawbar eye

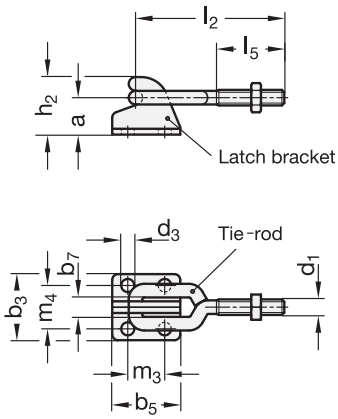

Type **TT**
Tie-rod with T-piece

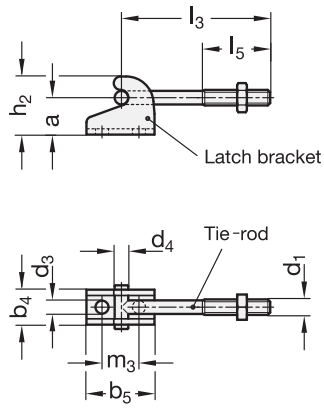

Type **TU**
Tie-rod with hook

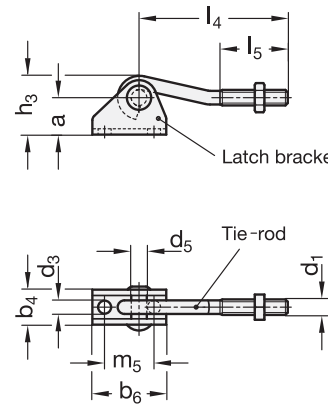

Description of function (for one-hand operation)

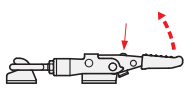

Press the release button for **releasing**.

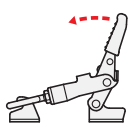

Lift the clamping arm until the tie-rod disengages from the latch bracket.

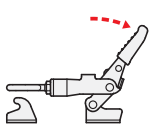

Retracting the clamping arm will lift the tie-rod and release the latch bracket (one-hand operation).

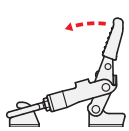

For **clamping operation**, lift the clamping arm until it rests on the latch bracket.

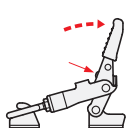

The clamping arm engages in the latch bracket if the releasing button is pressed for the clamping operation.

When clamping in the end position, the system locks automatically by spring force.

Stainless Steel-Latch clamps

with locking mechanism

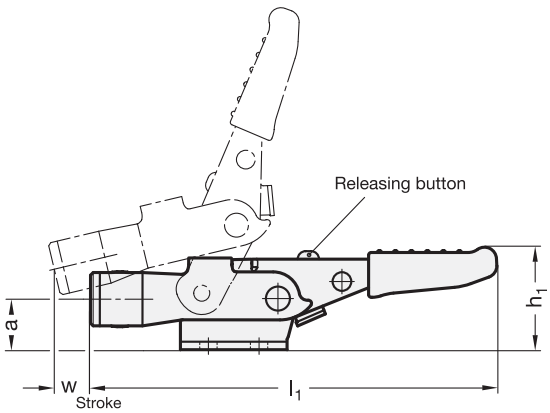

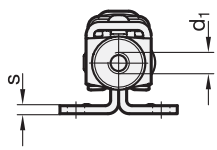

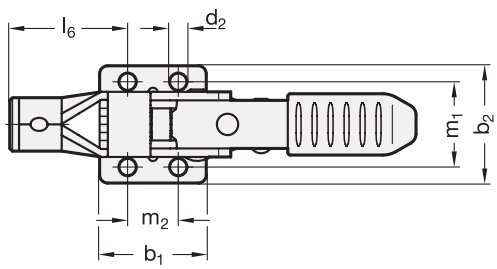

Rost frei Inox Stainless Steel

Patent pending

2 Type

T5 without tie-rod, without latch bracket

TG with tie-rod, with latch bracket, tie-rod with drawbar eye

TT with tie-rod, with latch bracket, tie-rod with T-piece

TU with tie-rod, with latch bracket, tie-rod with hook

1

Size	FH in N Holding force	a	b_1	b_2	b_3	b_4	b_5	b_6	b_7	d_1	d_2	d_3	d_4	d_5	h_1 ≈
160	1750	13	26	28	23	14	26	35	6,8	M 6	4,5	4,5	5,2	6	27
320	4000	19	40	44	34	18	35	38	10	M 8	6,7	6,7	7	8	38,5
700	7500	28	60	54	41	26	50	50	11	M 10	8,5	8,5	9	10	53

Size	h_2	h_3	l_1 ≈	l_2 ≈ Type TG	l_3 ≈ Type TT	l_4 ≈ Type TU	l_5	l_6	m_1	m_2	m_3	m_4	m_5	s	w Stroke
160	20	20,5	103	55	55	54	28	30	19	16	16	14,3	25,4	2	8
320	30	28	153	76,5	76,5	76,5	34	44,5	32	19	19	22,3	25,4	3	13
700	40,5	39	222	95,5	93	92	42	51	38	41,5	31	25,4	31	3,5	19

Specification

3

- Parts in sheet metal
  Stainless Steel AISI 304 **NI**
- Tie-rod
  Stainless Steel AISI 304
- all moving parts
  lubricated with special grease
- Solid moulded plastic handle sleeve
  red, oil resistant
- *Plastic characteristics → Page 1141*
- RoHS compliant

Information

Stainless Steel-Latch clamps GN 853 feature a locking mechanism which prevents an inadvertent or vibration-induced opening of the clamp.

Another benefit is the option of operating the clamp with one hand.

How to order

1 2 3

GN 853-320-T5-NI

1	Size
2	Type
3	Material

Type **TG**
Tie-rod with drawbar eye

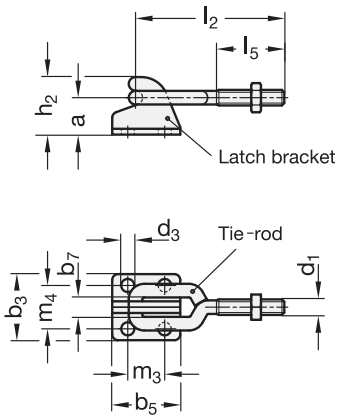

Type **TT**
Tie-rod with T-piece

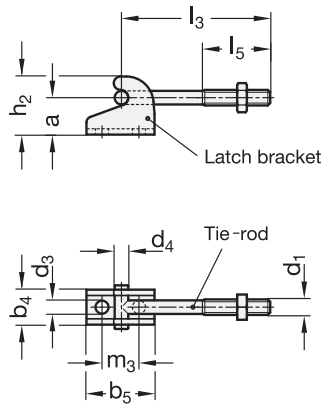

Type **TU**
Tie-rod with hook

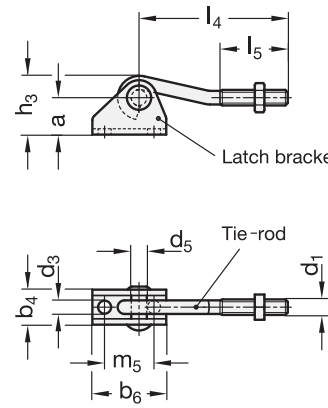

Description of function (for one-hand operation)

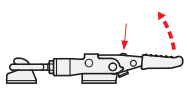

Press the release button for **releasing**.

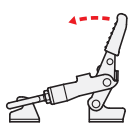

Lift the clamping arm until the tie-rod disengages from the latch bracket.

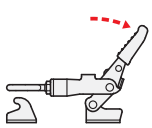

Retracting the clamping arm will lift the tie-rod and release the latch bracket (one-hand operation).

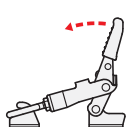

For **clamping operation**, lift the clamping arm until it rests on the latch bracket.

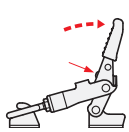

The clamping arm engages in the latch bracket if the releasing button is pressed for the clamping operation.

When clamping in the end position, the system locks automatically by spring force.

Latch clamps

with trigger function

Coding **1**

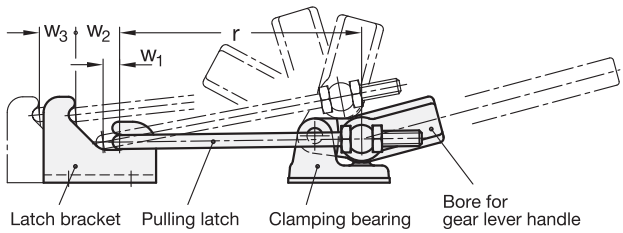

2 Coding

1 with bore
2 with clamping arm

3 Type

T2S for welding

Coding **2**

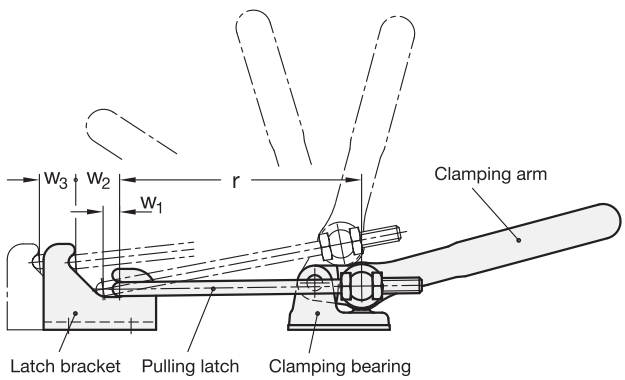

1

Size	F_H in N Holding force	a_1	a_2	b_1	b_2	b_3	b_4	b_5	b_6	d_1	d_2	d_3	h_1 ≈ Coding 1	Coding 2
1500	13000	26	28	65	43	52	70	72	30	M 10	8,5	18	55	81

Size	h_2	l_1 ≈ Coding 1	Coding 2	l_2 min.	m_1	m_2	r	t	w_1	w_2	w_3 ≈ Trigger stroke	w_4 ≈ Adjustable range
1500	55	220	334	186	40	16	120	30	10,5	28	25	40

Specification

- Clamping bearing / Clamping arm
  Steel
  - forged
  - weldable
  - blank
- Pulling latch / Bearing pins
  Steel St 37
  blank
- Latch bracket
  Sheet metal steel
  blank
- RoHS compliant

Information

The outstanding feature of GN 854 latch clamps is their highly robust, sturdy and compact design, allowing their use under demanding conditions, e.g. exposure to high temperatures, dust, spray mist, etc.

The specially designed latch bracket allows the forced loosening of the clamping by the clamping arm moving the pulling latch forward, e.g. for separating mould halves.

Latch clamps with bore (coding 1) are operated with a gear lever handle which is plugged into the latch and pulled off after operation. This saves space and has the added advantage that the gear lever handle is not exposed to adverse ambient conditions, e.g. turning too hot to operate. The gear lever handle is not included in the delivery.

The latch bracket can also be attached using screws or bolts.

If required, clamping elements and pulling latches are also available as separate parts; for replacement, the bearing bolt is easily dismantled.

How to order		
GN 854-1500-1-T2S (1 2 3)	1	Size
	2	Coding
	3	Type

Coding **1**

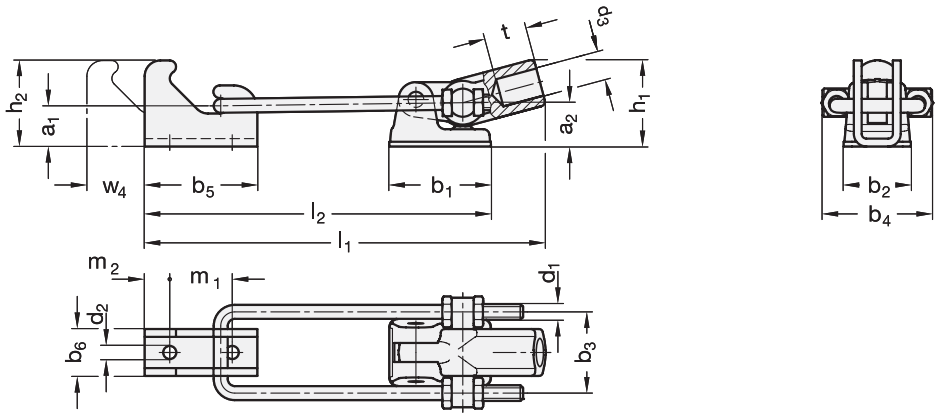

Coding **2**

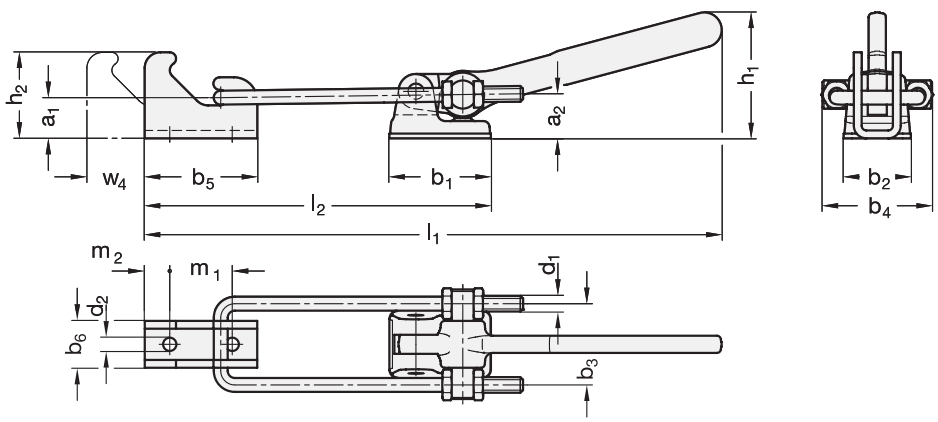

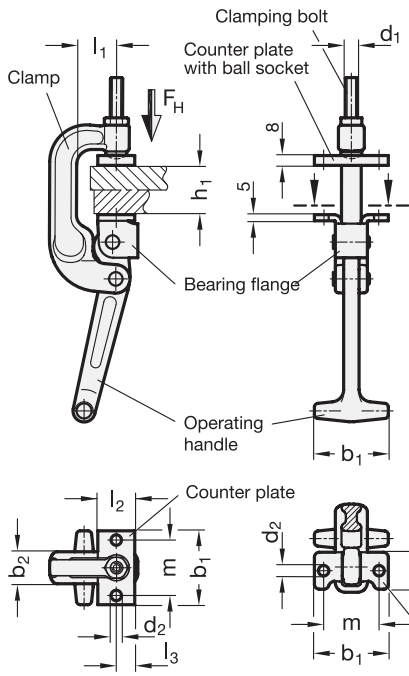

Examples of application

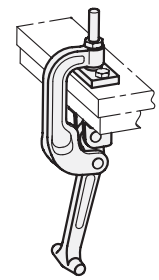

Clamping bolt GN 802

3 Type

C2 for screwing

1 h_1 max.	2 l_1	F_H in N Holding Force	b_1	b_2	d_1	d_2	h_2	h_3	h_4	l_2	l_3	l_4	l_5	l_6	m	w_1 Stroke	w_2 Adjustable range
40	32	15000	60	26	M 10	8,5	111	168	129	30	18	72	168	173	45	19	32
75	32	15000	60	26	M 10	8,5	146	168	164	30	18	72	168	207	45	19	32

Specification

- Clamp / Operating handle
  Steel
  - forged
  - blackened
- Bearing flange
  Sheet steel, blackened
- Clamping bolt / Nut
  Steel, blackened
- Counter plate / Bearing pin
  Steel, blackened
- RoHS compliant

Information

C-Clamps GN 855 feature an especially robust, sturdy and compact design, allowing them to be used under severe and demanding conditions, e.g. higher temperatures, dust, mist, etc.

The C-Clamps are normally installed and fixed at the clamping point. The counter plate supplied loose has a ball socket and is designed for attaching to the counter piece to be clamped. In connection with the ball-type bolt, this configuration ensure the precise positioning of the latch clamp.

If the counter plate is not to remain at the counter piece to be clamped, the clamping bracket may alternatively also be used to hold GN 802 clamping bolts which have a pendulum-type bearing surface.

see also...
- *Clamping bolts GN 802 → Page 767*
- *Grub screws DIN 6332 → Page 592*
- *Thrust pads GN 6311.1 → Page 595*

How to order		
1 2 3	1	**Clamp width**
GN 855-40-32-C2	2	**Clamping height**
	3	**Type**

C-Clamp, tensioned

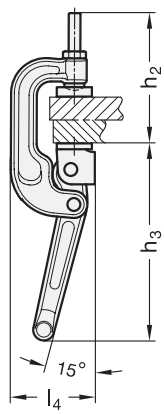

C-Clamp, loosened

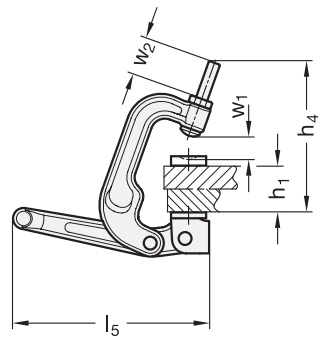

C-Clamp, opened

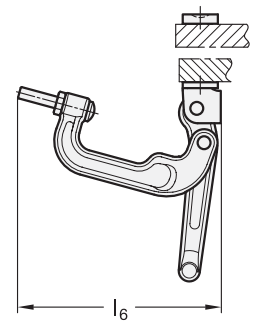

Description of function

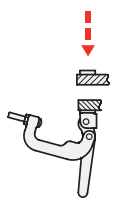

Place the pieces to be clamped into the clamping position, e.g. close the lid or place the piece to be clamped on top.

Then move the clamping bracket and the operating handle of the C-Clamp upwards.

Now move the clamping bracket forward such that the clamping bolt is located in the ball socket of the counter plate.

Move the operating handle downwards until the clamping force has exceeded the dead point.

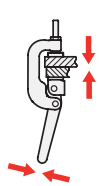

When closed, the C-Clamp now holds its position on its own.

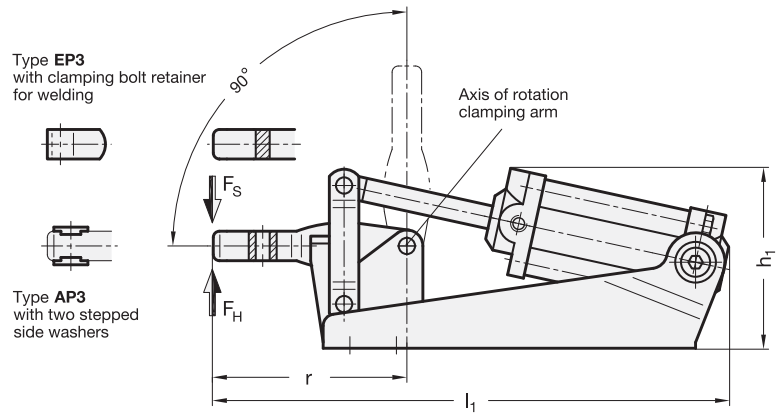

2 Type

AP3 forked clamping arm
EP3 solid clamping arm

3 Coding

M Magnetic piston from size 200

1

Size	F_H in N Holding force	F_S in N Clamping force at 4 bar ≈	a ≈	b_1	b_2	d_1	d_2	d_3	Female thread-Ø for hose	h_1	h_2
70	700	500	20	42	5,5	M 5	4,5	G⅛	4	51	21
125	1600	700	28	47,5	6,5	M 6	5,5	G⅛	4	70,5	30
200	2200	900	40	53	8,5	M 8	6,5	G⅛	4	79	36
300	2700	1200	42	74	10,5	M 10	8,5	G¼	6	98	48
400	3000	1400	66	74	12,5	M 12	8,5	G¼	8	107,5	51

Size	h_3	h_4	l_1 ≈	l_2 ≈	l_3 ≈	l_4 max.	m_1	m_2	m_3	r ≈	s
70	11	21	163	92	40	48	24	7	15	62,5	4
125	14	27	200,5	150	48	62	29	8	19	79	5
200	18	35	247	160	70	86	32	11	20	104	6
300	20	41	305	195,5	76	95	46	10	29	122	8
400	22	48	361	216	104	130	45	10	32	156	10

Specification

- Parts in sheet metal
  Case hardening steel C10
  zinc plated, blue passivated
- Bearing pins tempered
- Bearing bush (from size 200)
  case hardened
- Bearing pins for cylinder
  case hardened
- double acting cylinder
  max. pressure 6 bar
- all moving parts
  lubricated with special grease
- RoHS compliant

Accessory

- Clamping bolts → *Page 765*
- Holders for clamping bolts GN 809
  (for type EP3) → *Page 770*
- Holders for clamping bolts GN 801
  (for type AP3) → *Page 771*
- Proximity switch with mounting bracket
  GN 896.1 / GN 896.2 → *Page 764*

Information

The clamping principle of pneumatically operated clamps GN 860 is identical in construction and dimensions to the manually operated vertical clamps GN 810.

To ensure an extended life of the mechanical parts as well as the air cylinders the operating pressure should not exceed 6 bar. In addition a lubro control unit should be fitted in the air line.

Pneumatically operated clamps GN 860 are also available as from size 200 as a version M (magnetic piston). In conjunction with proximity switches GN 896.1 / GN 896.2 the piston position can be sensed and the generated impulse can be used to transmit an electrical signal.

see also...
- *More information to pneumatically operated clamps → Page 677*

Pneumatically operated clamps		
GN 860-200-AP3 (1 = 200, 2 = AP3)	1	Size
	2	Type

Pneumatically operated clamps with magnetic piston		
GN 860-300-AP3-M (1 = 300, 2 = AP3, 3 = M)	1	Size
	2	Type
	3	Coding

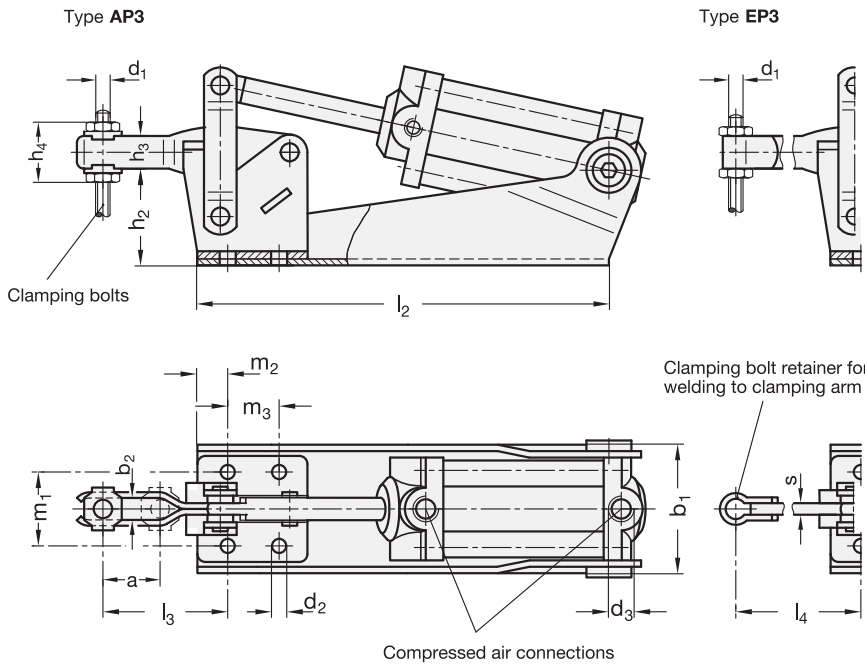
Type AP3
Type EP3
d1
h4
h3
h2
Clamping bolts
l2
m2
m3
Clamping bolt retainer for welding to clamping arm
b2
m1
b1
s
a
l3
d2
d3
l4
Compressed air connections

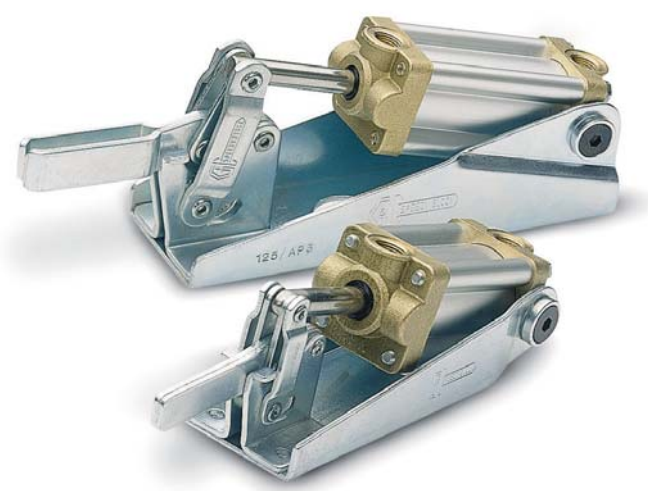

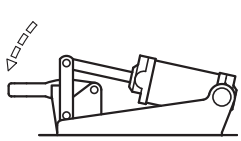

Pneumatically operated clamps

heavy duty type

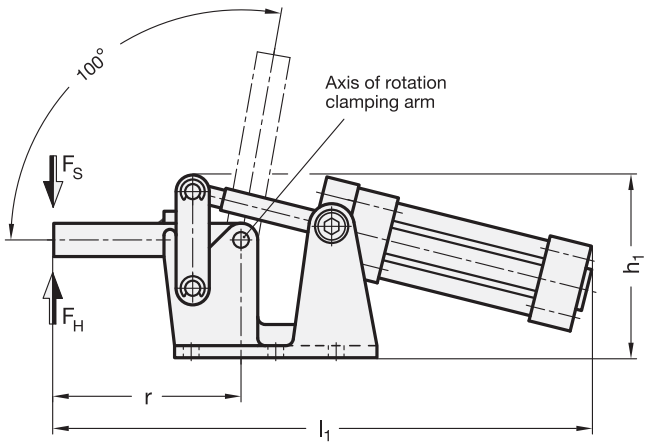

2 Type

EP solid clamping arm

3 Coding

M Magnetic piston

1

Size	F_H in N Holding force	F_S in N Clamping force at 6 bar ≈	b_1	b_2	b_3	d_1	d_2	Female thread-Ø for hose	h_1 ≈	h_2
1000	10000	3200	102	90	20	10,5	G1/4	8	145	80
2000	20000	3800	112	100	20	10,5	G3/8	10	171,5	90

Size	h_3	l_1 ≈	l_2 ≈	l_3 ≈	m_1	m_2	m_3	m_4	r ≈	s
1000	25	410	90	155	65	12,5	65	48	140	13
2000	35	487	113	176	70	15	70	56	172	13

Specification

- Body
  cast steel
  black lacquered
- other parts
  Steel St 60
  zinc plated, blue passivated
- Bearing pins
  case hardened
- double acting cylinder
  with adjustable cushioning
  max. pressure 6 bar
- all moving parts
  lubricated with special grease
- RoHS compliant

Accessory

- Proximity switch with mounting bracket GN 896.3 → *Page 764*

Information

Pneumatically operated clamps GN 861 have been constructed in such a way as to make them easily demountable. The bearing pins are axially fixed with circlips. This allows the clamping arm to be modified to suit any particular application.

To ensure an extended life of the mechanical parts as well as the air cylinder the operating pressure should not exceed 6 bar. In addition a lubro control unit should be fitted in the air line.

Pneumatically operated clamps GN 861 are also available as version M (magnetic piston). In conjunction with a proximity switch GN 896.3 the piston position is sensed and the generated signal can be used in sequence control systems.

see also...

- *More information to pneumatically operated clamps → Page 677*

How to order		
GN 861-1000-EP-M (1 2 3)	1	Size
	2	Type
	3	Coding

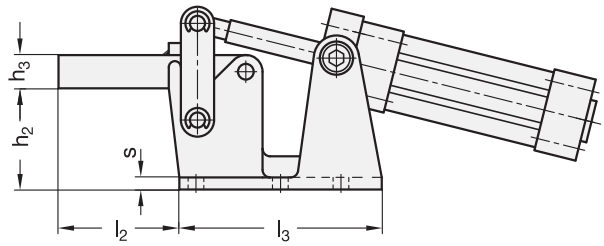
h3
h2
s
l2
l3

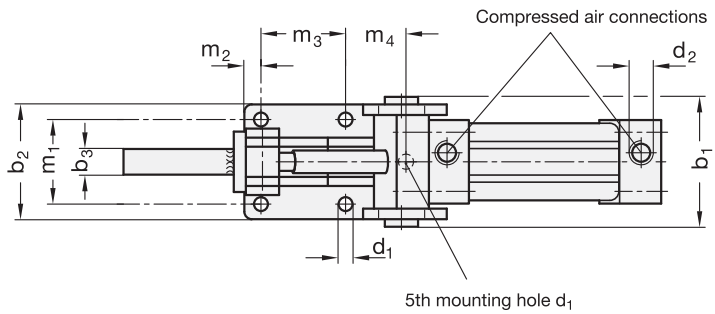
Compressed air connections
m2
m3
m4
d2
b2
m1
b3
b1
d1
5th mounting hole d1

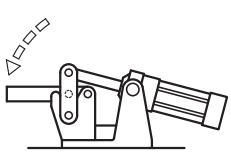

Pneumatically operated clamps

with angled base

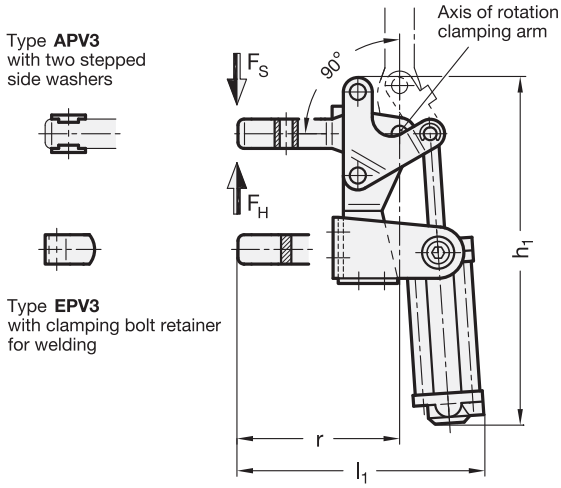

2 Type

APV3 forked clamping arm
EPV3 solid clamping arm

3 Coding

M Magnetic piston

1

Size	F_H in N Holding force	F_S in N Clamping force at 4 bar ≈	a ≈	b_1	b_2	b_3	b_4	b_5	d_1	d_2	d_3	Female thread-Ø for hose	e
200	2200	900	34	59,5	38,5	51	35	8,5	M 8	6,5	G ⅛	4	39,5
300	2700	1200	42	68,5	53	60,5	50	10,3	M 10	8,5	G ¼	6	50,5

Size	h_1 ≈	h_2	h_3	h_4	l_1 ≈	l_2 ≈	l_3 max.	m_1	m_2	m_3	m_4	m_5	r ≈	s
200	210	78	17	35	150	59	80	26	14,5	16	11	16	98	6
300	258	108	20	41	187	74	104	30	16,5	30	12	30	122	8

Specification

- Parts in sheet metal
  Case hardening steel C10
  zinc plated, blue passivated
- Bearing pins tempered
- Bearing bush case hardened
- Bearing pins for cylinder
  case hardened
- double acting cylinder
  max. pressure 6 bar
- all moving parts
  lubricated with special grease
- RoHS compliant

Accessory

- Clamping bolts → *Page 765*
- Holders for clamping bolts GN 809
  (for type EPV3) → *Page 770*
- Holders for clamping bolts GN 801
  (for type APV3) → *Page 771*
- Proximity switch with mounting bracket
  GN 896.2 → *Page 764*

Information

A special feature of the pneumatically operated clamps GN 862 is that they can be mounted in two different planes.

Pneumatically operated clamps GN 862 are also available as version M (magnetic piston). In conjunction with proximity switch GN 896.2 the piston is sensed and the generated electrical signal can be used in sequence control systems.

To ensure an extended life of the mechanical parts as well as air cylinder the operating pressure should not exceed 6 bar. In addition a lubro control unit should be fitted in the air line.

Two stepped side washers / clamping bolt retainers are included.

see also...

- *More information to pneumatically operated clamps → Page 677*

Pneumatically operated clamps		
GN 862-300-EPV3 (1, 2)	1	Size
	2	Type

Pneumatically operated clamps with Magnetic piston		
GN 862-200-APV3-M (1, 2, 3)	1	Size
	2	Type
	3	Coding

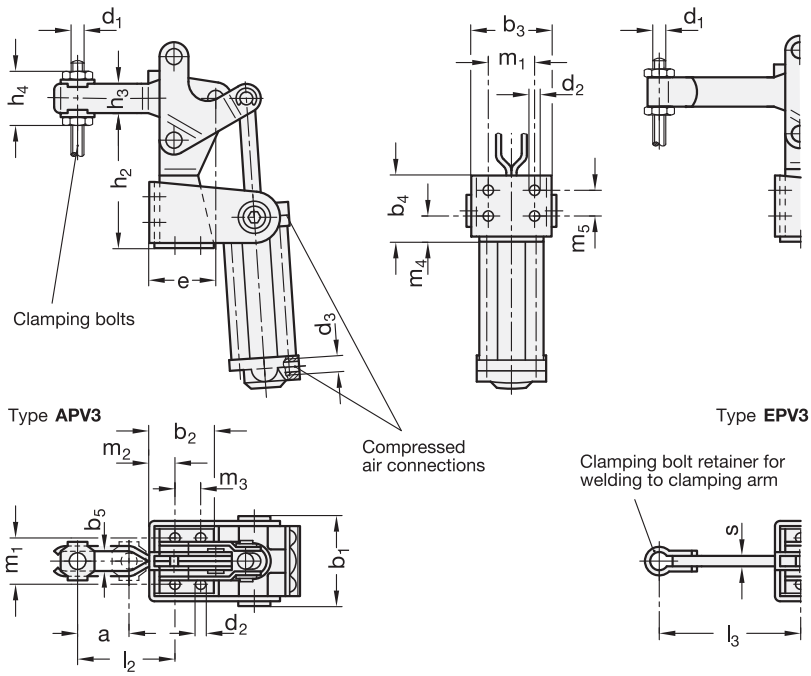
d1
h4
h3
h2
e
Clamping bolts
d3
Compressed
air connections
Type APV3
b3
m1
d2
b4
m5
m4
d1
Type EPV3
m2
b2
m3
b5
m1
b1
a
d2
l2
Clamping bolt retainer for
welding to clamping arm
s
l3

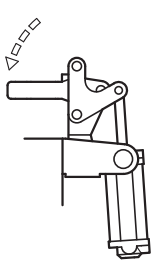

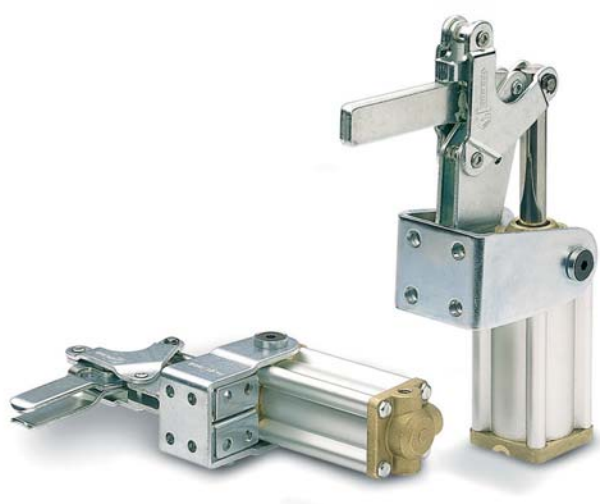

Pneumatically operated clamps

with additional manual operation

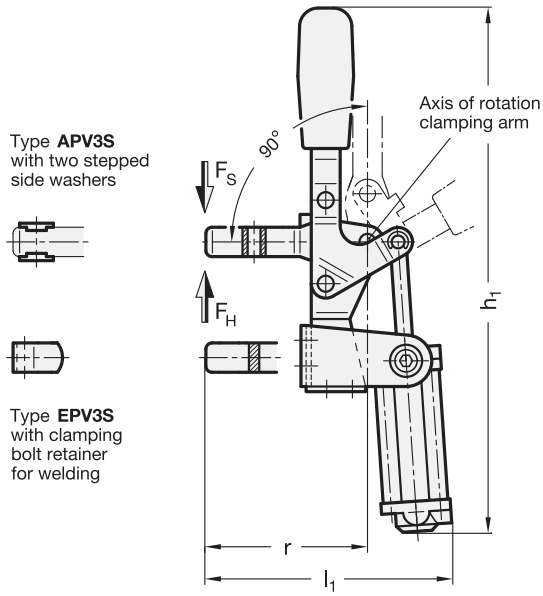

2 Type

APV3S forked clamping arm
EPV3S solid clamping arm

3 Coding

M Magnetic piston

1

Size	F_H in N Holding force	F_S in N Clamping force at 4 bar ≈	a	b_1	b_2	b_3	b_4	b_5	d_1	d_2	d_3	Female thread-Ø for hose	e
200	2200	900	34	59,5	38,5	51	35	8,5	M 8	6,5	G⅛	4	39,5
300	2700	1200	42	68,5	53	60,5	50	10,3	M 10	8,5	G¼	6	50,5

Size	h_1	h_2	h_3	h_4 ≈	l_1 ≈	l_2 ≈	l_3 ≈ max.	m_1	m_2	m_3	m_4	m_5	r ≈	s
200	296	78	17	35	150	59	80	26	14,5	16	11	16	98	6
300	360	108	20	41	187	74	104	30	16,5	30	12	30	122	8

Specification

- Parts in sheet metal
  Case hardening steel C10
  zinc plated, blue passivated
- Bearing pins tempered
- Bearing bush case hardened
- Bearing pins for cylinder
  case hardened
- double acting cylinder
  max. pressure 6 bar
- all moving parts
  lubricated with special grease
- solid moulded plastic handle sleeve
  red, oil resistant
- RoHS compliant

Accessory

- Clamping bolts → *Page 765*
- Holders for clamping bolts GN 809
  (for type EPV3S) → *Page 770*
- Proximity switch with mounting bracket
  GN 896.2 → *Page 764*

Information

A special feature of the pneumatically operated clamps GN 862.1 is that they can be mounted in two different planes.

They are also available as version M (magnetic piston). In conjunction with proximity switch GN 896.2 the piston is sensed and the generated electrical signal can be used in sequence control systems.

This clamp design is used, for instance, if one workpiece is to be manually clamped with several clamps and to be released pneumatically by means of a single electrical pulse.

To ensure an extended life of the mechanical parts as well as air cylinder the operating pressure should not exceed 6 bar. In addition a lubro control unit should be fitted in the air line.

Two stepped side washers / clamping bolt retainers are included.

Pneumatically operated clamps		
GN 862.1-300- EPV3S (1 = 300, 2 = EPV3S)	1	Size
	2	Type

Pneumatically operated clamps		
GN 862.1-200-APV3S-M (1 = 200, 2 = APV3S, 3 = M)	1	Size
	2	Type
	3	Coding

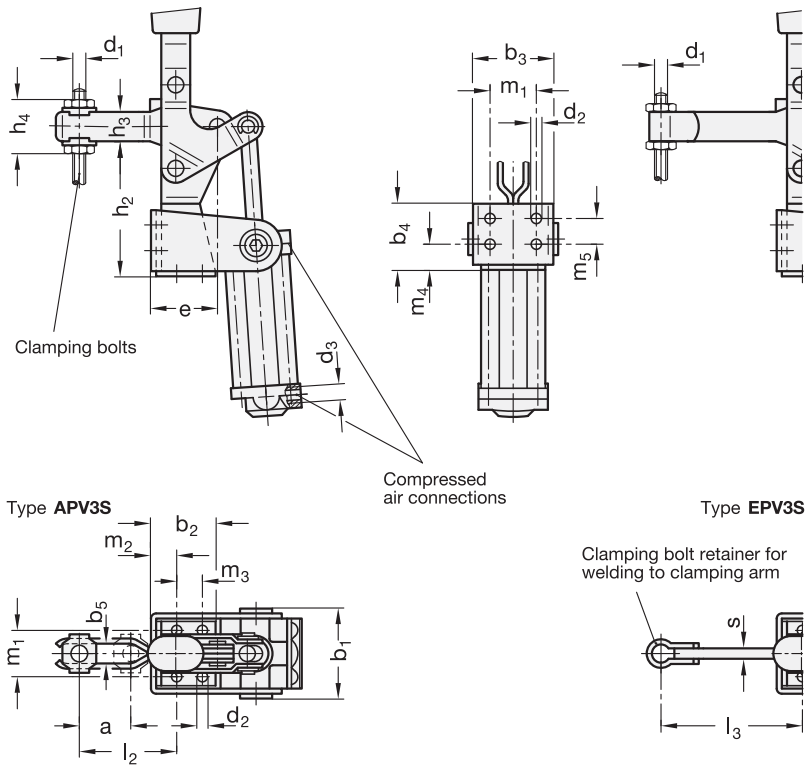
d1
h4
h3
h2
e
Clamping bolts
d3
Compressed
air connections
b3
m1
d2
b4
m5
m4
d1
Type APV3S
b2
m2
m3
b5
m1
b1
a
d2
l2
Type EPV3S
Clamping bolt retainer for
welding to clamping arm
s
l3

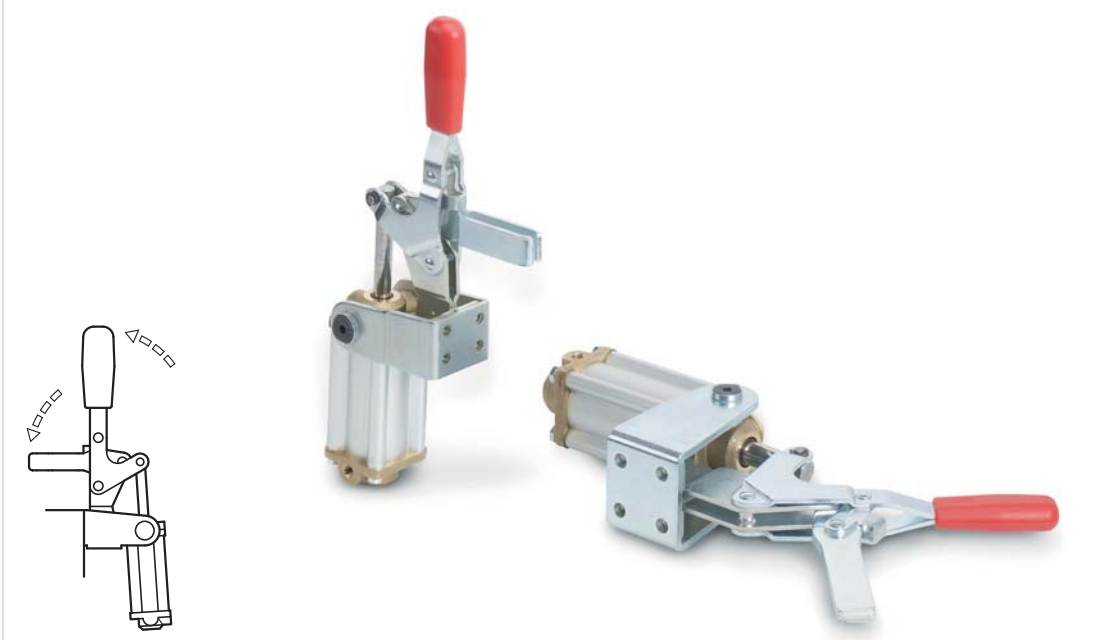

Pneumatically operated clamps

heavy duty Type

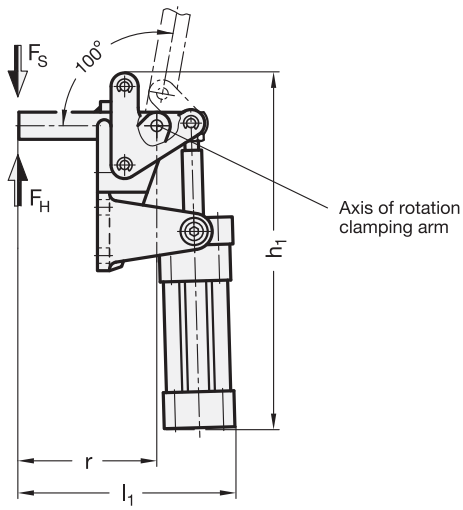

2 Type

EPV solid clamping arm

3 Coding

M Magnetic piston

1

Size	F_H in N Holding force	F_S in N Clamping force at 4 bar ≈	b_1 ≈	b_2	b_3	b_4	d_1	d_2	Female thread-Ø for hose	h_1 ≈
1000	10000	3400	102	90	80	20	10,5	G1/4	8	355
2000	20000	4320	112	100	90	20	13	G3/8	10	425

Size	h_2	h_3	l_1 ≈	l_2 ≈	m_1	m_2	m_3	m_4	r	s
1000	130	25	217,5	80	50	15	50	-	144	13
2000	157	35	246,5	100	54	19	58	45	168,5	14

Specification

- Body
  cast steel
  black lacquered
- other parts
  Steel St 60
  zinc plated, blue passivated
- Bearing pins
  case hardened
- double acting cylinder
  with adjustable cushioning
  max. operating pressure 6 bar
- all moving parts
  lubricated with special grease
- RoHS compliant

Accessory

- Proximity switch with mounting bracket GN 896.3 → *Page 764*

Information

Pneumatically operated clamps GN 863 have been constructed in such a way as to make them easily demountable: The bearing pins are axially fixed with circlips. This allows the clamping arm to be modified once it is dismantled, to suit any particular application.

To ensure an extended life of the mechanical parts as well as air cylinder the operating pressure should not exceed 6 bar. In addition a lubro control unit should be fitted in the air line.

Pneumatically operated clamps GN 863 are also available as version M (magnetic piston). In conjunction with a proximity switch GN 896.3 the piston position is sensed and the generated signal can be used in sequence control systems.

see also...

- *More information to pneumatically operated clamps → Page 677*

How to order

GN 863-1000-EPV-M (1 – 2 – 3)

1	Size
2	Type
3	Coding

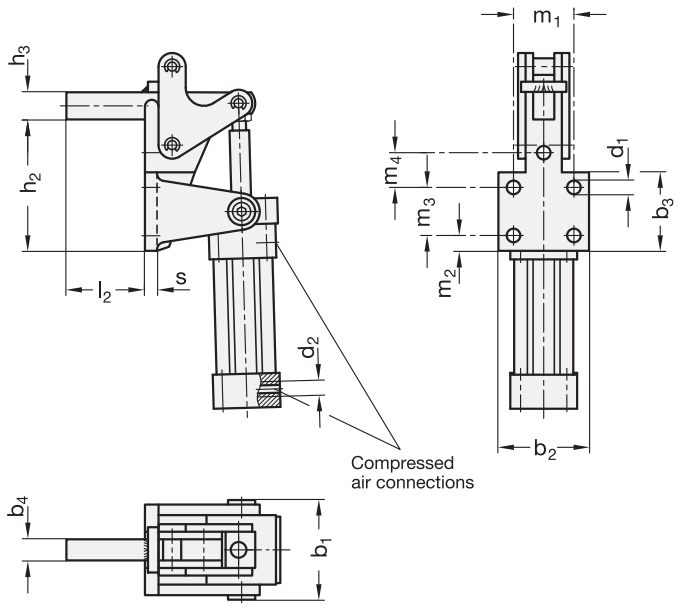
h3
h2
l2
s
d2
m1
m4
m3
m2
d1
b3
b2
Compressed
air connections
b4
b1

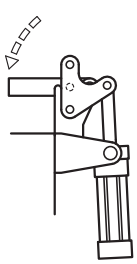

Pneumatically operated clamps

for push-pull clamping

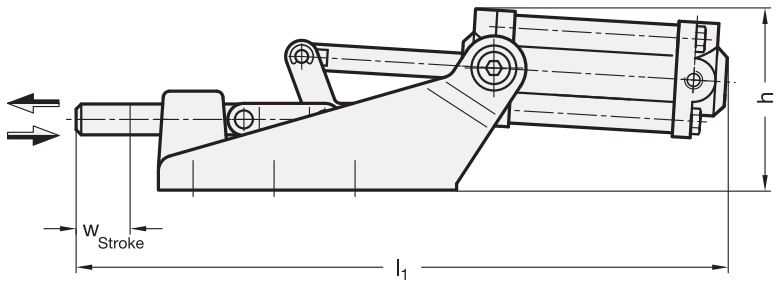

2 Type

SP3 Body
Steel forged

3 Coding

M Magnetic piston from size 360 upwards

1

Size	F_H in N Holding force	F_S in N Clamping force at 4 bar ≈	a	b_1	b_2	d_1	d_2	d_3	d_4	Female thread-Ø for hose	h
70	1200	600	14	42	64	8,5	M 6	4,3	G1/8	4	52
360	5600	1100	27,5	55	90	12	M 8	5,5	G1/8	4	70
1100	16000	1750	28	66	133	16	M 10	8,5	G1/4	6	88
2100	25000	3000	38,5	80	177	20	M 12	8,5	G1/4	8	100

Size	l_1	l_2	l_3	l_4	m_1	m_2	m_3	m_4	s ≈	t	w Stroke
70	171	78,5	20	64	26	13	26	-	8	12	12
360	260	113	32	116	33,5	30	36,5	-	9,5	16	21
1100	355	171	49	167	41	15	35	41	12	18	31
2100	469	222	61,5	231	50	35	50	50	13	22	45

Specification

- Body
  Steel
  - forged
  - chemically blackened
- Parts in sheet metal
  Case hardening steel C10
  zinc plated, blue passivated
- Plunger
  Steel St 37
  zinc plated, blue passivated
- Bearing pins (Bearing rivets)
  case hardened
- double acting cylinder
  max. pressure 6 bar
- RoHS compliant

Accessory

- Proximity switch with mounting bracket
  GN 896.1 / GN 896.2 ➔ *Page 764*

Information

The working principle of the pneumatically operated plunger clamp GN 890 is identical in construction and dimensions to the manual plunger clamp GN 842.

To ensure an ex-tended life of the mechanical parts as well as air cylinder the operating pressure should not exceed 6 bar. In addition a lubro control unit should be fitted in the air line. The sturdy mounting frame for the cylinder has been designed to avoid the trunions of the cylinder to protrude over the frame.

Pneumatically operated plunger clamps GN 890 are also available as from size 360 as version M (magnetic piston). In conjunction with a proximity switch (GN 896.1 / GN 896.2) the position of the piston is sensed and the generated signal can be used in sequence control systems.

Pneumatically operated clamps		
GN 890-1100-SP3 (1 = Size, 2 = Type)	1	Size
	2	Type

Pneumatically operated clamps with Magnetic piston		
GN 890-360-SP3-M (1 = Size, 2 = Type, 3 = Coding)	1	Size
	2	Type
	3	Coding

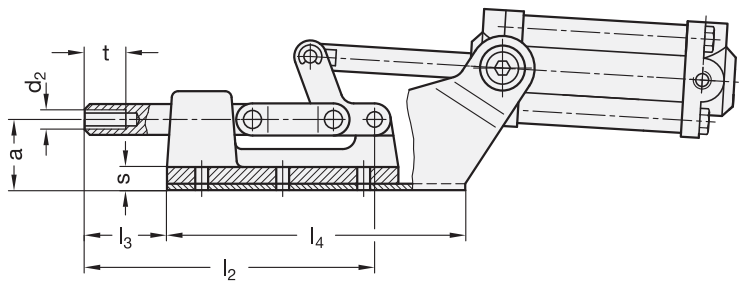
t
d2
a
s
l3
l4
l2

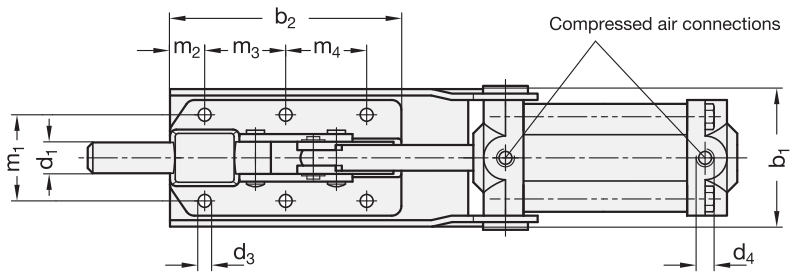
b2
m2
m3
m4
Compressed air connections
m1
d1
b1
d3
d4

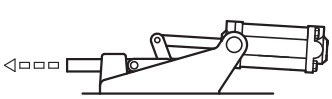

Proximity switches

with mounting bracket

Mounting **GN 896.1 / GN 896.2**

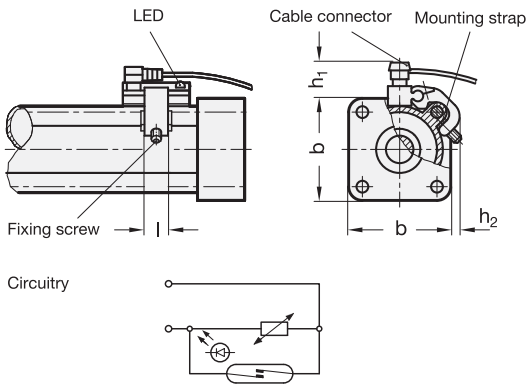

Mounting **GN 896.3**

Insert the thinner part of proximity switch into the provided slot. Then turn by 90° and fix inside the slot by means of the fixing screw.

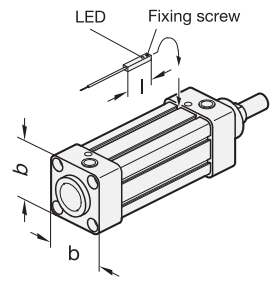

1

Pneumatically operated clamp	Proximity switch Type	b	h_1 ≈	h_2 ≈	Length l
GN 860-200-AP3-M	GN 896.2	44	24	10	14
GN 860-200-EP3-M	GN 896.2	44	24	10	14
GN 860-300-AP3-M	GN 896.2	50	27	11	14
GN 860-300-EP3-M	GN 896.2	50	27	11	14
GN 860-400-AP3-M	GN 896.1	62	24	10	14
GN 860-400-EP3-M	GN 896.1	62	24	10	14
GN 861-1000-EP-M	GN 896.3	65	-	-	30
GN 861-2000-EP-M	GN 896.3	75	-	-	30
GN 862-200-APV3-M	GN 896.2	44	24	10	14
GN 862-200-EPV3-M	GN 896.2	44	24	10	14
GN 862-300-APV3-M	GN 896.2	50	27	11	14
GN 862-300-EPV3-M	GN 896.2	50	27	11	14
GN 862.1-200-APV3S-M	GN 896.2	44	24	10	14
GN 862.1-200-EPV3S-M	GN 896.2	44	24	10	14
GN 862.1-300-APV3S-M	GN 896.2	50	27	11	14
GN 862.1-300-EPV3S-M	GN 896.2	50	27	11	14
GN 863-1000-EPV-M	GN 896.3	65	-	-	30
GN 863-2000-EPV-M	GN 896.3	75	-	-	30
GN 890-360-SP3-M	GN 896.2	44	24	10	14
GN 890-1100-SP3-M	GN 896.2	50	27	11	14
GN 890-2100-SP3-M	GN 896.1	62	26	10	14

Information

With proximity switches GN 896.1 to GN 896.1 the pneumatically operated clamps can emit control signals. To do this the clamps must be fitted with a special cylinder with magnetic piston which will cause the electric contacts in the REED switch to close. The proximity switches with their mounting brackets can be set anywhere along the full stroke length of the cylinder.

Specification	GN 896.1	GN 896.2	GN 896.3
Voltage range:	3 to 110 V AC/DC	3 to 110 V AC/DC	3 to 110 V AC/DC
Switch load:	0,3 A	0,3 A	0,2 A
Switch capacity (ind.):	10 VA	10 VA	6 VA
Voltage drop LED:	3 V	3 V	3 V
Temp. range:	- 20 °C to + 85 °C	- 20 °C to + 85 °C	- 20 °C to + 85 °C
Slew rate:	0,6 mS	0,6 mS	0,5 mS
Life expectancy:	10^7 operations	10^7 operations	10^7 operations
Protection class:	IP 67	IP 67	IP 67

Electric cable PVC
2 wires, 2,5m.
If used on DC brown wire to be connected to +, for the diode to work.

How to order		
1 GN 896.1	1	Type

Clamping bolts

with / without protective cap

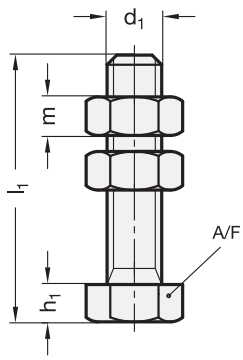

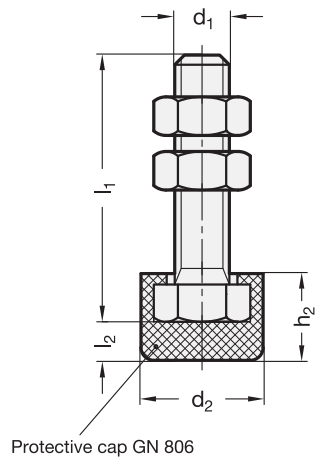

Inox
Stainless
Steel

3 Type

A without protective cap
B with protective cap

1 d_1 Steel	Stainless Steel	2 l_1			d_2	h_1	h_2	l_2	m	A/F
M 4	M 4	23	-	-	11	3	6,5	2,5	3,2	7
M 5	M 5	38	-	-	12,5	3,5	8	2,5	4,7	8
M 6	M 6	29	49	-	15	4	10	4	5,2	10
M 8	M 8	36	56	96	19	5,5	13	5,5	6,8	13
M 10	-	43	77	127	24	6,5	16	7	8,4	16
M 12	-	53	88	128	26	7,5	19	8,5	10,8	18
M 14*	-	54	-	-	-	9	-	-	12,8	21

* Clamping bolts M14 is not available as type B (with protective cap)

Specification

4

- Steel —
  - Hexagon bolt ISO 4017 / DIN 933
    Tensile strength class 8.8 (800 N/mm²)
    zinc plated, blue passivated
  - Hexagon nuts ISO 4032
    zinc plated, blue passivated
- Stainless Steel AISI 304 **NI**
  - Hexagon bolt ISO 4017 / DIN 933
  - Hexagon nuts ISO 4032
- Protective caps GN 806 → *Page 627*
- *Stainless Steel characteristics → Page 1144*
- RoHS compliant

Information

The two hexagon nuts are included parts of the order.

see also...

- *Holders for clamping bolts GN 809 → Page 770*
  (for toggle clamps with solid clamping arm)
- *Holders for clamping bolts GN 801 → Page 771*
  (for toggle clamps with forked clamping arm)

Steel-Clamping bolt		
1 2 3	1	d_1
GN 807-M8-56-B	2	l_1
	3	Type

Stainless Steel-Clamping bolt		
1 2 3 4	1	d_1
GN 807-M6-29-A-NI	2	l_1
	3	Type
	4	Material

Clamping bolts

with rubber pressure pad

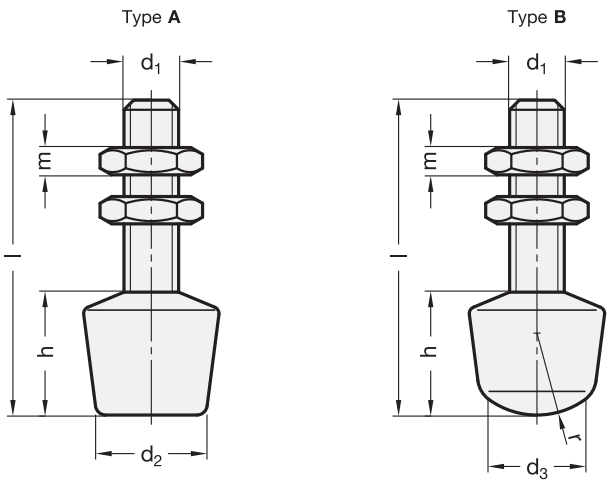

Inox
Stainless
Steel

3 Type

A straight pressure pad
B round pressure pad

1 d_1	2 Length l		d_2	d_3	h	m	r
M 5	45	-	10	9	11	2,7	8
M 6	35	55	13	12	12	3,2	10
M 8	43	68	16	14	18	4	12
M 10	50	77	20	18	21	5	15

Specification

4

- Bolt
  - Steel — **ST**
    zinc plated, blue passivated
  - Stainless Steel AISI 304 — **NI**
- Hexagon nut ISO 4035
  - Steel
    zinc plated, blue passivated
  - Stainless Steel AISI 304
- Pressure pad
  Rubber, Neoprene (CR)
  - 85 Shore A
  - vulcanized
  - black
- *Stainless Steel characteristics → Page 1144*
- *Elastomer characteristics → Page 1140*
- RoHS compliant

Information

The two hexagon nuts are included parts of the order.

see also...

- *Holders for clamping bolts GN 809 → Page 770*
  (for toggle clamps with solid clamping arm)
- *Holders for clamping bolts GN 801 → Page 771*
  (for toggle clamps with forked clamping arm)

How to order

1 2 3 4
GN 708.1-M8-43-B-ST

1	d_1
2	Length l
3	Type
4	Material

Clamping bolts

with swivelling steel thrust pad

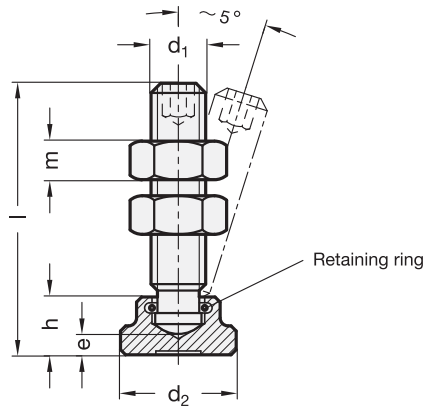

1 d1	2 Length l				d2	e	h	m
M 5*	37	-	-	-	14	-	10	4,7
M 6	32	42	52	-	12	2,2	7	5,2
M 8	38	48	63	83	16	3	9	6,8
M 10	44	54	64	84	20	3,6	11	8,4
M 12	55	65	85	105	25	4,5	13	10,8

* Clamping bolt M 5: bolt end and thrust pad are not hardened and not removable.

Specification

- Grub screw
  DIN 6332 → Page 592
- Thrust pad
  DIN 6311 → Page 594
- Hexagon nuts ISO 4032 / DIN 934
  Steel
  zinc plated, blue passivated
- RoHS compliant

Information

By means of the retaining ring in the thrust pad a simple and toggle link between bolt and thrust pad is created.

The two hexagon nuts are included parts of the order.

see also...

- *Holders for clamping bolts GN 809 → Page 770*
  (for toggle clamps with solid clamping arm)
- *Holders for clamping bolts GN 801 → Page 771*
  (for toggle clamps with forked clamping arm)

How to order		
GN 802-M8-48 (1 = M8, 2 = 48)	1	d1
	2	Length l

Clamping bolts

with swivelling plastic thrust pad

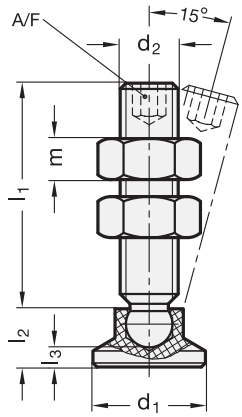

Inox Stainless Steel

1	2	3							
d_1	d_2	l_1				l_2	l_3 ≈	m	A/F
15	M 6	26	36	46	-	7,6	3,6	5,2	3
15	M 8	20	35	45	58	7,6	2,5	6,8	4
18	M 8	20	35	45	58	9,2	4,2	6,8	4
18	M 10	34	44	57	74	9,2	3,4	8,4	5
21	M 8	20	35	45	58	10	5	6,8	4
21	M 10	34	44	57	74	10	4,3	8,4	5
21	M 12	34	57	74	94	10	3,4	10,8	6
25	M 8	20	35	45	58	10,5	5,5	6,8	4
25	M 10	34	44	57	74	10,5	4,6	8,4	5
25	M 12	34	57	74	94	10,5	3,6	10,8	6
32	M 8	20	35	45	58	11	6	6,8	4
32	M 10	34	44	57	74	11	5	8,4	5
32	M 12	34	57	74	94	11	4,2	10,8	6
40	M 8	20	35	45	58	13	8	6,8	4
40	M 10	34	44	57	74	13	7	8,4	5
40	M 12	34	57	74	94	13	6,2	10,8	6

Specification

4

- Thrust pad
  Plastic (Polyacetal POM)
  - temperature resistant up to 80 °C
  - black, matt
- Grub screw
  - Steel **ST**
    Tensile strength class 5.8 (500 N/mm²)
    blackened
  - Stainless Steel AISI 303 **NI**
- Hexagon nuts ISO 4032
  - Steel
    zinc plated, blue passivated
  - Stainless Steel AISI 303
- *Stainless Steel characteristics → Page 1144*
- RoHS compliant

Information

The ball end of the grub screw can be hit easily into the thrust pad and removed.

Hexagon nuts are icluded.

see also...

- *Holders for clamping bolts GN 809 → Page 770*
  (for toggle clamps with solid clamping arm)
- *Holders for clamping bolts GN 801 → Page 771*
  (for toggle clamps with forked clamping arm)

Steel-Clamping bolts		
1 2 3 4	1	d_1
GN 903-18-M8-35-ST	2	d_2
	3	l_1
	4	Material

Stainless Steel-Clamping bolts		
1 2 3 4	1	d_1
GN 903-21-M12-57-NI	2	d_2
	3	l_1
	4	Material

Clamping bolts

with adjustable spring loaded thrust pad

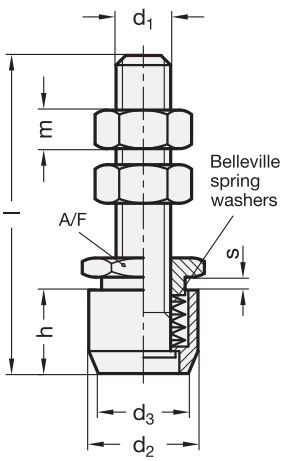

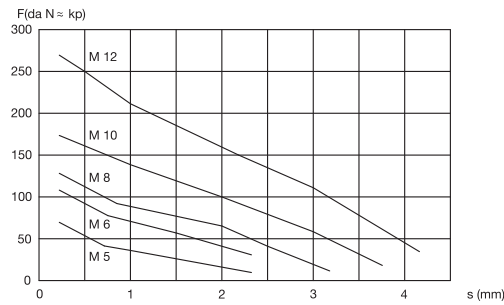

1 d_1	2 Length l ±1	d_2	d_3	h	m	A/F
M 5	45	13	11	13	4,7	14
M 6	50	16	13	15	5,2	16
M 8	70	18	15	17	6,8	19
M 10	85	24	18	20	8,4	24
M 12	106	28	21	24	10,8	27

Specification

- Bolt
  Steel
  - Tensile strength class 5.8 (500 N/mm²)
  - zinc plated, blue passivated
- Hexagon nuts ISO 4032
  Steel
  zinc plated, blue passivated
- Thrust pad
  Steel
  nitrided, blackened
- RoHS compliant

Information

In order to pass the the dead centre point and / or compensate for work piece tolerances when using hand operated toggle clamps, an elastic thrust pad such as GN 708.1 can be used.

Clamping bolts GN 804 fitted with Belleville spring washers do not only help to overcome workpiece tolerances but they also allow presetting of the required clamping force.

This adjustment can be made with the hexagon nut (A/F). The setting nut stroke is the distance by which the Belleville washers can be preloaded as shown on the above graph to give the required clamping force.

The thrust pad is movable.

The two hexagon nuts are included parts of the order.

see also...

- *Holders for clamping bolts GN 809 → Page 770*
  (for toggle clamps with solid clamping arm)
- *Holders for clamping bolts GN 801 → Page 771*
  (for toggle clamps with forked clamping arm)

How to order		
GN 804-M10-85 (1 = d_1, 2 = Length l)	1	d_1
	2	Length l

Holders for clamping bolts

for toggle clamps with solid clamping arm

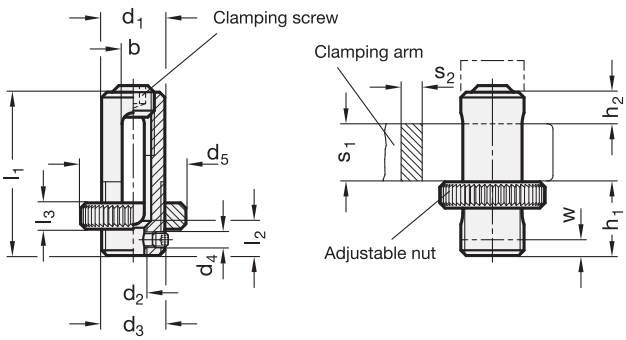

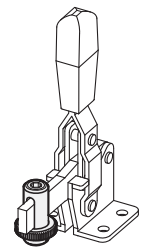

1 d_1	2 d_2	b	d_3	d_4	d_5	h_1 max.	h_1 min.	h_2 max.	h_2 min.
12	M 5	4,2	M 12 x 1,5	M 3	20	14	8	12	6
16	M 6	5,3	M 16 x 1,5	M 4	22	18	10	16	8
18	M 8	6,3	M 18 x 1,5	M 4	24	23 (24)*	13 (14)*	20	10
20	M 8	7,3	M 20 x 1,5	M 5	27	25	15	20	10
22	M 10	8,3	M 22 x 1,5	M 5	30	28	14	24	12

d_1	l_1	l_2 max. thread depth	l_3	s_1	s_2	w Adjustable range axial	for toggle clamps GN 810 GN 810.1 GN 860 GN 862 GN 862.1	GN 820 GN 820.1	GN 812 GN 812.1
12	31	6	5	11	4	3	70	75	-
16	40	10	5,5	14	5	4	125	130	-
18	51	13	6	18 (17)*	6	5	200	230	200
20	57	15	7	22	7	5	-	355	-
22	60	16	8	20	8	5	300	-	300

* Dimension in (...) applies only to GN 812.

Specification

- Steel
  zinc plated, blue passivated
- RoHS compliant

Information

Holders GN 809 for clamping bolts have been developed for various toggle clamps in the design version „solid clamping arm“.

The holders can be moved along the clamping arm and be adjusted in height. Once the desired position is reached, fix the mounting in place with the clamping screw.

The thread d_2 serves to hold the wide variety of clamping bolts, spring elements and similar devices.

see also...

- *Holders for clamping bolts GN 801 → Page 771*
  (for toggle clamps with open clamping arm)

How to order		
GN 809-12-M5 (1 2)	1	d_1
	2	d_2

Holders for clamping bolts

for toggle clamps with forked clamping arm

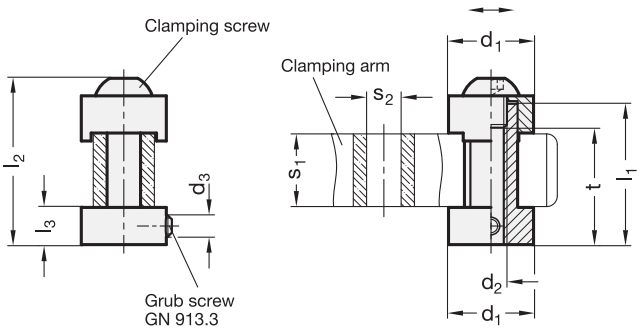

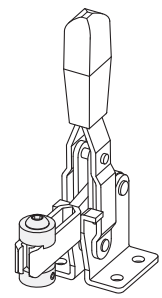

1 d_1	2 d_2	l_1	l_2	l_3	d_3	s_1 Height Clamping arm	s_2	t useable thread depth of the clamping arm	for toggle clamps GN 810 GN 810.1 GN 860 GN 862 GN 862.1	GN 820 GN 820.1	GN 910 GN 910.1	GN 812 GN 812.1
16	M 6	26,5	31 (33)*	7	M 4	14 (16)*	6,5	22 (24)*	125	130	220	-
18	M 8	31	38 (37)**	8	M 5	18 (17)**	8,5	26 (25)**	200	230	-	200
22	M 10	37	45 (47)***	8	M 5	20 (22)***	10,5	28 (22)***	300	355	-	300
24	M 10	41	49	8	M 5	24	10	32	-	-	440	-
26	M 10	39	48	8	M 5	22	12,5	30	400	-	-	-

* Dimension in (...) applies to GN 910 and GN 910.1
** Dimension in (...) applies to GN 812 and GN 812.1
*** Dimension in (...) applies to GN 820.1

Specification

- Steel
  zinc plated, blue passivated
- RoHS compliant

Information

Holders for clamping bolts GN 801 have been developed for various toggle clamps in the version „forked clamping arm“.

The holders can be moved along the clamping arm. Once the desired position is reached, it can be fixed by the clamping screw.

The thread d_2 serves to hold the wide variety of clamping bolts, spring elements and similar devices.

Thereby the ideal clamping height can be adjusted without a loosening of the claming of the holder to the clampnig arm.

see also...

- *Holders for clamping bolts GN 809 → Page 770*
  (for toggle clamps with solid clamping arm)

How to order		
GN 801-16-M6 (1 = 16, 2 = M6)	1	d_1
	2	d_2

GN 864

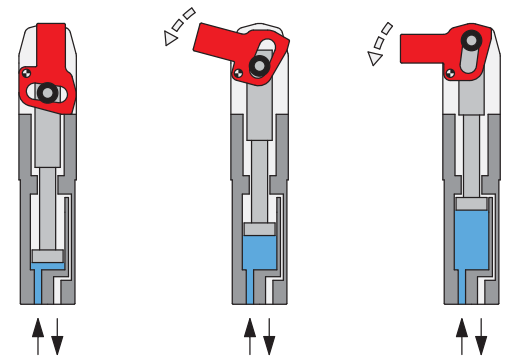

GN 865

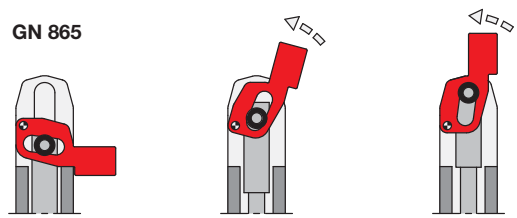

GN 866

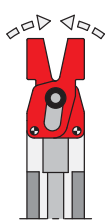

GN 866.1

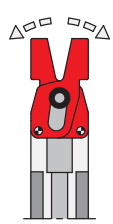

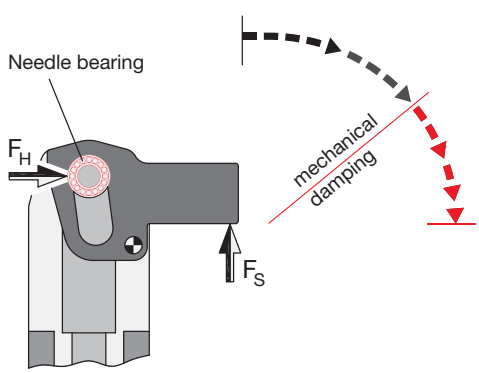

These pneumatically operated Power clamps (Patent MiSAT) are used for clamping, holding, gripping and positioning of work pieces in jigs and handling systems.

The salient points of these Power clamps are:

- the high clamping force
- the small dimensions
- the reduced air consumption
- the light weight

The working principle of these three types of clamps can be seen from the sketches on the left.

Pistons with diameters of 20, 32 and 40 mm yield a clamping force of 60 Nm up to 300 Nm, which leads to clamping forces being much above those of competitors' clamps.

The Power clamps have been designed and configured to achieve an extended life. Functional tests have proved that even after 20 million cycles they were still serviceable.

Further salient design points are:

- The movement path is designed in such a manner that at the end of the clamping stroke (Clamping force FS), irreversible self locking (Holding force FH) is achieved.

- The forward stroke sequence of the clamping arm is rapid but the ultimate clamping action is slow and as a result pneumatic damping is normally not required. Upon request, however, it can be supplied when big masses are moved.

- The clamping mechanism is fitted with needle bearings which give optimum clamping forces and reduced wear.

- The steel cylinder with the integrated clamping mechanism are in one unit. This leads to high stability for these small units with an extended range of applications. The placement of the air connection at the bottom end leads also to many other advantages.

- The clamping mechanism of GN 864 is also shrouded to avoid the ingress of dirt and other objects which could interfere with the proper functioning of the clamps (such as welding operations!)

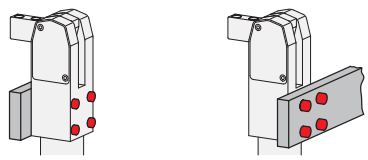

The mounting holes on the main body of the power clamp have been designed to allow installation direct on the female threaded holes or alternatively with through bolts.

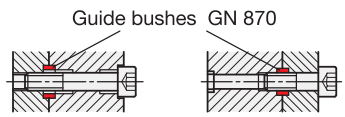

Guide bushes present an important function when mounting the Power clamps: they absorb lateral thrust and they ensure a precise alignment .

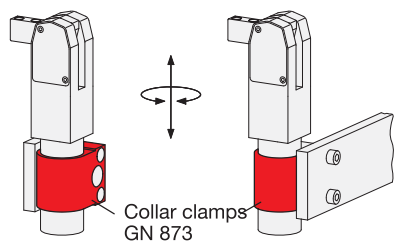

Mounting of the cylinder by a collar clamp increases the numerous ways they can be installed.

Even collar clamps use guide bushes for precise positioning.

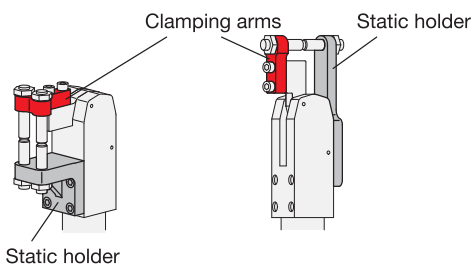

There is an extensive range of accessories available for power clamps, such as tool holders (for clamping arms) thrust bolts and clamping jaws. The sketches shown on the right give some idea.

The combination of clamping tools on the clamping arm and static holders represent together a tool set.

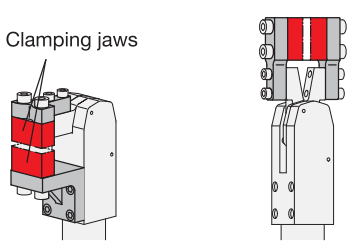

For the fixing and precise positioning of clamping arms and jaws, guide bushes GN 870 are also used. The individual data sheets give further information.

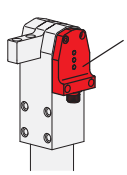

All power clamps can be fitted with proximity switches (inductive sensors) to monitor the end position of the stroke.

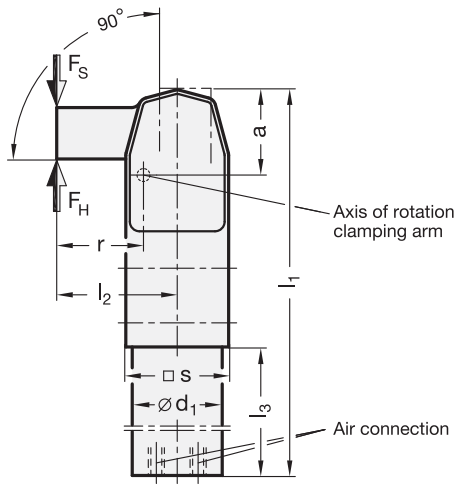

2 Type

BL clamping arm horizontal

1

Size (Piston-Ø)	max. clamping moment in Nm at 6 bar	F_S in N Clamping force at r at 6 bar	F_H in N Holding force at r at 6 bar	a	b –0,2	d_1 h8	d_2	d_3 H8	d_4	d_5	h_1	h_2
20	60	2220	4070	27	10	28	M 5	7	4,2	M 5	16	51
32	150	4110	5620	36,5	12	40	M 6	9	5	G ⅛	21	75,5
40	300	6740	7530	44,5	16	50	M 8	11	6,8	G ⅛	26	91,5
50	475	9000	13300	52,5	18	60	M 10	13	8,5	G ⅛	31	114

Size (Piston-Ø)	l_1 –0,5	l_2	l_3	l_4	l_5	m_1 ±0,01	m_2	m_3 ±0,01	m_4 ±0,01	m_5	r	s	t
20	150	37,5	70	21,5	4,5	12	7,5	17	22	13	27	32	13
32	206	52	91	31	6	18	10	25	30	22	36,5	42	15
40	244	63	104	37	7,5	22	13	30	37	25	44,5	52	18
50	279	72,5	110,5	41,5	8	27	12	47	44	35	52,5	62	21

Specification

- Steel C45 blackened
- max. pressure 10 bar
- *ISO-Fundamental Tolerances → Page 1132*
- RoHS compliant

Information

The maximum clamping moment of the power clamps GN 864 is reached once the clamping arm is at the end of its stroke. For this reason the working stroke should be completed as closely as possible to the stroke end.

see also...

- *Operating principle, mounting methods → Page 772*
- *Guide bushes GN 870 → Page 792*
- *Proximity switch with mounting bracket → Page 793*
- *Accessories → Page 783*

How to order		
GN 864-20-BL (1 = Size, 2 = Type)	1	Size
	2	Type

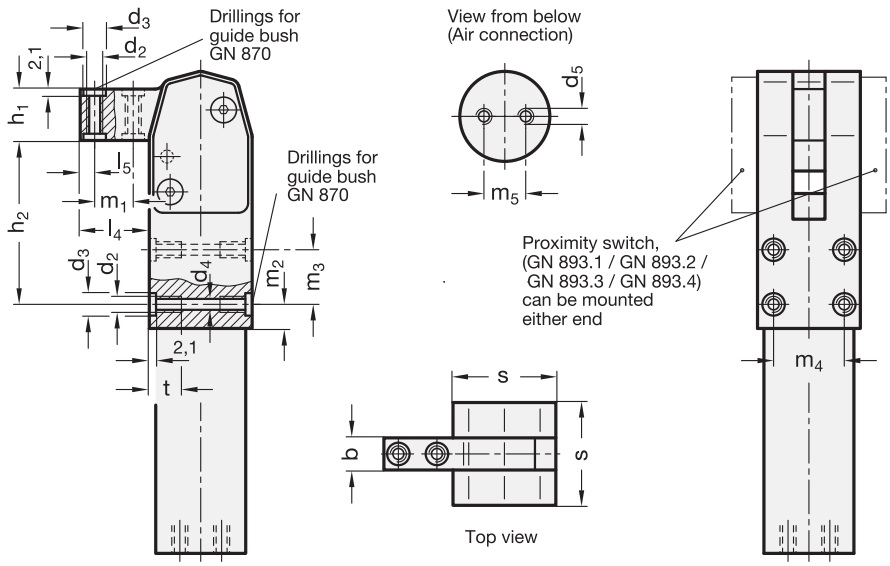
Drillings for guide bush GN 870
Drillings for guide bush GN 870
View from below (Air connection)
Proximity switch, (GN 893.1 / GN 893.2 / GN 893.3 / GN 893.4) can be mounted either end
Top view
d3
d2
2,1
h1
h2
l5
m1
l4
d4
m2
m3
t
d5
m5
m4
s
b

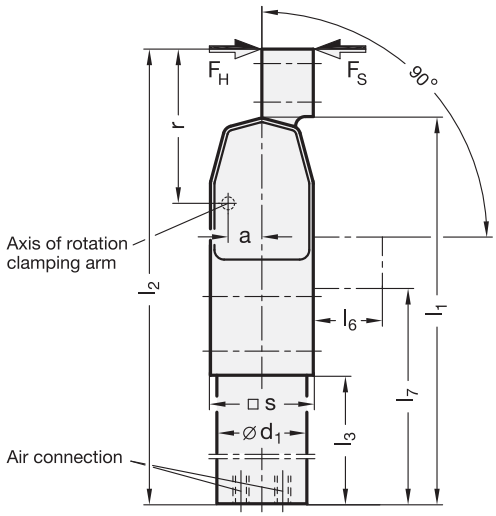

2 Type

BI clamping arm vertical

1

Size (Piston-Ø)	max. clamping moment in Nm at 6 bar	F_S in N Clamping force at r at 6 bar	F_H in N Holding force at r at 6 bar	a	b –0,2	d_1 h8	d_2	d_3 H8	d_4	d_5	h_1	h_2	l_1 –0,5
20	60	1250	2300	10,5	10	28	M 5	7	4,2	M 5	16	16	150
32	150	2220	3040	15,5	12	40	M 6	9	5	G 1/8	21	21	206
40	300	3640	4060	18,5	16	50	M 8	11	6,8	G 1/8	26	26	244
50	475	4900	7200	21,5	18	60	M 10	13	8,5	G 1/8	31	31	279

Size (Piston-Ø)	l_2 –0,5	l_3	l_4	l_5	l_6	l_7 –0,5	m_1 ±0,01	m_2	m_3 ±0,01	m_4 ±0,01	m_5 ±0,01	m_6	r	s	t
20	171	70	21	4,5	21	97	12	7,5	17	34	22	13	47,5	32	13
32	237	91	31	6	31	133	18	10	25	51	30	22	67,5	42	15
40	282	104	38	7,5	38	155	22	13	30	62	37	25	82,5	52	18
50	323	110,5	44	8	44	174	27	12	47	71,5	44	35	96,5	62	21

Specification

- Steel C45 blackened
- max. pressure 10 bar
- *ISO-Fundamental Tolerances → Page 1132*
- RoHS compliant

Information

The clamps GN 865 is reached once the clamping arm is at the end of its stroke. For this reason the working stroke should be completed as closely as possible to the stroke end.

see also...

- *Operating principle, mounting methods → Page 772*
- *Guide bushes GN 870 → Page 792*
- *Proximity switch with mounting bracket → Page 793*
- *Accessories → Page 783*

How to order		
GN 865-40-BI (1 2)	1	Size
	2	Type

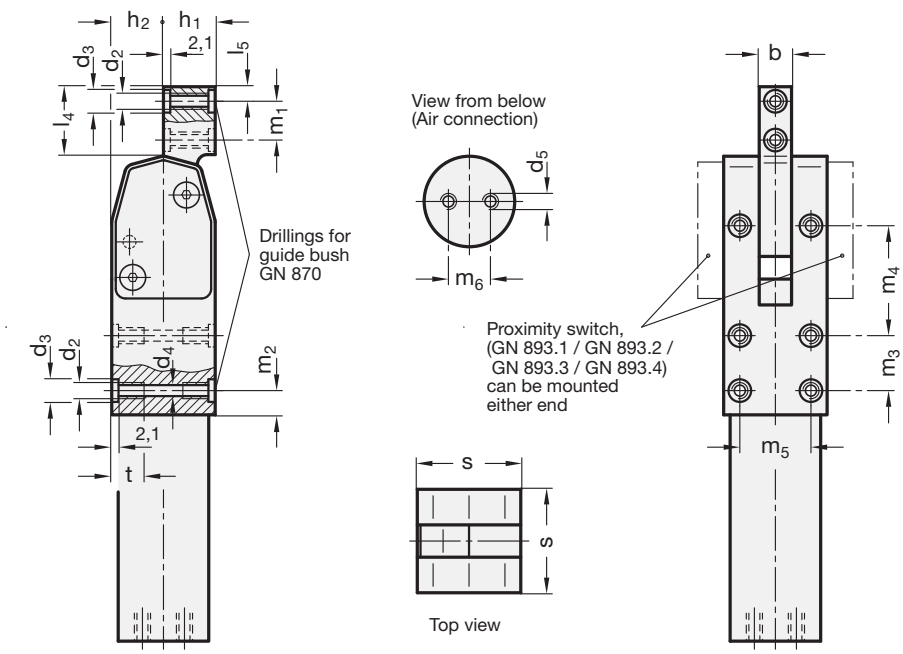
h2
h1
2,1
l5
d3
d2
l4
m1
Drillings for
guide bush
GN 870
d3
d2
d4
m2
2,1
t
View from below
(Air connection)
d5
m6
Proximity switch,
(GN 893.1 / GN 893.2 /
GN 893.3 / GN 893.4)
can be mounted
either end
s
s
Top view
b
m4
m3
m5

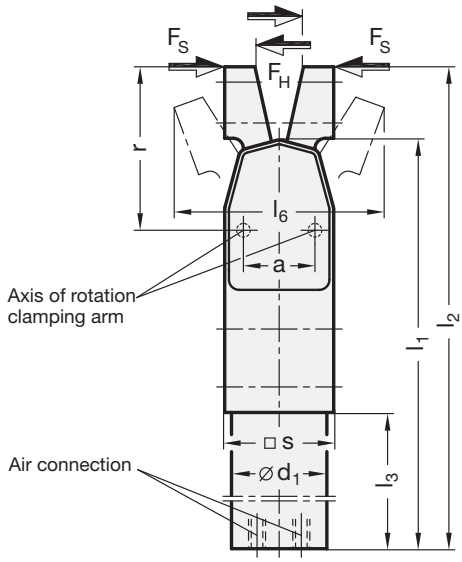

2 Type

BC 2 clamping arms vertical for centred clamping

1

Size (Piston-Ø)	max. clamping moment in Nm at 6 bar	**F_S in N** Clamping force at r at 6 bar	**F_H in N** Holding force at r at 6 bar	**a**	**b** –0,2	**d_1** h8	**d_2**	**d_3** H8	**d_4**	**d_5**	**l_1** –0,5	**l_2** –0,5
20	60	630	1150	21	10	28	M 5	7	4,2	M 5	150	171
32	150	1110	1520	31	12	40	M 6	9	5	G ⅛	206	237
40	300	1800	2000	37	16	50	M 8	11	6,8	G ⅛	244	282

Size (Piston-Ø)	**l_3**	**l_4**	**l_5**	**l_6** ≈	**m_1** ±0,01	**m_2**	**m_3** ±0,01	**m_4** ±0,01	**m_5**	**r**	**s**	**t**
20	70	21	4,5	45	12	7,5	17	22	13	48	32	13
32	91	31	6	72,5	18	10	25	30	22	67,5	42	15
40	104	38	7,5	89,5	22	13	30	37	25	82,5	52	18

Specification

- Steel C45 blackened
- max. pressure 10 bar
- *ISO-Fundamental Tolerances → Page 1132*
- RoHS compliant

Information

The clamping forces F_S in GN 866 power clamps are directed inwards at the clamping arms.

The maximum clamping moment of the power clamps GN 866 is reached once the clamping arm is at the end of its stroke. For this reason the working stroke should be completed as closely as possible to the stroke end.

see also...

- *Operating principle, mounting methods → Page 772*
- *Guide bushes GN 870 → Page 792*
- *Proximity switch with mounting bracket → Page 793*
- *Accessories → Page 783*

How to order		
GN 866-20-BC (1 = Size, 2 = Type)	1	Size
	2	Type

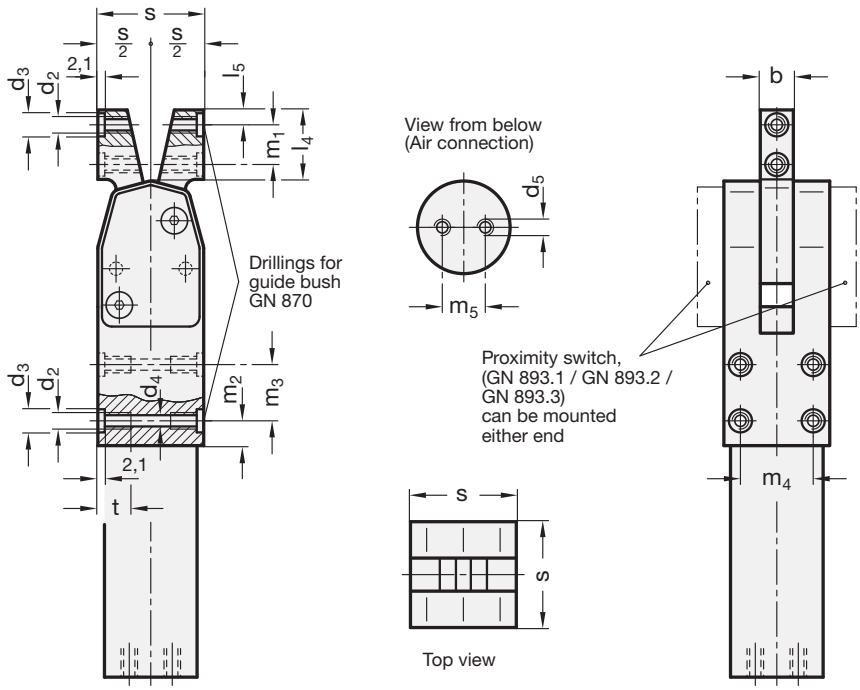
s
s/2
s/2
2,1
d3
d2
l5
m1
l4
Drillings for
guide bush
GN 870
d3
d2
d4
m2
m3
2,1
t
View from below
(Air connection)
d5
m5
Proximity switch,
(GN 893.1 / GN 893.2 /
GN 893.3)
can be mounted
either end
s
s
Top view
b
m4

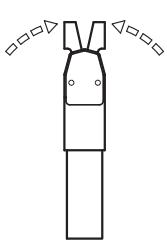

Power clamps

for centred clamping

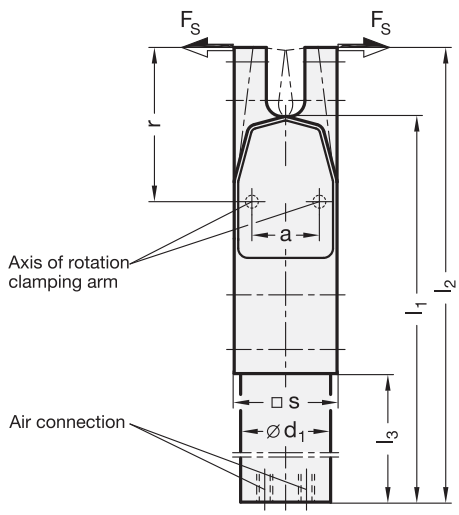

2 Type

BE 2 clamping arms vertical for centred clamping

1

Size (Piston-Ø)	max. clamping moment in Nm at 6 bar	**F_S in N** Clamping force at r at 6 bar	**F_H in N** Holding force at r at 6 bar	**a**	**b** –0,2	**d_1** h8	**d_2**	**d_3** H8	**d_4**	**d_5**	**l_1** –0,5	**l_2** –0,5
20	60	630	1150	21	10	28	M 5	7	4,2	M 5	150	171
32	150	1110	1520	31	12	40	M 6	9	5	G ⅛	206	237
40	300	1800	2000	37	16	50	M 8	11	6,8	G ⅛	244	282

Size (Piston-Ø)	**l_3**	**l_4**	**l_5**	**m_1** ±0,01	**m_2**	**m_3** ±0,01	**m_4** ±0,01	**m_5**	**r**	**s**	**t**
20	70	21	4,5	12	7,5	17	22	13	48	32	13
32	91	31	6	18	10	25	30	22	67,5	42	15
40	104	38	7,5	22	13	30	37	25	82,5	52	18

Specification

- Steel C45 blackened
- max. pressure 10 bar
- *ISO-Fundamental Tolerances → Page 1132*
- RoHS compliant

Information

The clamping forces F_S in GN 866.1 power clamps are directed outwards at the clamping arms.

The maximum clamping moment is reached once the clamping arm is at the end of its stroke. For this reason the working stroke should be completed as closely as possible to the stroke end.

see also...

- *Operating principle, mounting methods → Page 772*
- *Guide bushes GN 870 → Page 792*
- *Proximity switch with mounting bracket → Page 793*
- *Accessories → Page 783*

How to order		
GN 866.1-40-BE (1 = Size, 2 = Type)	1	Size
	2	Type

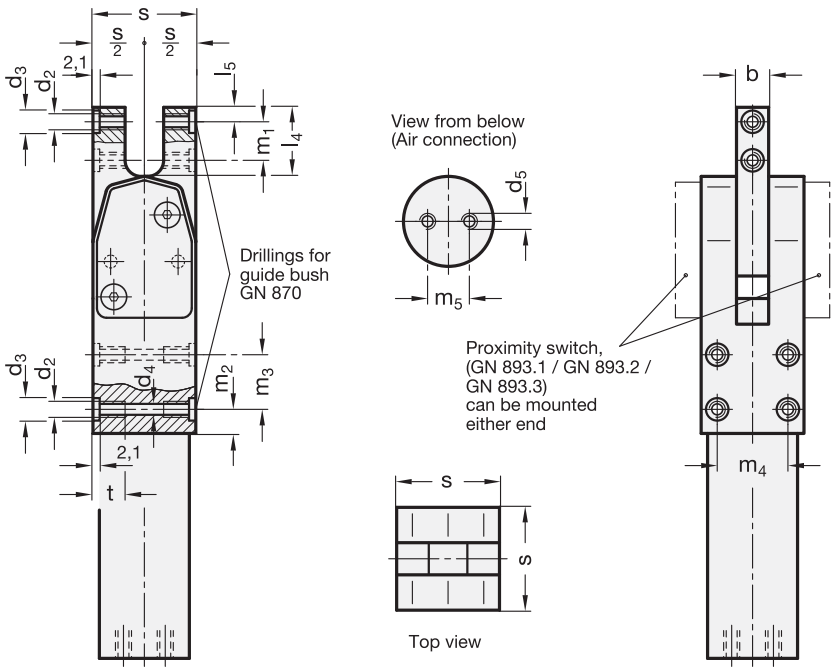
s
s/2
s/2
2,1
d3
d2
l5
m1
l4
Drillings for
guide bush
GN 870
d3
d2
d4
m2
m3
2,1
t
View from below
(Air connection)
d5
m5
Proximity switch,
(GN 893.1 / GN 893.2 /
GN 893.3)
can be mounted
either end
s
s
Top view
b
m4

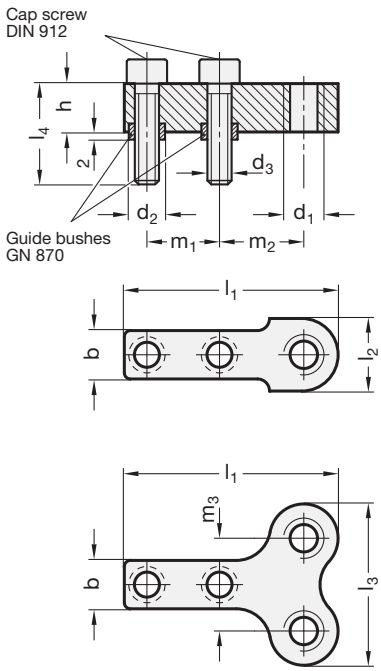

Mounting examples

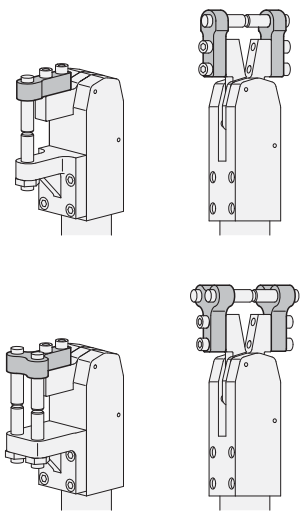

3 Type

E for one clamping bolt
Z for two clamping bolts

1 b −0,2	2 d_1	d_2 H8 h6	d_3	h	l_1	l_2	l_3	l_4	m_1	m_2	m_3
10	M 8	7	M 5	10	37	13	30	19,5	12	14,5	17
12	M 10	9	M 6	12	53	17	40	29,5	18	20,9	23
16	M 12	11	M 8	14	63	20	50	34	22	23,5	30
18	M 12	13	M 10	16	73	20	60	34	27	28,5	40

Specification

- Steel C45
  blackened
- *ISO-Fundamental Tolerances → Page 1132*
- RoHS compliant

Information

Holders for clamping bolts GN 867 are suitable for use on clamping arms of the Power clamps GN 864 / GN 865 / GN 866 / GN 866.1.

Holders for two clamping bolts (Type Z) are preferably used in such applications where absolutely rigid clamping of a sheet metal component is essential. For the same purpose ball point screws with serrated ball pads GN 605 are ideally suited.

Cap screws and guide bushes are included.

see also...
- *Ball point screws GN 605 → Page 524*

How to order		
GN 867-12-M10-E (1 2 3)	1	b
	2	d_1
	3	Type

Static holders

for clamping bolts

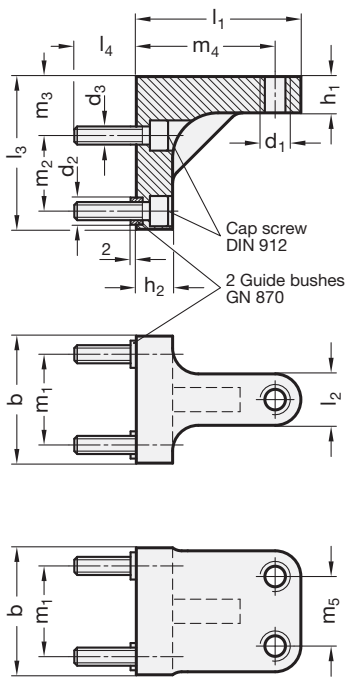

Mounting examples

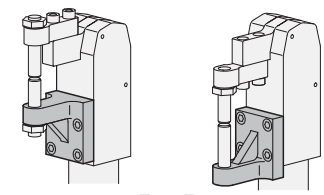

Type **E**

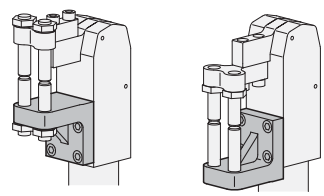

Type **Z**

3 Type

E for one clamping bolt
Z for two clamping bolts

1 b −0,2	2 d_1	d_2 H8/h6	d_3	h_1	h_2	l_1	l_2	l_3	l_4	m_1	m_2	m_3	m_4	m_5
32	M 8	7	M 5	10	10	38	17	37	7,5	22	17	15	31,5	17
42	M 10	9	M 6	12	12	54,5	17	50,5	10	30	25	19,5	45,9	23
52	M 12	11	M 8	14	14	63	17	61	13,5	37	30	23,5	53	30
62	M 12	13	M 10	16	16	73,5	20	83	13,5	44	47	27	63,5	40

Specification

- Steel C45
  blackened
- *ISO-Fundamental Tolerances → Page 1132*
- RoHS compliant

Information

The static holders GN 867.1 have been designed for use with power clamps GN 864.

Static holders with two clamping bolts (Type Z) are preferably used for rigid clamping of sheet metal components. For the same purpose ball point screws GN 605 with serrated ball pads are also suitable.

Cap screws and guide bushes are included.

see also...

- *Ball point screws GN 605 → Page 524*

How to order		
GN 867.1-42-M10-Z (1 2 3)	1	b
	2	d_1
	3	Type

Holders for clamping jaws

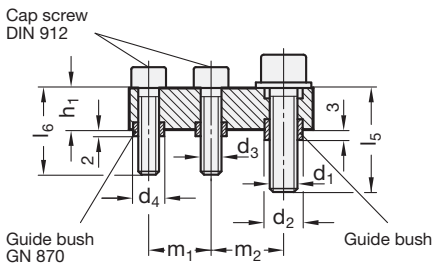

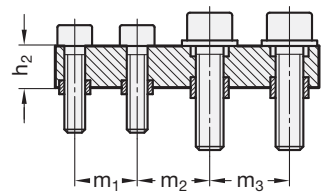

2 Type

- **R** Clamping jaws at right angle to clamping arm
- **P** Clamping jaws parallel to clamping arm

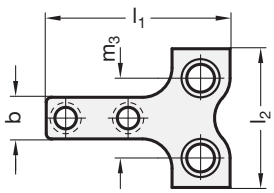

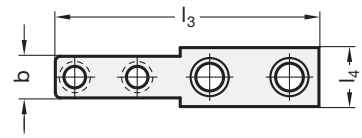

Mounting examples

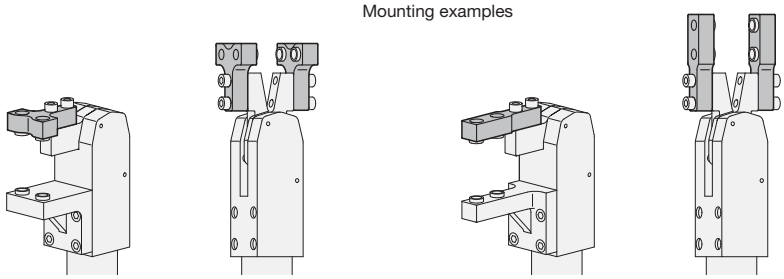

1

b −0,2	d_1	d_2 H8 h6	d_3	d_4 H8 h6	h_1	h_2	l_1	l_2	l_3	l_4	l_5	l_6	m_1	m_2	m_3
10	M 6	9	M 5	7	10	10	37	30	54	13	18,5	19,5	12	14,5	17
12	M 8	11	M 6	9	12	14	53	40	76	17	23,5	29,5	18	20,9	23
16	M 10	13	M 8	11	14	16	63	50	93	20	28	34	22	23,5	30
18	M 10	13	M 10	13	16	18	73	60	113	20	28	34	27	28,5	40

Specification

- Steel C45 blackened
- *ISO-Fundamental Tolerances → Page 1132*
- RoHS compliant

Information

The clamping jaw holders GN 868 are suitable for the clamping arms of the power clamps GN 864 / GN 865 / GN 866 / GN 866.1.

Clamping jaw holders are equally precisely positioned on the clamping arm as are the clamping jaws GN 872 on the holders themselves.

Cap screws and guide bushes are included.

see also...

- *Clamping jaws blank GN 872 → Page 788*

How to order		
GN 868-16-R (1 2)	1	b
	2	Type

Holders for clamping jaws

Static holders

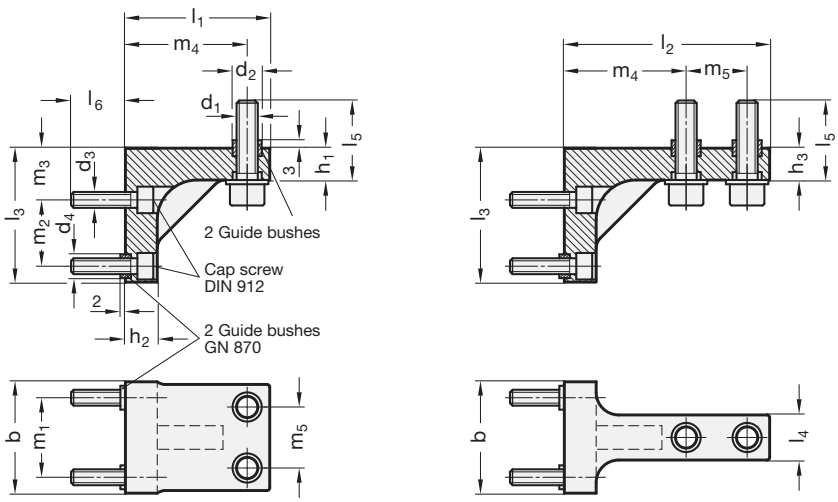

2 Type

R Clamping jaws at right angle to clamping arm

P Clamping jaws parallel to clamping arm

Mounting examples

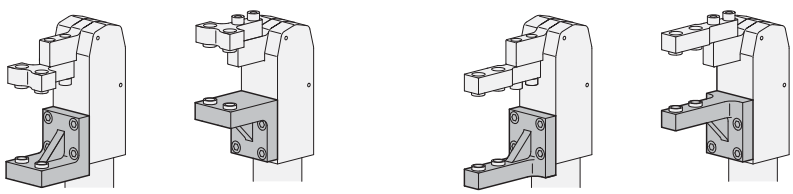

1

b −0,2	d1	d2 H8 h6	d3	d4 H8 h6	h1	h2	h3	l1	l2	l3 Type R	l3 Type P	l4	l5 Type R	l5 Type P	l6	m1	m2	m3	m4	m5
32	M 6	9	M 5	7	10	10	10	38	55	37	37	13	18,5	18,5	7,5	22	17	15	31,5	17
42	M 8	11	M 6	9	12	12	14	54,5	77,5	50,5	50,5	17	23,5	23,5	10	30	25	19,5	45,9	23
52	M 10	13	M 8	11	14	14	16	63	93	61	61	20	28	28	13,5	37	30	23,5	53	30
62	M 10	13	M 10	13	16	16	18	73,5	113,5	83,5	85,5	20	27	29	13,5	44	47	27	62,5	40

Specification

- Steel C45 blackened
- *ISO-Fundamental Tolerances → Page 1132*
- RoHS compliant

Information

The holders for clamping jaws GN 868.1 have been designed for use with power clamps GN 864.

Clamping jaw holders are equally precisely positioned on the clamping arm as are the clamping jaws GN 872 on the holders themselves.

Cap screws and guide bushes are included.

see also...

- *Clamping jaws blank GN 872 → Page 788*

How to order		
GN 868.1-42-P (1 2)	1	b
	2	Type

Static holders

for clamping bolts

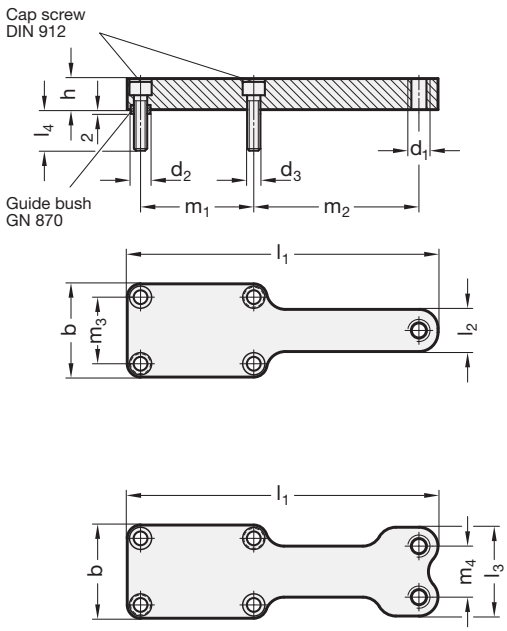

Mounting examples

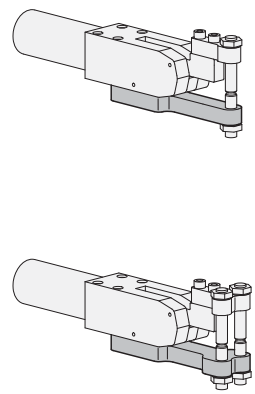

2 Type

E for one clamping bolt
Z for two clamping bolts

1

b	d_1	d_2 H8 h6	d_3	h	l_1	l_2	l_3	l_4	m_1	m_2	m_3	m_4
32	M 8	7	M 5	10	98,5	15	30	8	34	53	22	17
42	M 10	9	M 6	14	140	19	40	8,5	51	74,4	30	23
52	M 12	11	M 8	16	168	22	50	12,5	62	88,5	37	30
62	M 12	13	M 10	18	192,5	22	60	12,5	71,5	102	44	40

Specification

- Steel C45
  blackened
- *ISO-Fundamental Tolerances → Page 1132*
- RoHS compliant

Information

The static holders GN 869.1 have been designed for use with power clamps GN 865.

Static holders for two clamping bolts (Type Z) are preferably used in such applications where absolutely rigid clamping of a sheet metal component is essential. For the same purpose ball point screws with serrated ball pads GN 605 are ideally suited.

Cap screws and guide bushes are included.

see also...

- *Ball point screws GN 605 → Page 524*

How to order		
GN 869.1-52-E (1 2)	1	b
	2	Type

Holders for clamping jaws

Static holder

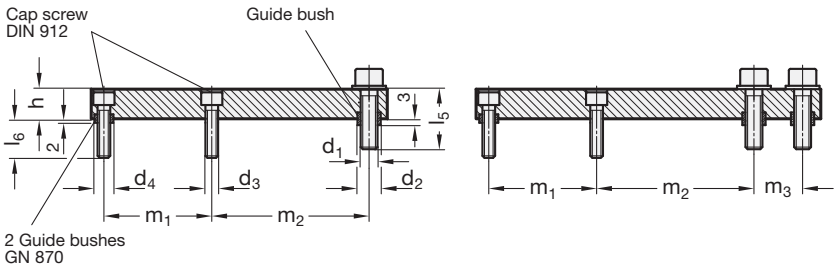

2 Type

R Clamping jaws at right angle to clamping arm

P Clamping jaws parallel to clamping arm

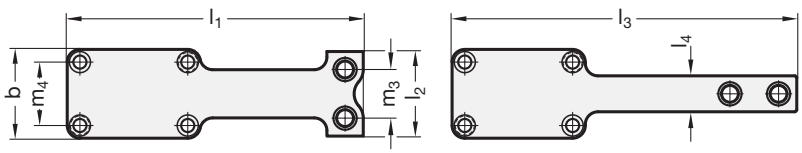

Mounting examples

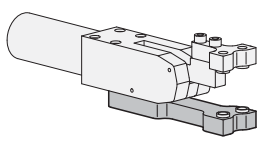

Type **R**

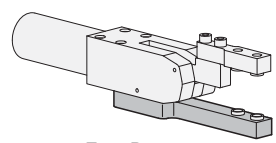

Type **P**

1

b –0,2	d_1	d_2 H8 h6	d_3	d_4 H8 h6	h	l_1	l_2	l_3	l_4	l_5	l_6	m_1	m_2	m_3	m_4
32	M 6	9	M 5	7	10	98,5	30	115,5	13	18,5	8	34	53	17	22
42	M 8	11	M 6	9	14	140	40	163	17	23,5	8,5	51	74,4	23	30
52	M 10	13	M 8	11	16	168	50	198	20	28	12,5	62	88,5	30	37
62	M 10	13	M 10	13	18	192,5	60	232,5	20	28	12,5	71,5	102	40	44

Specification

- Steel C45 blackened
- *ISO-Fundamental Tolerances → Page 1132*
- RoHS compliant

Information

The holders for clamping jaws GN 869.2 have been designed for use with power clamps GN 865.

Clamping jaw holders are equally precisely positioned on the clamping arm as are the clamping jaws GN 872 on the holders themselves.

Cap screws and guide bushes are included.

see also...

- *Clamping jaws blank GN 872 → Page 788*

How to order		
GN 869.2-32-R (1 2)	1	b
	2	Type

GN 872 Clamping jaws blank

for Power clamps GN 864 / GN 865 / GN 866 / GN 866.1

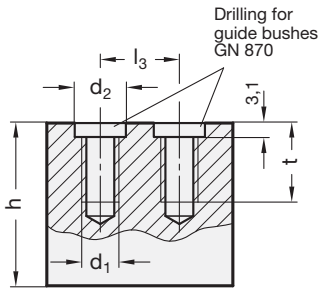

Mounting examples

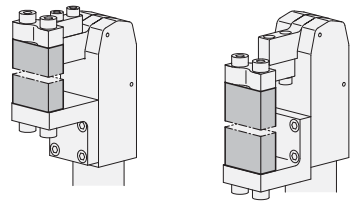

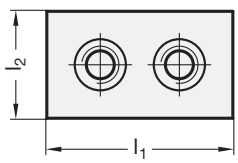

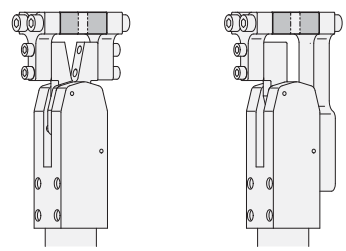

1 l_1	2 h		d_1	d_2 H8 h6	l_2	l_3 ±0,01	t
30	25	50	M 6	9	13	17	8
40	35	70	M 8	11	17	23	12
50	45	80	M 10	13	20	30	15
60	50	85	M 10	13	20	40	15

Specification

- Steel C45
  blackened
- *ISO-Fundamental Tolerances → Page 1132*
- RoHS compliant

Accessory

- Guide bushes → *Page 792*

Information

Clamping jaws blank GN 872 are manufactured to meet the dimensions of the accessories for clamping arms and static holders.

Guide bushes GN 870 are **not** included.

How to order		
GN 872-50-80 (1 = l_1, 2 = h)	1	l_1
	2	h

Levelling shims

for clamping jaws (Power clamps-Accessories)

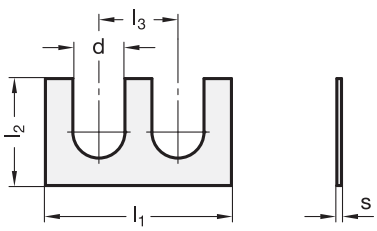

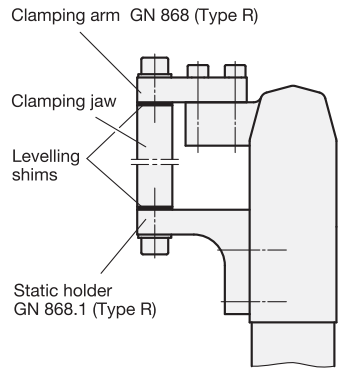

1

l_1	s					d	l_2	l_3
30	0,1	0,2	0,3	0,5	1	9,2	13	17
40	0,1	0,2	0,3	0,5	1	11,2	17	23
50	0,1	0,2	0,3	0,5	1	13,2	20	30
60	0,1	0,2	0,3	0,5	1	13,2	20	40

Specification

- Steel
  blackened
- RoHS compliant

Information

Levelling shims GN 871 are used to correct any discrepancy in the alignment of the two clamping jaw levels.

This facilitates in a simple way the optimum clamping position of the jaws, i. e. also the optimal clamping force.

The levelling shims are only available as a complete set of five of different thicknesses for each size.

How to order		
1 GN 871-40	1	l_1

Collar clamps

for power clamps GN 864 / GN 865 / GN 866 / GN 866.1

Drilling for cap screw DIN 912

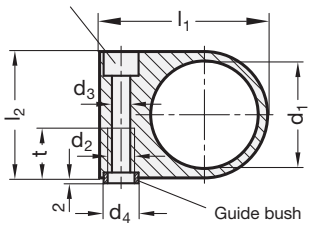

Shaft clamping unit

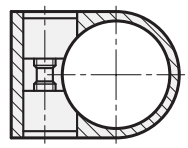

Mounting examples

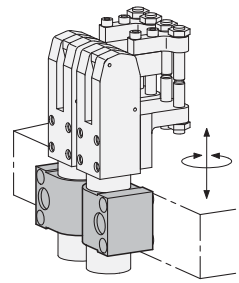

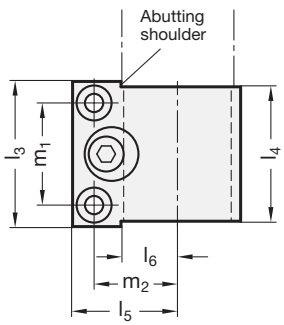

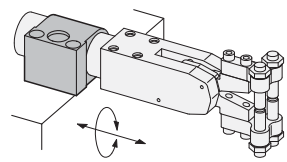

1

d_1	d_2	d_3	d_4 H8 h6	l_1	l_2	l_3	l_4	l_5	l_6	m_1	m_2	t
28	M 8	6,5	11	52	34	39	36	35	16	26	28,5	14
40	M 10	8,5	13	62,5	47	54	51	39	21	38	31	18,5
50	M 12	10,5	16	76	58	64	61	47	26	45	37,5	21
60	M 12	10,5	16	86	68	69	66	52	31	50	42,5	18

Specification

- Steel C45
  blackened
- *ISO-Fundamental Tolerances → Page 1132*
- RoHS compliant

Information

The collar clamps GN 873 greatly increases the mounting possibilities and, with that, the field of applications for power clamps is vastly increased.

The abutting shoulder can be used for precise positioning of the power clamps thus allowing a problem free exchange of the latter.

The use of the two guide bushes ensures an exact and stable installation of the collar clamp as well as the power clamp.

Other collar clamps for the sizes d_1 = 40 (piston Ø 20) and d_1 = 50 (piston Ø 40) are shown under the tube clamp connector range.

Guide bushes are included.

see also...
- *Guide bushes GN 870 → Page 792*

How to order		
1 GN 873-40	1	d_1

Power clamps GN 864 → *Page 774*
Power clamps GN 865 → *Page 776*
Power clamps GN 866 → Page 778
with different accessory

Guide bushes

for power clamps / Accessory

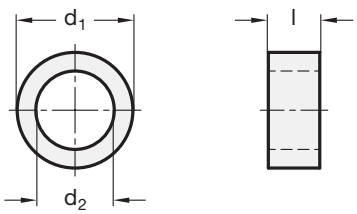

Examples of application

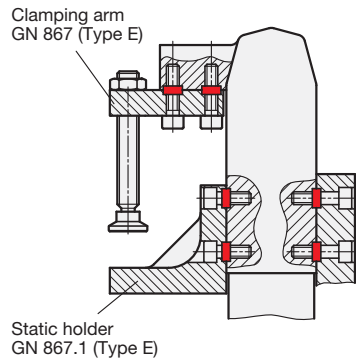

1

d_1 h6	d_2	Length l
7	5,1	4
9	6,1	4
11	8,1	4
13	10,1	4

Specification

- Steel
  blackened
- *ISO-Fundamental Tolerances → Page 1132*
- RoHS compliant

Information

Guide bushes GN 870 ensure accurate location of the clamping jaws and static holders, as well as the power clamps.

At the same time they absorb side thrust and eliminate excessive load on the mounting screws.

How to order		
1 GN 870-11	1	d_1

Proximity switches

for power clamps, inductive sensor

GN 893.1

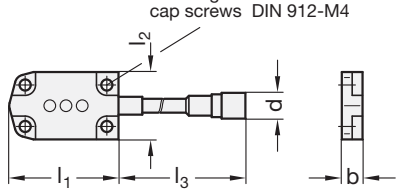

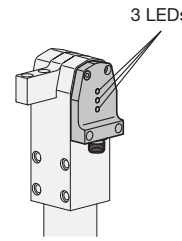

GN 893.2
GN 893.3
GN 893.4

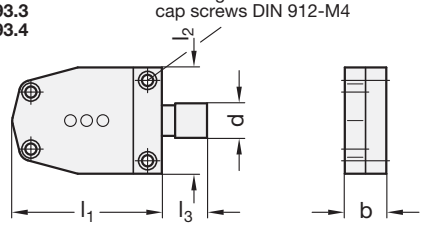

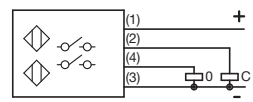

Power clamps	Proximity switch Type	b	d Connector 4-pole	l_1 –0,2	l_2	l_3
GN 864-20-BL	GN 893.1	8	M12x1	42	26	110 (PVC cable)
GN 864-32-BL	GN 893.2	16	M12x1	57,5	41	10
GN 864-40-BL	GN 893.3	16	M12x1	73	48	10
GN 864-50-BL	GN 893.4	16	M12x1	73	48	10
GN 865-20-BI	GN 893.1	8	M12x1	42	26	110 (PVC cable)
GN 865-32-BI	GN 893.2	16	M12x1	57,5	41	10
GN 865-40-BI	GN 893.3	16	M12x1	73	48	10
GN 865-50-BI	GN 893.4	16	M12x1	73	48	10
GN 866-20-BC	GN 893.1	8	M12x1	42	26	110 (PVC cable)
GN 866-32-BC	GN 893.2	16	M12x1	57,5	41	10
GN 866-40-BC	GN 893.3	16	M12x1	73	48	10
GN 866.1-20-BE	GN 893.1	8	M12x1	42	26	110 (PVC cable)
GN 866.1-32-BE	GN 893.2	16	M12x1	57,5	41	10
GN 866.1-40-BE	GN 893.3	16	M12x1	73	48	10

Specification

- Voltage range: 10 to 30 VDC
- Switch load: 0 to 100 mA
- Voltage drop: ≤ 2 V
- Temperature range: 0 °C to 50 °C
- Protection class: IP 65
- LED-Indication
  - green: operating voltage
  - red: switch position closed
  - yellow: switch position open
- RoHS compliant

Accessory

- Cable with connector 4-pole, 5 or 10 meters long:
  - GN 330-M12x1-4-G-5
  - GN 330-M12x1-4-G-10

Information

With this proximity switch GN 893.1 to GN 893.4 power clamps can induce controlled signals whereby the LEDs indicate the operating and switch positions.

The proximity switches can be screwed directly on to the power clamps. The position of the switches can be on either side.

A Plastic intermediate plate and two cap screws M4 are included.

see also...
- *IP Protection classes → Page 1137*

How to order		
GN 893.2	1	Code

Hook clamps

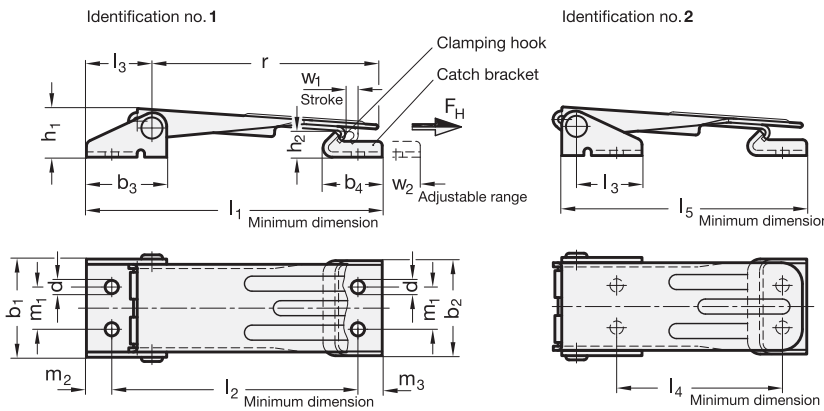

Inox Stainless Steel

2 Type

- **A** without safety catch
- **S** with safety catch
- **SV** for safety catch with padlock
- **SS** with lock

4 Identification No.

- **1** long Type
- **2** short Type

1

Size	F_H in N Holding force	b_1	b_2	b_3	b_4	h_1	h_2	h_3	h_4	l_1 min. Identification No. 1 Type A Type SV	l_1 min. Identification No. 1 Type S Type SS	l_2 min. Identification No. 1 Type A Type SV	l_2 min. Identification No. 1 Type S Type SS
400	4000	46,5	45	38	27	22	12	28,5	32,5	144	147	120,5	123,5

Size	l_3	l_4 min. Identification No. 2 Type A Type SV	l_4 min. Identification No. 2 Type S Type SS	l_5 min. Identification No. 2 Type A Type SV	l_5 min. Identification No. 2 Type S Type SS	d	m_1	m_2	m_3	r	w_1 ≈ Stroke	w_2 ≈ Adjustable range Type A Type SV	w_2 ≈ Adjustable range Type S Type SS
400	32	80,5	83,5	118	121	6,3	20	12	11,5	107,5	6,5	15	8

Specification

3

- Steel **ST**
  zinc plated, blue passivated
- Stainless Steel **NI**
  only Type A, S and SV
  - Parts in sheet metal AISI 305
  - Clamping hook / pin AISI 303
- *Stainless Steel characteristics → Page 1144*
- RoHS compliant

Information

Hook clamps GN 821 are used among others for the secure holding of flaps and container lids. The clamps will lock securely over the centre and are thus vibration proof.

The stroke w_1 of the clamping hook can pull the parts to be clamped together by up to 6 mm. The range w_2 can be adjusted on the M6 threaded spindle at the clamping hook.

The types S, SV and SS prevent unwanted release of the hook clamp.

In the standard version the hook clamps of type SS have the same lock and / or the same key.

The load specified in the table are simply guide line values for a nominal static pulling force which the lock can withstand. Depending on the conditions under which these hook lock clamps are used such as vibration or shock loads, the holding capacity can be adversely affected.

The catch bracket is included.

see also...
- *Hook clamps GN 851 → Page 726*

How to order		
1 2 3 4 GN 821-400-SV-NI-2	1	Size
	2	Type
	3	Material
	4	Identification No.

Type **A**
without safety catch

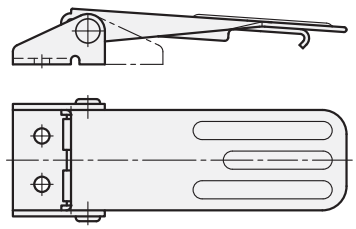

Type **S**
with safety catch

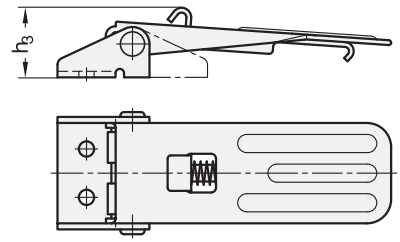

Type **SV**
for safety with padlock

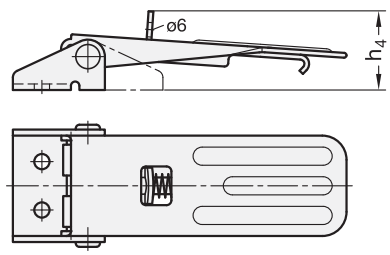

Type **SS**
with lock

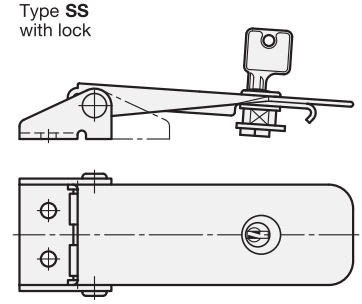

Hook clamps

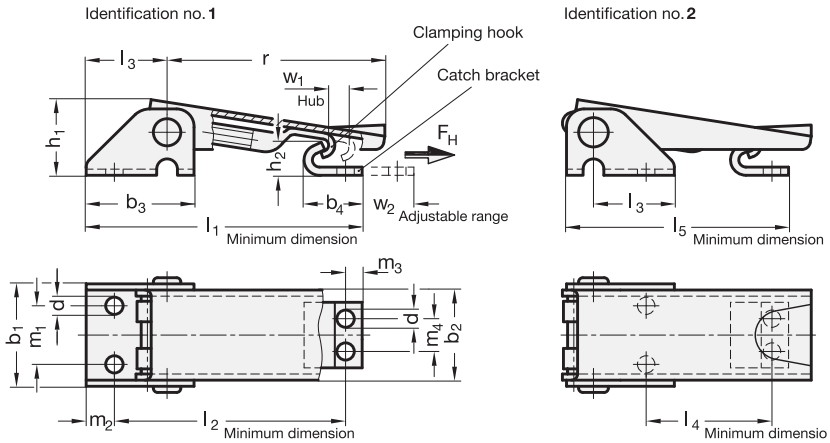

Inox Stainless Steel

2 Type

- **A** without safety catch
- **S** with safety catch
- **SV** for safety catch with padlock

4 Identification No.

- **1** long Type
- **2** short Type

1

Size	F_H in N Holding force	b_1	b_2	b_3	b_4	d	h_1	h_2	h_3	h_4	l_1 min. Identification No. 1 Type A Type SV	l_1 min. Identification No. 1 Type S	l_2 min. Identification No. 1 Type A Type SV	l_2 min. Identification No. 1 Type S
100	1000	25,5	22	26	14	4,2	18,5	8,5	21,5	25,5	67	74	56	63

Size	l_3	l_4 min. Identification No. 2 Type A Type SV	l_4 min. Identification No. 2 Type S	l_5 min. Identification No. 2 Type A Type SV	l_5 min. Identification No. 2 Type S	m_1	m_2	m_3	m_4	r	w_1 ≈ Stroke	w_2 ≈ Adjustable range Type A Type SV	w_2 ≈ Adjustable range Type S
100	19,5	31	38	54	61	14,3	7	4	8	51	5,5	12	8

Specification

3

- Steel **ST**
  zinc plated, blue passivated
- Stainless Steel **NI**
  - Parts in sheet metal AISI 304
  - Clamping hook / Pin AISI 303
- *Stainless Steel characteristics → Page 1144*
- RoHS compliant

Information

Hook clamps GN 831 are used among others for the secure holding of flaps and container lids. The clamps will lock securely over the centre and are thus vibration proof.

The stroke w_1 of the clamping hook can pull the parts to be clamped together by up to 6 mm. The range w_2 can be adjusted on the M6 threaded spindle at the clamping hook.

The types S and SV prevent unwanted release of the hook clamp.

Screws with low head height such as DIN 6912 are used to fix the hook clamps.

The load specified in the table are simply guide line values for a nominal static pulling force which the lock can withstand. Depending on the conditions under which these hook lock clamps are used such as vibration or shock loads, the holding capacity can be adversely affected.

The catch bracket is included part of the order.

How to order		
GN 831-100-SV-ST-2 (1 2 3 4)	1	Size
	2	Type
	3	Material
	4	Identification No.

Type **A**
without safety catch

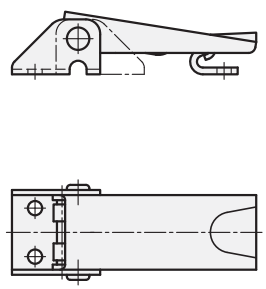

Type **S**
with safety catch

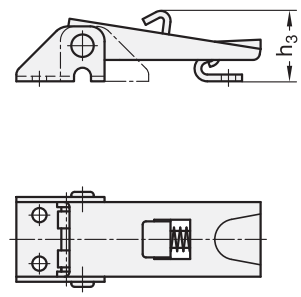

Type **SV**
for safety with padlock

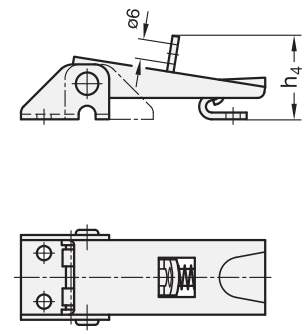

Hook clamps

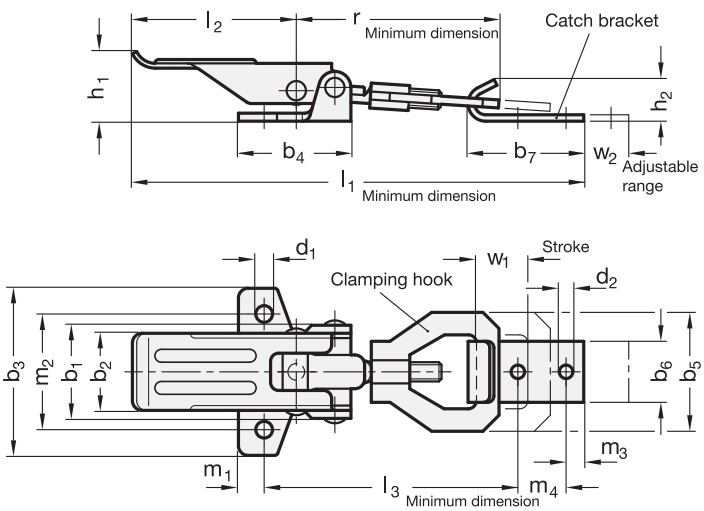

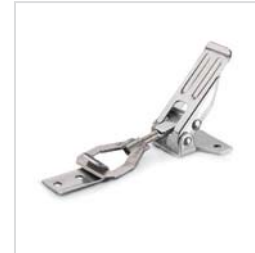

Inox Stainless Steel

Size	F_H in N Holding force	b_1	b_2	b_3	b_4	b_5	b_6	b_7	d_1	d_2	h_1 ≈
110	1100	30	24	52	35	37	19	36	5,2	4,2	22

Size	h_2	l_1 min.	l_2	l_3 min.	m_1	m_2	m_3	m_4	r ≈	w_1 ≈ Stroke	w_2 ≈ Adjustable range
110	13	140	51	78	8	36	5,5	15	63	16	12

Specification

- Steel zinc plated, blue passivated — **ST**
- Stainless Steel AISI 304 — **NI**
- *Stainless Steel characteristics → Page 1144*
- RoHS compliant

Information

Hook clamps GN 831.1 are used for the secure holding of flaps, container lids, machine coverings and similar applications. The clamping stroke exceeds the dead centre point which makes them vibration proof.

Due to the movement sequence of the mechanics in the clamping hook, components to be linked can be pulled towards each other over a distance of up to 15 mm. The adjustable range w_2 is achieved via a threaded spindle M6 on the clamping hook.

The loads specified in the above table are simply guide line values for a nominal static pulling force which the lock can withstand. Depending on the conditions under which these hook clamps are used such as vibration or shock loads, the pulling force can be adversely affected.

The catch bracket is included part of the order.

How to order		
GN 831.1-110-NI (1 2)	1	Size
	2	Material

Hook clamps

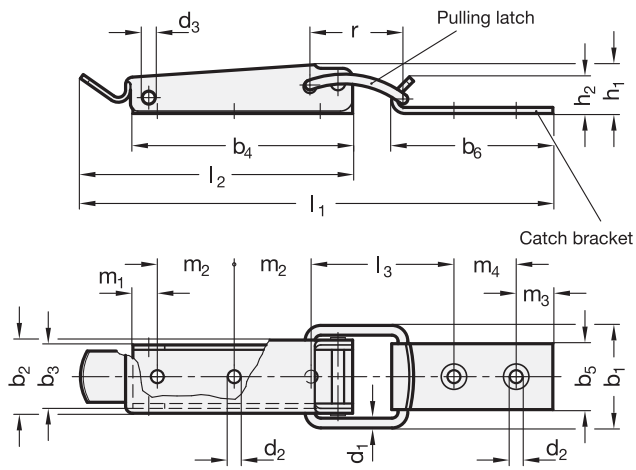

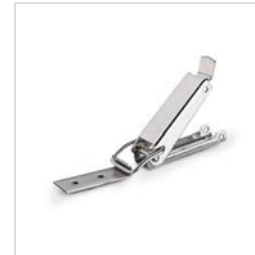

Rost frei — Inox Stainless Steel

Size	F_H in N Holding force	b_1	b_2	b_3	b_4	b_5	b_6	d_1	d_2	d_3
55	550	23	17	14	44	13	30	2	3,2	2,6
200	2000	43	30	26	90	27	66	4	5,3	5,3

Size	h_1	h_2 ≈	l_1 ≈	l_2	l_3 ≈	m_1	m_2	m_3	m_4	r ≈
55	11	9	102	60	34	9,5	12,5	5	12	26
200	19	15	191	111	57,5	10	31,5	15	25,5	36

Specification

- Steel zinc plated, blue passivated — **ST**
- Stainless Steel AISI 304 — **NI**
- *Stainless Steel characteristics* → *Page 1144*
- RoHS compliant

Information

Hook clamps GN 832 are used for the secure holding of flaps, container lids, machine coverings and similar applications. The clamping stroke exceeds the dead centre point which makes them vibration proof.

Due to the elasticity of the pulling latch the components to be linked are held in position.

The loads specified in the above table are simply guide line values for a nominal static pulling force which the lock can withstand. Depending on the conditions under which these hook clamps are used such as vibration or shock loads, the pulling force can be adversely affected.

The driling d_3 can be fitted with a safety pin to immobilise the closed hook clamps so that they cannot be released inadvertently.

The catch bracket is included part of the order.

How to order		
GN 832-200-ST (1 = Size, 2 = Material)	1	Size
	2	Material

Hook clamps

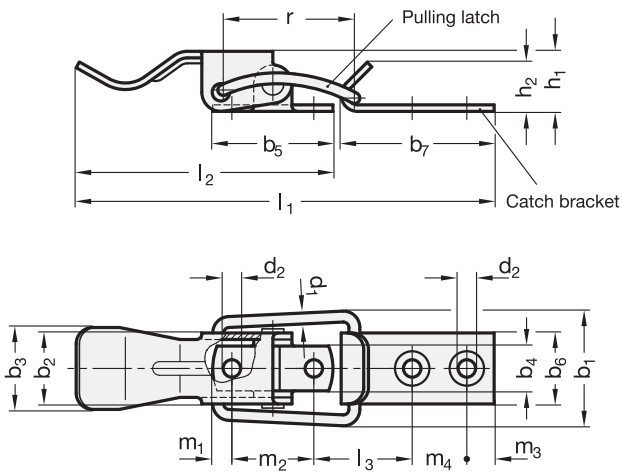

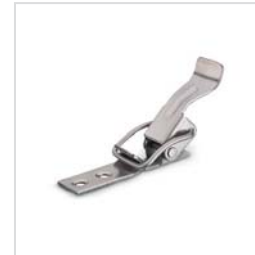

Rost frei — Inox Stainless Steel

1

Size	F_H in N Holding force	b_1	b_2	b_3	b_4	b_5	b_6	b_7	d_1	d_2
40	400	21	13	15	8	22	13	28	2	3,2

Size	h_1	h_2	l_1 ≈	l_2	l_3 ≈	m_1	m_2	m_3	m_4	r ≈
40	11	9	76	47	17	3,5	15	5	10	24

Specification

2

- Steel zinc plated, blue passivated — **ST**
- Stainless Steel AISI 304 — **NI**
- *Stainless Steel characteristics* → *Page 1144*
- RoHS compliant

Information

Hook clamps GN 832.1 are used for the secure holding of flaps, container lids, machine coverings and similar applications. The clamping stroke exceeds the dead centre point which makes them vibration proof.

Due to the elasticity of the pulling latch the compo-nents to be linked are held in position.

The loads specified in the above table are simply guide line values for a nominal static pulling force which the lock can withstand. Depending on the conditions under which these hook clamps are used such as vibration or shock loads, the pulling force can be adversely affected.

The catch bracket is included part of the order.

How to order		
GN 832.1-40-NI (1 = Size, 2 = Material)	1	Size
	2	Material

Steel and Stainless Steel Hook clamps

Hook clamps

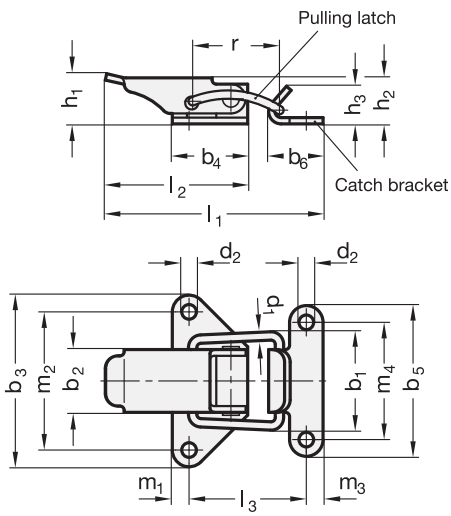

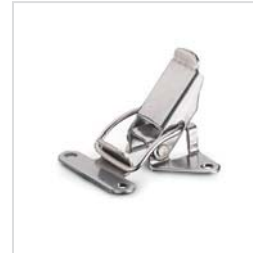

Rost frei — Inox Stainless Steel

Size	F_H in N Holding force	b_1	b_2	b_3	b_4	b_5	b_6	d_1	d_2	h_1
55	550	23	15	41	18	36	13	2	3,5	12

Size	h_2	h_3	l_1 ≈	l_2	l_3 ≈	m_1	m_2	m_3	m_4	r ≈
55	11	9	52	34	29	4	33	4	28	21

Specification

- Steel zinc plated, blue passivated — **ST**
- Stainless Steel AISI 304 — **NI**
- *Stainless Steel characteristics → Page 1144*
- RoHS compliant

On request

- Version without bores, for welding, blank

Information

Hook clamps GN 832.2 are used for the secure holding of flaps, container lids, machine coverings and similar applications. The clamping stroke exceeds the dead centre point which makes them vibration proof.

Due to the elasticity of the pulling latch the components to be linked are held in position.

The loads specified in the above table are simply guide line values for a nominal static pulling force which the lock can withstand. Depending on the conditions under which these hook clamps are used such as vibration or shock loads, the pulling force can be adversely affected.

The catch bracket is included part of the order.

How to order		
GN 832.2-55-NI	1	Size
	2	Material

Hook clamps

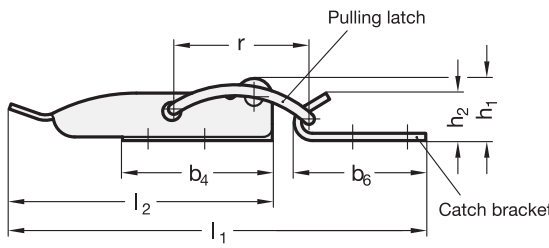

Inox Stainless Steel

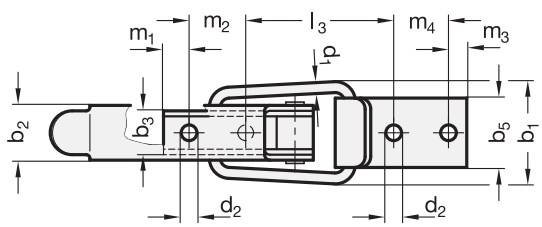

1

Size	F_H in N Holding force	b_1	b_2	b_3 −0,5	b_4	b_5	b_6	d_1	d_2	h_1
100	1000	28	15	12	41	19	36	3	4,3	17

Size	h_2	l_1 ≈	l_2	l_3 ≈	m_1	m_2	m_3	m_4	r ≈
100	13	114	72	40	7	15,5	5	15	37

Specification

2

- Steel zinc plated, blue passivated **ST**
- Stainless Steel AISI 304 **NI**
- *Stainless Steel characteristics → Page 1144*
- RoHS compliant

Information

Hook clamps GN 832.3 are used for the secure holding of flaps, container lids, machine coverings and similar applications. The clamping stroke exceeds the dead centre point which makes them vibration proof.

Due to the elasticity of the pulling latch the components to be linked are held in position.

The loads specified in the above table are simply guide line values for a nominal static pulling force which the lock can withstand. Depending on the conditions under which these hook clamps are used such as vibration or shock loads, the pulling force can be adversely affected.

The catch bracket is included part of the order.

How to order		
GN 832.3-100-NI (1 = Size, 2 = Material)	1	Size
	2	Material

Hook clamps

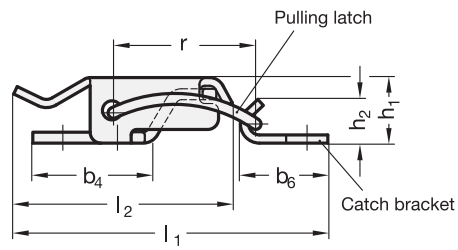

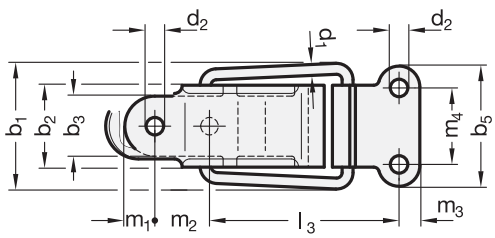

Inox Stainless Steel

Size	F_H in N Holding force	b_1	b_2 +0,5	b_3	b_4 ≈	b_5	b_6 ≈	d_1	d_2	h_1
55	550	23	15	11	25	22	16	2	3,2	12

Size	h_2	l_1 ≈	l_2 –1	l_3 ≈	m_1	m_2	m_3	m_4	r ≈
55	8	57	40	34,5	5,5	10	3,8	14	26

Specification

- Steel zinc plated, blue passivated **ST**
- Stainless Steel AISI 304 **NI**
- *Stainless Steel characteristics* → *Page 1144*
- RoHS compliant

Information

Hook clamps GN 832.4 are used for the secure holding of flaps, container lids, machine coverings and similar applications. The clamping stroke exceeds the dead centre point which makes them vibration proof.

Due to the elasticity of the pulling latch the components to be linked are held in position.

The loads specified in the above table are simply guide line values for a nominal static pulling force which the lock can withstand. Depending on the conditions under which these hook clamps are used such as vibration or shock loads, the pulling force can be adversely affected.

The catch bracket is included part of the order.

How to order		
GN 832.4-55-ST	1	Size
	2	Material

Hook clamps

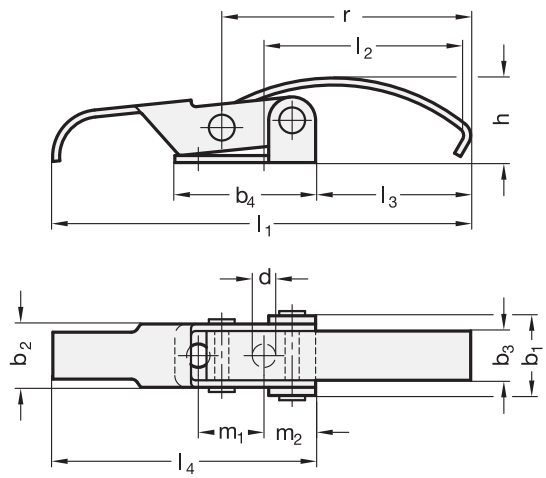

Inox
Stainless
Steel

1

Size	F_H in N Holding force	b_1	b_2	b_3	b_4	d	h ±1
50	500	17	13,5	10	30	5,1	18

Size	l_1	l_2 ±0,5	l_3	l_4	m_1	m_2	r
50	89	43	33	56	14	11	53

Specification

2

- Steel zinc plated, blue passivated **ST**
- Stainless Steel AISI 304 **NI**
- *Stainless Steel characteristics* → *Page 1144*
- RoHS compliant

Information

Hook clamps GN 833 are used for the secure holding of flaps, container lids, machine coverings and similar applications. The clamping stroke exceeds the dead centre point which makes them vibration proof.

Due to the elasticity of the pulling latch the components to be linked are held in position.

The loads specified in the above table are simply guide line values for a nominal static pulling force which the lock can withstand. Depending on the conditions under which these hook clamps are used such as vibration or shock loads, the pulling force can be adversely affected.

How to order		
GN 833-50-ST (1 2)	1	Size
	2	Material

2.5 Levelling feet Hinges Latches

GN 343.1
Levelling feet
Steel
ESD
→ Page 812

GN 343.8
Levelling feet
Plastic / Stainless Steel
Rost frei
→ Page 815

GN 342.2
Levelling feet
with vibration damping
Steel
→ Page 820

GN 343.2
Levelling feet
Steel
ESD
→ Page 812

GN 638
Ball jointed levelling feet
Plastic / Steel
→ Page 816

GN 340
Levelling feet
Inch
→ Page 822

GN 343.3
Levelling feet
Plastic / Steel
→ Page 813

GN 638
Ball jointed levelling feet
Plastic / Stainless Steel
Rost frei
→ Page 816

GN 340.5
Levelling feet
Stainless Steel
Rost frei
Inch
→ Page 822

GN 343.4
Levelling feet
Plastic / Steel
→ Page 813

GN 638
Ball jointed levelling feet
Stainless Steel
Rost frei
→ Page 816

GN 340
Levelling feet
Inch
→ Page 824

GN 343.5
Levelling feet
Stainless Steel
ESD
Rost frei
→ Page 814

GN 6311.4
Levelling feet
Steel
→ Page 818

GN 340.5
Levelling feet
Stainless Steel
Rost frei
Inch
→ Page 824

GN 343.6
Levelling feet
Stainless Steel
ESD
Rost frei
→ Page 814

GN 339
Levelling feet
→ Page 819

GN 340.1
Levelling feet
with fixing lug
→ Page 826

GN 343.7
Levelling feet
Plastic / Stainless Steel
Rost frei
→ Page 815

GN 342.1
Levelling feet
with vibration damping
Steel
→ Page 820

GN 340.6
Levelling feet
with fixing lug
Stainless Steel
Rost frei
→ Page 826

Stainless Steel | Ergostyle | Softline | Cleanline | Sanline | ATEX | ESD | Inch

GN 341
Levelling feet
Stainless Steel
rubber underlay
black or white

→ Page 828

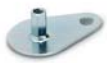

GN 440.1
Levelling feet
with fixing lug

→ Page 834

GN 992
Insert bushes
Aluminium

→ Page 843

GN 341.1
Levelling feet
Stainless Steel
rubber underlay
black

→ Page 829

GN 440.6
Levelling feet
with fixing lug
Stainless Steel

→ Page 834

GN 992.5
Insert bushes
Stainless Steel

→ Page 843

GN 341.2
Levelling feet
Stainless Steel
rubber underlay
white

→ Page 829

GN 440.1
Levelling feet
with fixing lug

→ Page 836

GN 349
Threaded mounting plates
for levelling feet

→ Page 844

GN 440
Levelling feet

→ Page 830

GN 440.6
Levelling feet
with fixing lug
Stainless Steel

→ Page 836

GN 218
Cam latches

→ Page 845

GN 440.5
Levelling feet
Stainless Steel

→ Page 830

GN 148
Levelling feet
with vibration damping element

→ Page 838

GN 117
Latches

→ Page 846

GN 440
Levelling feet

→ Page 832

GN 148.2
Rubber pads
for levelling feet
GN 148

→ Page 841

GN 119
Latches

→ Page 848

GN 440.5
Levelling feet
Stainless Steel

→ Page 832

GN 348
Insert bushes
Plastic

→ Page 842

GN 119
Latches
Stainless Steel

→ Page 850

Stainless Steel | Ergostyle | Softline | Cleanline | Sanline | ATEX | ESD | Inch

GN 516
Rotary clamping latches
Zinc die casting / Steel

→ Page 852

GN 115
Hygienic latches
Stainless Steel

→ Page 863

GN 702
Stop locks
with 4 indexing positions
Zinc die casting

→ Page 871

GN 516.1
Rotary clamping latches
Latch distance adjustable

→ Page 854

GN 115.1
Mini-Latches

→ Page 864

GN 315
Snap locks
Locking distance adjustable

→ Page 872

GN 516.5
Rotary clamping latches
Stainless Steel

→ Page 855

GN 115.6
Mini-Latches
Stainless Steel

→ Page 864

GN 315.1
Snap locks
two locking distances

→ Page 874

GN 116.1
Rotary clamping latches

→ Page 856

GN 115.7
Latches with „U“ handle

→ Page 866

GN 123
Sheet metal punches
for mounting of latches

→ Page 876

GN 115
Latches
not lockable

→ Page 858

GN 120
Protective caps
for latches
Plastic

→ Page 868

GN 337
Hinges
to be unhinged
Zinc die casting

→ Page 877

GN 115
Latches
lockable

→ Page 860

GN 320
Opening handles
for latches
Plastic

→ Page 869

GN 337
Hinges
to be unhinged
Stainless Steel

→ Page 877

GN 115
Latches
Stainless Steel

→ Page 862

GN 119.2
Keys
for latches

→ Page 870

GN 237
Hinges
Zinc die casting, Aluminium

→ Page 878

Stainless Steel | Ergostyle | Softline | Cleanline | Sanline | ATEX | ESD | Inch

GN 237
Hinges
Stainless Steel

→ Page 878

GN 151
Hinges
Plastic

→ Page 884

GN 139.3
Mounting plate
flat
Steel

→ Page 892

GN 237
Hinges
with extended hinge wings
Zinc die casting

→ Page 879

GN 136
Sheet metal hinges

→ Page 885

GN 139.4
Mounting plate
angled
Zinc die casting

→ Page 892

GN 237
Hinges
with extended hinge wings
Stainless Steel

→ Page 879

GN 136
Sheet metal hinges
Stainless Steel

→ Page 885

GN 129
Hinges
Steel

→ Page 893

GN 238
Hinges
adjustable
Zinc die casting

→ Page 880

GN 161
Hinges
for profile systems
Zinc die casting

→ Page 886

GN 128
Hinges
for welding
Steel

→ Page 894

GN 237.1
Hinges
Plastic

→ Page 882

GN 139.1
Hinges with safety switch
Zinc die casting

→ Page 888

GN 128.2
Hinges
for welding
Aluminium / Stainless Steel

→ Page 895

GN 237.1
Hinges
Plastic

→ Page 882

GN 139.2
Hinges
without switch
Zinc die casting

→ Page 888

GN 161.1
Hinges
Zinc die casting

→ Page 896

GN 127
Hinges
adjustable
Zinc die casting

→ Page 883

GN 330
Cables with connector coupling M12x1

→ Page 890

GN 161.2
Hinges
Zinc die casting

→ Page 897

Stainless Steel | Ergostyle | Softline | Cleanline | Sanline | ATEX | ESD | Inch

Levelling feet

Foot, threaded bush / stud steel

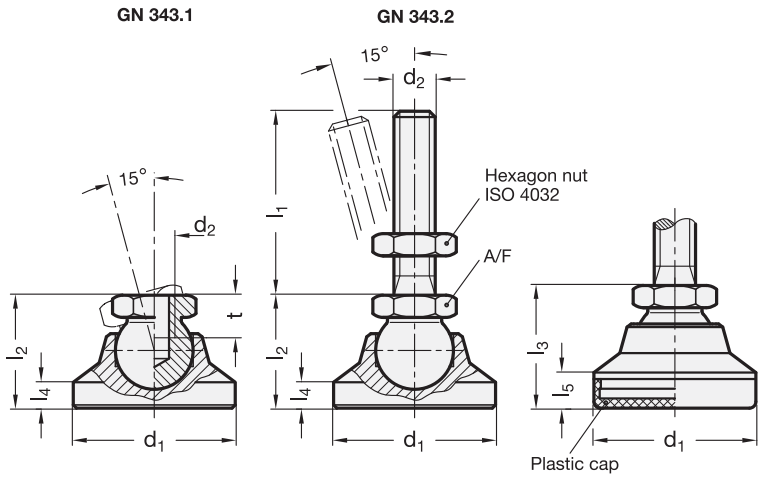

4 Type

- **OS** without plastic cap
- **KS** with plastic cap, gliding
- **KR** with plastic cap, non-gliding
- **KSE** with plastic cap, gliding, electrically conductive (antistatic)
- **KRE** with plastic cap, non-gliding, electrically conductive (antistatic)

1 d_1	2 d_2	3 l_1			l_2	l_3	l_4	l_5	A/F	t min.	Static load in kN for GN 343.2 (see Information)
25	M 6*	-	-	-	19	20,5	4	5,5	12	9	-
25	M 8	40	50	63	19	20,5	4	5,5	12	9	14
32	M 8	40	50	63	23	24,5	5	6,5	12	9	14
32	M 10	50	63	80	23	24,5	5	6,5	15	10,5	23
40	M 10	50	63	80	26	27,5	6	7,5	15	10,5	23
40	M 12	63	80	100	26	27,5	6	7,5	17	11,5	33
50	M 10	50	63	80	28	29,5	7	8,5	15	10,5	23
50	M 12	63	80	100	28	29,5	7	8,5	17	11,5	33
60	M 12	63	80	100	36	37,5	8,5	10	17	11,5	33
60	M 16	80	100	125	36	37,5	8,5	10	24	16	62
60	M 20**	98	138	158	36	37,5	8,5	10	24	-	95
60	M 24**	98	138	158	36	37,5	8,5	10	24	-	95

* only GN 343.1 (female thread) ** only GN 343.2 (threaded stud)

Specification

- Steel
  Tensile strength class 5.8 (500 N/mm²)
  zinc plated, blue passivated
- Type **KS / KSE**
  Plastic cap polyacetal (POM)
  - KS: white (natural colour) RAL 9001
  - KSE: black, electrically conductive
    Surface resistivity: < 10^6 Ω
    Volume resistivity: < 10^7 Ω
    DIN EN 61340-5-1 / 61340-2-3
- Type **KR / KRE**
  Plastic cap elastomer (TPE), 73 shore
  - KR: black
  - KRE: black, electrically conductive
    Surface resistivity: < 10^6 Ω
    Volume resistivity: < 10^7 Ω
    DIN EN 61340-5-1 / 61340-2-3
- RoHS compliant

Information

The static load of the levelling feet GN 343.1 / GN 343.2 is limited by the load capacity of the ball joint / threaded stud (tensile strength class 5.8 (500 N/mm²)). The static load values (only valid for Type OS / KS) in the above table refer to a net vertical load in relation to the levelling foot. Under normal operating conditions side loading or angular loading is not uncommon and the load capacity would be considerably reduced which must be taken into consideration. Levelling feet GN 343.1 / GN 343.2 can not be disassembled.

Levelling foot with female thread

1 2 4

GN 343.1-50-M12-OS

1	d_1
2	d_2
4	Type

Levelling foot with threaded stud

1 2 3 4

GN 343.2-32-M10-50-KR

1	d_1
2	d_2
3	l_1
4	Type

Levelling feet

Foot plastic , threaded bush / stud steel

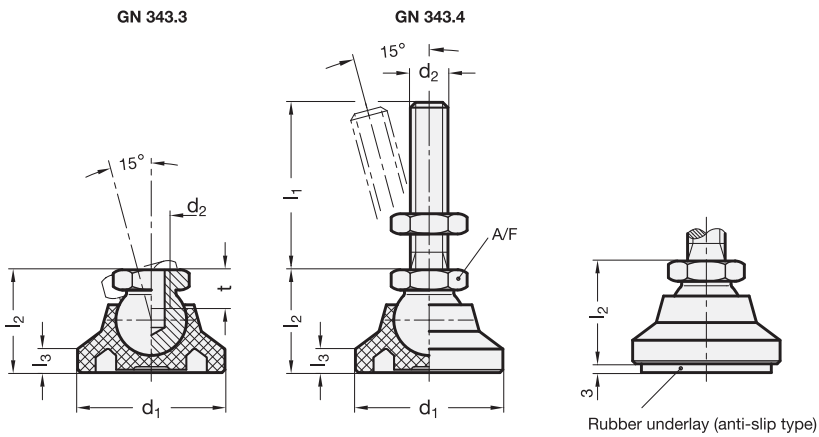

4 Type

A without rubber underlay
G with rubber underlay

1 d_1	2 d_2	3 l_1			l_2	l_3	A/F	t min.	Static load in kN (see information)
25	M 6*	-	-	-	18,5	4	12	9	5
25	M 8	40	50	63	18,5	4	12	9	5
32	M 8	40	50	63	22,5	5	12	9	7
32	M 10	50	63	80	22,5	5	15	10,5	7
40	M 10	50	63	80	25,5	6	15	10,5	10
40	M 12	63	80	100	25,5	6	17	11,5	10
50	M 10	50	63	80	27,5	7	15	10,5	10
50	M 12	63	80	100	27,5	7	17	11,5	10
60	M 12	63	80	100	35,5	8,5	17	11,5	14
60	M 16	80	100	125	35,5	8,5	24	16	14
60	M 20**	98	138	158	35,5	8,5	24	-	14
60	M 24**	98	138	158	35,5	8,5	24	-	14

* only GN 343.3 (female thread) ** only GN 343.4 (threaded stud)

Specification

- Foot: Plastic (Polyamide PA)
  - glass fibre reinforced
  - black, matt
  - temperature resistant up to 100 °C
- Threaded bush / stud: Steel
  - Tensile strength class 5.8 (500 N/mm²)
  - zinc plated, blue passivated
- Hexagon nut ISO 4032:
  Steel zinc plated, blue passivated
- Rubber underlay (NBR)
  70 shore, black
- RoHS compliant

On request

- ESD version
  (conductive plastic cap to avoid electrostatic charging)

Information

Levelling feet GN 343.3 / 343.4 are capable of withstanding high static loads through the use of a high density plastic material coupled with a design which distributes the load over a larger area. Exceeding the static values specified in the above table could lead to failure of the plastic component. The above values have been arrived at by a series of load tests whereby a defined number of levelling feet were subjected to a vertical load over a defined period. Levelling feet GN 343.3 / GN 343.4 are supplied assembled, but are removable.

Levelling foot with female thread		
1 2 4	1	d_1
GN 343.3-32-M10-A	2	d_2
	4	Type

Levelling foot with threaded stud		
1 2 3 4	1	d_1
GN 343.4-60-M16-80-G	2	d_2
	3	l_1
	4	Type

Stainless Steel-Levelling feet

Foot, threaded bush / stud Stainless Steel

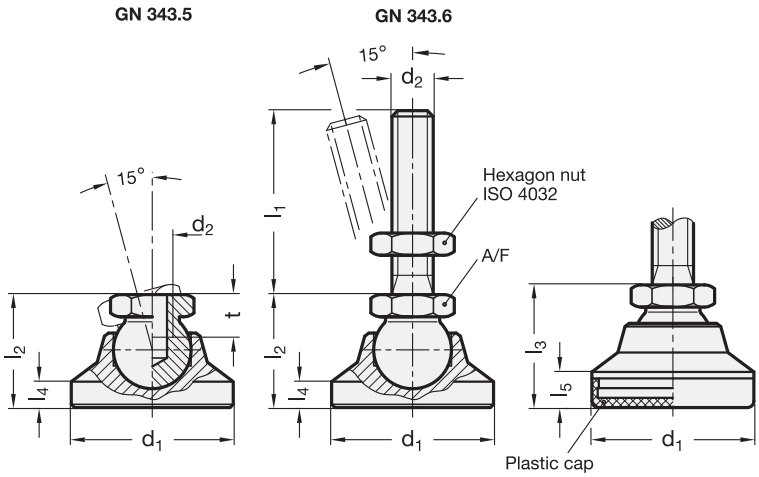

4 Type

- **OS** without plastic cap
- **KS** with plastic cap, gliding
- **KR** with plastic cap, non-gliding
- **KSE** with plastic cap, gliding, electrically conductive (antistatic)
- **KRE** with plastic cap, non-gliding, electrically conductive (antistatic)

1 d_1	2 d_2	3 l_1			l_2	l_3	l_4	l_5	A/F	t min.	Static load in kN for GN 343.6 (see Information)
25	M 6*	-	-	-	19	20,5	4	5,5	12	9	7
25	M 8	40	50	63	19	20,5	4	5,5	12	9	7
32	M 8	40	50	63	23	24,5	5	6,5	12	9	7
32	M 10	50	63	80	23	24,5	5	6,5	15	10,5	11
40	M 10	50	63	80	26	27,5	6	7,5	15	10,5	11
40	M 12	63	80	100	26	27,5	6	7,5	17	11,5	16
50	M 10	50	63	80	28	29,5	7	8,5	15	10,5	11
50	M 12	63	80	100	28	29,5	7	8,5	17	11,5	16
60	M 12	63	80	100	36	37,5	8,5	10	17	11,5	16
60	M 16	80	100	125	36	37,5	8,5	10	24	16	30
60	M 20**	98	138	158	36	37,5	8,5	10	24	-	45
60	M 24**	98	138	158	36	37,5	8,5	10	24	-	45

* only GN 343.5 (female thread) ** only GN 343.6 (threaded stud)

Specification

- Stainless Steel AISI 303
- Type **KS / KSE**
  Plastic cap Polyacetal (POM)
  - KS: white (natural colour) RAL 9001
  - KSE: black, electrically conductive
    Surface resistivity: < 10^6 Ω
    Volume resistivity: < 10^7 Ω
    DIN EN 61340-5-1 / 61340-2-3
- Type **KR / KRE**
  Plastic cap Elastomer (TPE), 73 shore
  - KR: black
  - KRE: black, electrically conductive
    Surface resistivity: < 10^6 Ω
    Volume resistivity: < 10^7 Ω
    DIN EN 61340-5-1 / 61340-2-3
- RoHS compliant

Information

The static load of the levelling feet GN 343.5 / GN 343.6 is limited by the load capacity of the Stainless Steel ball joint (German Material No. 1.4305). The static load values in the above table refer to a net vertical load in relation to the levelling foot. Under normal operating conditions side loading or angular loading is not uncommon and the load capacity would be considerably reduced which must be taken into consideration. Levelling feet GN 343.5 / GN 343.6 can not be disassembled.

Levelling foot with female thread

1 2 4

GN 343.5-25-M8-KS

1	d_1
2	d_2
4	Type

Levelling foot with threaded stud

1 2 3 4

GN 343.6-40-M12-100-OS

1	d_1
2	d_2
3	l_1
4	Type

Levelling feet

Foot plastic, threaded bush / stud Stainless Steel

GN 343.7

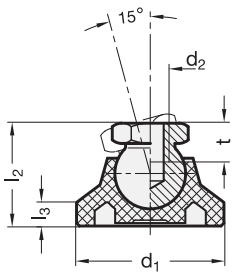

GN 343.8

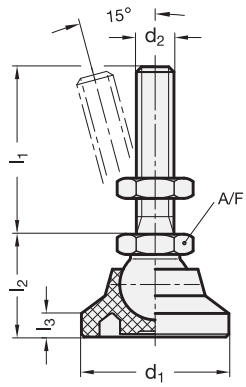

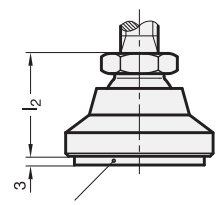

Rubber underlay (anti-slip type)

Inox Stainless Steel

4 Type

A without rubber underlay
G with rubber underlay

1 d_1	2 d_2	3 l_1			l_2	l_3	A/F	t min.	Static load in kN (see information)
25	M 6*	-	-	-	18,5	4	12	9	5
25	M 8	40	50	63	18,5	4	12	9	5
32	M 8	40	50	63	22,5	5	12	9	7
32	M 10	50	63	80	22,5	5	15	10,5	7
40	M 10	50	63	80	25,5	6	15	10,5	10
40	M 12	63	80	100	25,5	6	17	11,5	10
50	M 10	50	63	80	27,5	7	15	10,5	10
50	M 12	63	80	100	27,5	7	17	11,5	10
60	M 12	63	80	100	35,5	8,5	17	11,5	14
60	M 16	80	100	125	35,5	8,5	24	16	14
60	M 20**	98	138	158	35,5	8,5	24	-	14
60	M 24**	98	138	158	35,5	8,5	24	-	14

* only GN 343.7 (Female thread) ** only GN 343.8 (Threaded stud)

Specification

- Foot: Plastic (Polyamide PA)
  - glass fibre reinforced
  - black, matt
  - temperature resistant up to 100 °C
- Threaded bush / stud: Stainless Steel AISI 303
- Hexagon nut ISO 4032 Stainless Steel AISI 304
- Rubber underlay (NBR) 70 shore hardness, black
- RoHS compliant

On request

- ESD version (conductive plastic cap to avoid electrostatic charging)

Information

Levelling feet GN 343.7 / GN 343.8 are capable of withstanding high static loads through the use of a high density plastic material coupled with a design which distributes the load over a larger area. Exceeding the static values specified in the above table could lead to failure of the plastic component. The above values have been arrived at by a series of load tests whereby a defined number of levelling feet were subjected to a vertical load over a defined period. Levelling feet GN 343.7 / GN 343.8 are supplied assembled, but are removable.

Levelling foot with female thread		
GN 343.7-32-M10-G (1 2 4)	1	d_1
	2	d_2
	4	Type

Levelling foot with threaded stud		
GN 343.8-60-M16-125-G (1 2 3 4)	1	d_1
	2	d_2
	3	l_1
	4	Type

Ball jointed levelling feet

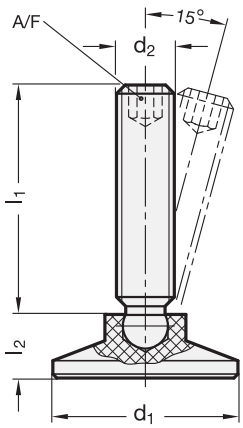

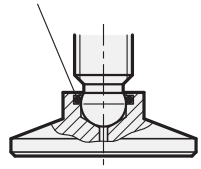

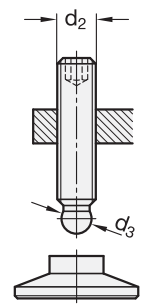

Inox
Stainless
Steel

1		2	3								
d_1 ST / NI	NV	d_2	l_1				d_3 ≈	l_2	A/F	Static load in kN (see information) ST / NI	NV
15	-	M 6	26	36	46	-	4,5	7,6	3	3,5	-
15	-	M 8	20	35	45	58	6,1	7,6	4	3,5	-
18	-	M 6	26	36	46	-	4,5	9,2	3	3,5	-
18	-	M 8	20	35	45	58	6,1	9,2	4	3,5	-
18	-	M 10	34	44	57	74	7,8	9,2	5	3,5	-
21	21	M 6	26	36	46	-	4,5	10	3	3,5	3,5
21	21	M 8	20	35	45	58	6,1	10	4	3,5	7
21	21	M 10	34	44	57	74	7,8	10	5	3,5	11
21	21	M 12	34	57	74	94	9,4	10	6	3,5	16
25	25	M 6	26	36	46	-	4,5	10,5	3	3,5	3,5
25	25	M 8	20	35	45	58	6,1	10,5	4	3,5	7
25	25	M 10	34	44	57	74	7,8	10,5	5	3,5	11
25	25	M 12	34	57	74	94	9,4	10,5	6	3,5	16
32	32	M 6	26	36	46	-	4,5	11	3	3,5	3,5
32	32	M 8	20	35	45	58	6,1	11	4	3,5	7
32	32	M 10	34	44	57	74	7,8	11	5	3,5	11
32	32	M 12	34	57	74	94	9,4	11	6	3,5	16
40	40	M 8	20	35	45	58	6,1	13	4	3,5	7
40	40	M 10	34	44	57	74	7,8	13	5	3,5	11
40	40	M 12	34	57	74	94	9,4	13	6	3,5	16

Specification

4

- Thrust pad **ST**
  Plastic (Polyacetal POM)
  - temperature resistant up to 80 °C
  - black, matt

  Threaded stud
  Steel, blackened
  - Tensile strength class 5.8 (500 N/mm²)
- Thrust pad **NI**
  Plastic (Polyacetal POM)
  - temperature resistant up to 80 °C
  - black, matt

  Threaded stud
  Stainless Steel AISI 303
- Thrust pad **NV**
  Stainless Steel AISI 303
  - O-ring rubber FPM (Viton®)
  - temperature resistant up to 200 °C

  Threaded stud
  Stainless Steel AISI 303
- *Stainless Steel characteristics → Page 1144*
- *Plastic characteristics → Page 1141*
- RoHS compliant

Information

Ball jointed levelling feet GN 638 feature a smaller size ball diameter than the trunk of the threaded stud. As a result the studs can be screwed into position from the ball side. The ball end can easily be hammered in and also dismantled.

Details regarding the static load capacity have been established by a series of tests but are indicative only. For these tests the loads have been placed vertically and centrally over the stud. At the measured load of 3,5 kN there was no remaining deformation visible on the thrust pad nor was there any breakage.

see also...
- *Thrust pads GN 631 / GN 631.5 (Part of GN 638) → Page 597*
- *Grub screws GN 632.1 / GN 632.5 (Part of GN 638) → Page 596*

Levelling foot with plastic thrust pad

1 2 3 4
GN 638-18-M8-58-ST

1	d_1
2	d_2
3	l_1
4	Material

Stainless Steel-Levelling foot

1 2 3 4
GN 638-21-M8-35-NV

1	d_1
2	d_2
3	l_1
4	Material

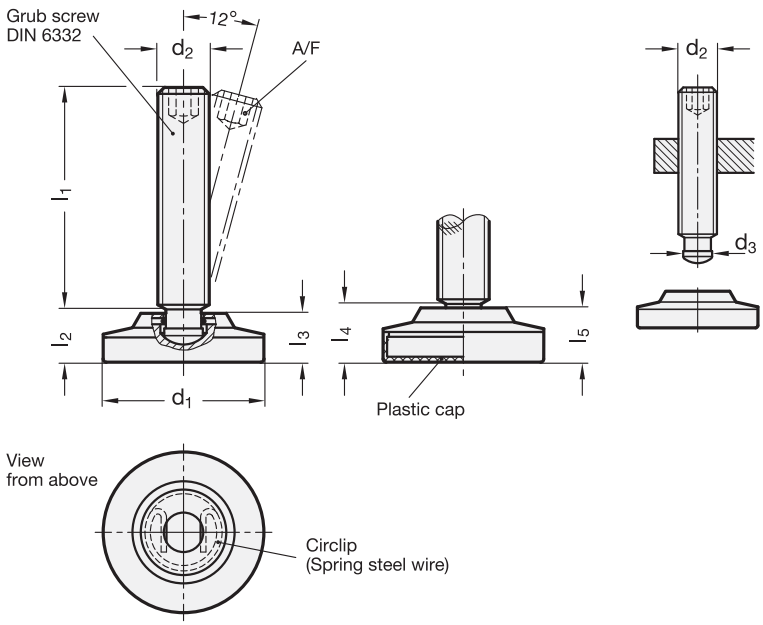

4 Type

OS without plastic cap
KS with plastic cap, gliding
KR with plastic cap, non-gliding

1 d_1	2 d_2	3 l_1 ≈					d_3	l_2	l_3	l_4	l_5	A/F	Static load in kN
50	M 12	41	51	61	71	91	8	12,5	11,5	14	13	6	13
50	M 16	59	69	89	114	-	12	14,5	13,5	16	15	8	30
60	M 16	59	69	89	114	-	12	14,5	13,5	16	15	8	30
60	M 20	78	88	113	138	-	15,5	16,5	15,5	18	17	10	50

Specification

- Steel
  - Tensile strength class 5.8 (500 N/mm²)
  - zinc plated, blue passivated
- Plastic caps:
  - Type KS
    Technopolymer (Polyacetal POM)
    white (natural colour) RAL 9001
  - Type KR
    Elastomer (TPE)
    73 Shore, black
- *Plastic characteristics* → *Page 1141*
- *Elastomer characteristics* → *Page 1140*
- RoHS compliant

Information

Levelling feet GN 6311.4 are normally used when a thread is present at the machine side to adjust the height.

The pin diameter d_3 is smaller than the core diameter of the thread, with the effect that the screw can be turned in at the pin. The pressure pin is easily inserted into the plate, with the retaining ring ensuring that the assembly is secure in axial direction.

The static load of the levelling feet GN 6311.4 is limited by the laod capacity of the grub screw (Tensile strength class 5.8). The static load values (only valid for Type OS/KS) in the above table refer to a net vertical load in relation to the ball socket. Under normal operating conditions side loading or angular loading is not uncommon and the load capacity would be considerable reduced which must be taken into consideration.

see also...
- *Ball jointed levelling feet GN 638* → *Page 816*

On request

- Foot GN 6311.3
  (without grub screw DIN 6332)

How to order

GN 6311.4-60-M20-88-OS (1 2 3 4)

1	d_1
2	d_2
3	l_1
4	Type

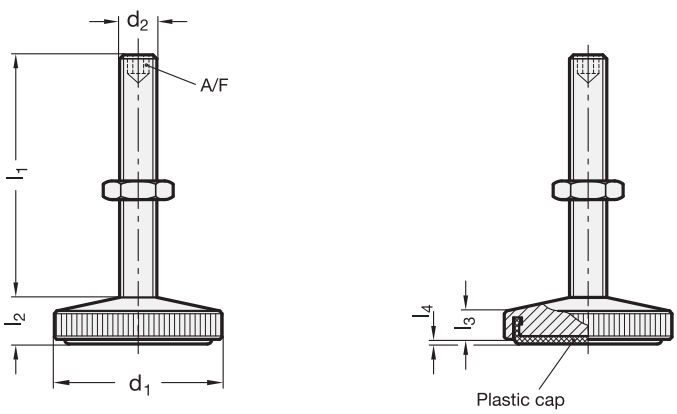

4 Type

KS with plastic cap, gliding

KR with plastic cap, non-gliding

1 d_1	2 d_2	3 l_1		l_2 ≈	l_3 ≈	l_4 Type KS	l_4 Type KR	A/F
29	M 6	30	45	8	5	1	0,4	3
29	M 8	35	55	8	5	1	0,4	4
36	M 8	40	65	9	6	1	0,5	4
36	M 10	45	70	9	6	1	0,5	5

Specification

5

- Steel **ST**
  - Tensile strength class 5.8 (500 N/mm²)
  - zinc plated, blue passivated
- Plastic caps:
  - Type KS
    Technopolymer (Polyacetal POM)
    white (natural colour) RAL 9001
  - Type KR
    Elastomer (TPE)
    73 shore, black
- Hexagon nut ISO 4035
  Steel zinc plated, blue passivated
- *Elastomer characteristics → Page 1140*
- *Plastic characteristics → Page 1141*
- RoHS compliant

On request

- Stainless Steel-Specification (NI)

Information

Levelling feet GN 339 are used for applications in cases where no jointed link is required between foot and adjusting screw.

For this reason they offer the advantage of reduced height.

The gliding and/or the non-gliding protective cap is safely fixed in the foot.

see also...

- *Discs with cover cap (as simple feet) GN 338 → Page 544*

How to order

1 2 3 4 5

GN 339-36-M10-45-KR-ST

1	d_1
2	d_2
3	l_1
4	Type
5	Steel

GN 342.1

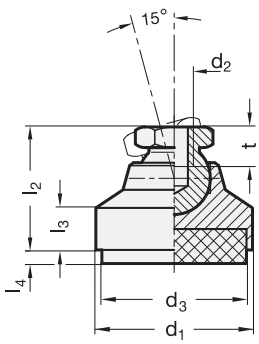

GN 342.2

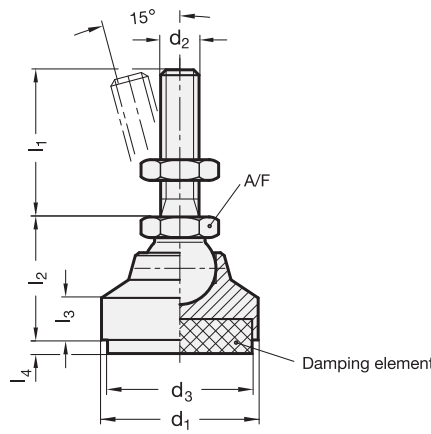

4 Type

SV with damping element

1 d_1	2 d_2	3 l_1		d_3	l_2	l_3	l_4 compression in N/mm² 0	0,4	0,6	A/F	t	Area damping element in mm²	Load in N at compression 0,4 N/mm² (see information)
32	M 10	50	80	30	29	11	5,5	3,8	2,7	15	10,5	707	280
40	M 12	63	100	38	30	9,5	6	4,3	3,3	17	11,5	1134	450
50	M 12	63	100	48	30,5	9	6,5	4,9	3,9	17	11,5	1809	720
60	M 16	80	125	58	37,5	10	7	5,5	4,4	24	16	2641	1050

Specification

- Steel
  - Tensile strength class 5.8 (500 N/mm²)
  - zinc plated, blue passivated
- Damping element
  Elastomer (PUR)
  - Sylomer SR 450-12
  - anti-slip, glued
  - grey
  - oil resistant
  - Operating range from -30 °C up to +70 °C
- Hexagon nut ISO 4032
  Steel zinc plated, blue passivated
- *Elastomer characteristics → page 1140*
- RoHS compliant

Information

The specified load in the above table of the levelling feet GN 342.1 / GN 342.2 is a recommendation up to which the damping element can be **permanently** subjected.

This static load equals a thrust on the area of 0,4 N/mm², at which the damping material reaches its optimum dynamic damping ability. This also takes into account an additional load up to 0,6 N/mm² in the event of a dynamic load.

Levelling feet GN 342.1 / GN 342.2 can not be disassembled.

Levelling foot with female thread

1 2 4

GN 342.1-32-M10-SV

1	d_1
2	d_2
4	Type

Levelling foot with threaded stud

1 2 3 4

GN 342.2-50-M12-63-SV

1	d_1
2	d_2
3	l_1
4	Type

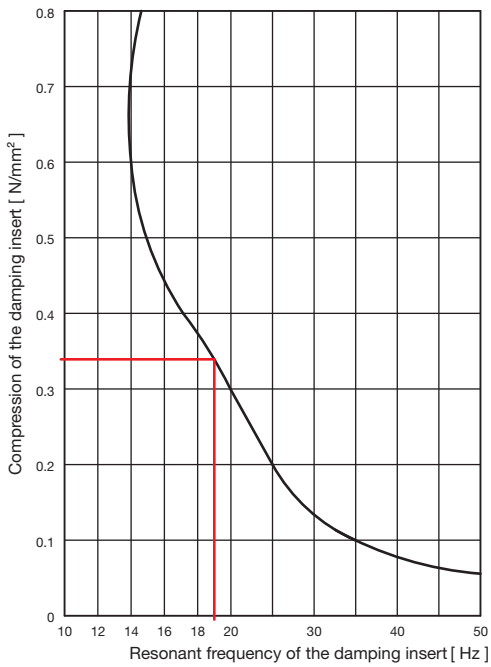

Vibration absorption - Performance graph

When using levelling feet GN 342.1 / GN 342.2 the following differentiation in vibration absorption is made:

Active vibrations:
Vibrations transmitted to surroundings or associated equipment from working machinery for example.

Passive vibrations:
Vibrations transmitted to equipment or parts from vibrating surroundings or bases.

The efficiency of vibration absorption is dependent upon the interference frequency of the vibration to be absorbed as well as on the resonant frequency of the damping element itself.

A vibration absorbing effect is only achieved when the interference frequency is greater than √2-times the resonant frequency of the damping element. The greater the difference [Δ] between the two, the better the damping effect.

The resonant frequency of the damping pad is dependant upon type (composition) of the material cross section and the static load.

The graphs on the left show all the required data of the standard material (SR 450-12) of the damping element. Damping elements with other absorption properties are available on request.

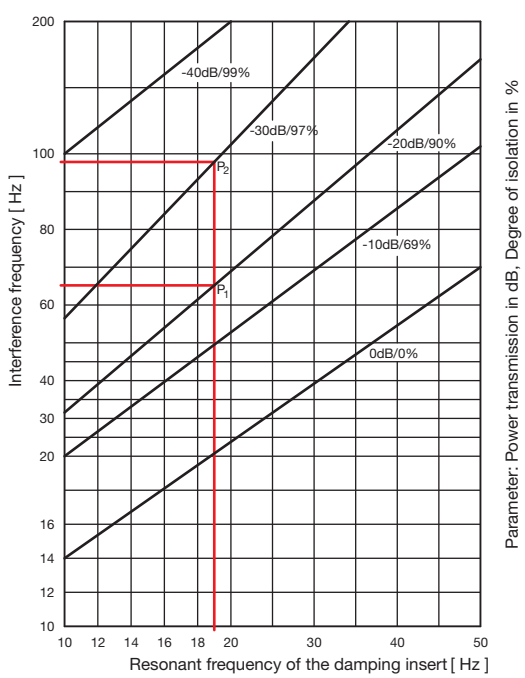

Example

Assume a load per levelling foot: 400 N

Compression levelling foot d1 = 32

$$\frac{400\ \text{N}}{707\ \text{mm}^2} = 0{,}57\ \text{N/mm}^2$$

Compression levelling foot d1 = 40

$$\frac{400\ \text{N}}{1134\ \text{mm}^2} = 0{,}34\ \text{N/mm}^2$$

Therefore levelling feet with d1=40, that exert a pressure of 0,4 N/mm² should be preferred.

The above graph shows:
Resonant frequency with compression 0,34 N/mm²:17,5 Hz

The lower graph shows:
Degree of isolation at 66 Hz interference frequency (P1): 92 %
Degree of isolation at 98 Hz interference frequency (P2): 97 %

At approximately 200 Hz interference frequency the degree of isolation is 100%.

Levelling feet

with female thread

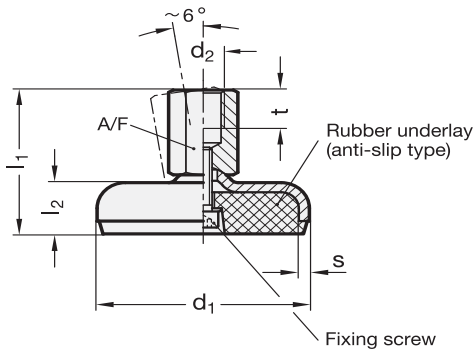

Rost frei — Inox Stainless Steel

Inch — Inch sizes available

3 Type

AG with black rubber underlay
AW with white rubber underlay

1 d_1	2 d_2	l_1	l_2	A/F	s	t min.	Static load in kN (see information) Type AG GN 340	Type AG GN 340.5	Type AW GN 340	Type AW GN 340.5
50	M 8	37	14,5	14	3	8	8	8	8	8
50	M 10	40	14,5	14	3	10	13	13	13	13
50	M 12	43,5	14,5	17	3	12	16	20	13	20
50	M 16	49	14,5	22	3	16	16	28	13	25
60	M 8	38,5	16	14	3	8	8	8	8	8
60	M 10	41,5	16	14	3	10	13	13	13	13
60	M 12	45	16	17	3	12	16	20	13	20
60	M 16	50,5	16	22	3	16	16	28	13	25
80	M 8	40,5	18	14	3	8	8	8	8	8
80	M 10	43,5	18	14	3	10	12	13	11	13
80	M 12	47	18	17	3	12	12	15	11	15
80	M 16	52,5	18	22	3	16	12	19	11	15
80	M 20	60	18	27	3	20	12	19	11	15
100	M 8	42,5	20	14	3	8	8	8	8	8
100	M 10	45,5	20	14	3	10	11	13	10	13
100	M 12	49	20	17	3	12	11	17	10	14
100	M 16	54,5	20	22	3	16	11	17	10	14
100	M 20	62	20	27	3	20	11	17	10	14
120	M 20	65,5	22	27	4	20	20	25	16	22

Specification

- **GN 340**
  Steel zinc plated, blue passivated
  - Foot, sheet metal
  - Threaded bush
    Tensile strength class 5.8 (500 N/mm^2)
- **GN 340.5**
  Stainless Steel
  - Foot AISI 304
    matt shot-blasted
  - Threaded bush AISI 303

This information applies to both standards:

- Rubber underlay
  - black (Type AG)
    Perbunan® (NBR)
    80±5 Shore
  - white (Type AW)
    Santoprene® (TPE)
    80±5 Shore
- Fixing screw
  Stainless Steel A2, loctited
- *Elastomer characteristics* → *Page 1140*
- *Stainless Steel characteristics* → *Page 1144*
- RoHS compliant

Information

A particular characteristic of the levelling feet GN 340 / GN 340.5 is the solid rubber underlay being firmly embed in the sheet metal foot and additionally fixed by a loctited screw.

The static load is limited by any deformation of the sheet metal foot.

see also...
- *Levelling feet GN 340 / 340.5 (with threaded stud)* → *Page 824*

Steel-Levelling foot 1 2 3 GN 340-60-M12-AG		
	1	d_1
	2	d_2
	3	Type

Stainless Steel-Levelling foot 1 2 3 GN 340.5-80-M16-AW		
	1	d_1
	2	d_2
	3	Type

Levelling feet

with threaded stud

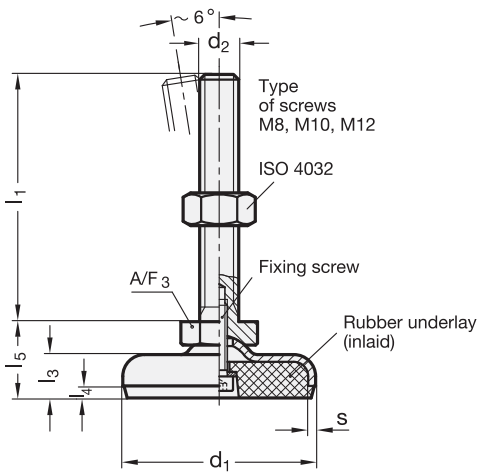

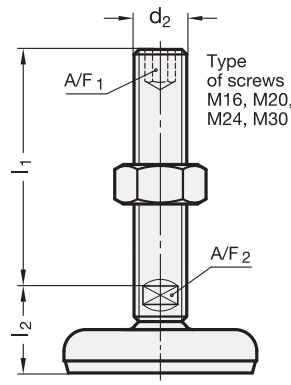

Inox Stainless Steel

Inch sizes available

4 Type

AG with black rubber underlay, without nut

BG with black rubber underlay, with nut

AW with white rubber underlay, without nut

BW with white rubber underlay, with nut

1 d_1	2 d_2	3 l_1					l_2	l_3 ≈	l_4	l_5	s	A/F_1	A/F_2	A/F_3	Static load in kN (see information) Type AG / BG GN 340	Type AG / BG GN 340.5	Type AW / BW GN 340	Type AW / BW GN 340.5
50	M 8	40	50	63	-	-	-	14,5	3,5	23	3	-	-	17	8	8	8	8
50	M 10	50	60	80	100	-	-	14,5	3,5	23	3	-	-	17	10	14	10	14
50	M 12	60	80	100	125	-	-	14,5	3,5	23	3	-	-	17	12	20	12	20
50	M 16	75	100	125	150	200	29	14,5	3,5	-	3	8	12	-	16	28	13	28
60	M 8	40	50	63	-	-	-	16	4	24	3	-	-	17	8	8	8	8
60	M 10	50	60	80	100	-	-	16	4	24	3	-	-	17	10	14	10	14
60	M 12	60	80	100	125	-	-	16	4	24	3	-	-	17	12	20	12	20
60	M 16	75	100	125	150	200	30	16	4	-	3	8	12	-	16	28	13	25
80	M 8	40	50	63	-	-	-	18	5	26	3	-	-	17	8	8	8	8
80	M 10	50	60	80	100	-	-	18	5	26	3	-	-	17	10	14	10	14
80	M 12	60	80	100	125	-	-	18	5	26	3	-	-	17	12	19	12	15
80	M 16	75	100	125	150	200	32	18	5	-	3	8	12	-	12	19	11	15
80	M 20	75	100	125	150	200	33	18	5	-	3	10	15	-	12	19	11	15
80	M 24	100	125	150	200	-	36	18	5	-	3	12	19	-	12	19	11	15
100	M 8	40	50	63	-	-	-	20	6	28	3	-	-	17	8	8	8	8
100	M 10	50	60	80	100	-	-	20	6	28	3	-	-	17	10	14	10	14
100	M 12	60	80	100	125	-	-	20	6	28	3	-	-	17	11	17	10	14
100	M 16	75	100	125	150	200	34	20	6	-	3	8	12	-	11	17	10	14
100	M 20	75	100	125	150	200	35	20	6	-	3	10	15	-	11	17	10	14
100	M 24	100	125	150	200	-	38	20	6	-	3	12	19	-	11	17	10	14
120	M 20	100	125	150	200	-	39	22	6	-	4	10	15	-	20	25	16	22
120	M 24	100	125	150	200	-	42	22	6	-	4	12	19	-	20	25	16	22
120	M 30	100	125	150	200	-	46	22	6	-	4	12	24	-	20	25	16	22

Specification

- **GN 340**
  Steel zinc plated, blue passivated
  - Foot, sheet metal
  - Screw
    Tensile strength class 5.8 (500/mm²)
  - Hexagon nut ISO 4032
- **GN 340.5**
  Stainless Steel
  - Foot AISI 304
    matt shot-blasted
  - Screw AISI 303
  - Hexagon nut ISO 4032 AISI 304
- Rubber underlay
  - black (Type AG / BG)
    Perbunan® (NBR)
    80±5 Shore
  - white (Type AW / BW)
    Santoprene® (TPE)
    80±5 Shore
- Fixing screw
  Stainless Steel A2, loctited
- *Elastomer characteristics → page 1140*
- *Stainless Steel characteristics → page 1144*
- RoHS compliant

Information

A particular characteristic of the levelling feet GN 340 / GN 340.5 is the solid rubber underlay being firmly embed in the sheet metal foot and additionally fixed by a loctited screw.

The threaded stud can be either adjusted at the hexagon of the upper end or at the spanner flats at the lower end. The static load is limited by any deformation of the sheet metal foot.

see also...
- *Levelling feet GN 340 / 340.5 (with internal thread) → Page 822*
- *Levelling feet GN 340.1 (with fixing lug) → Page 826*
- *Stainless Steel-Levelling feet GN 341.1 → Page 829*

Steel-Levelling foot		
GN 340-50-M16-75-AG (1 2 3 4)	1	d_1
	2	d_2
	3	l_1
	4	Type

Stainless Steel-Levelling foot		
GN 340.5-100-M20-125-BG (1 2 3 4)	1	d_1
	2	d_2
	3	l_1
	4	Type

Levelling feet

with fixing lug

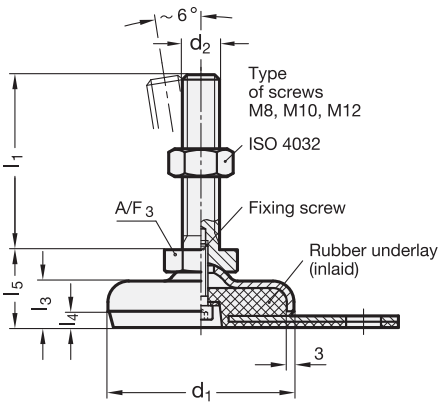

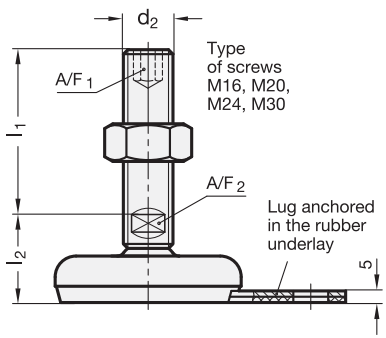

Inox
Stainless
Steel

4 Type

AG without nut
BG with nut

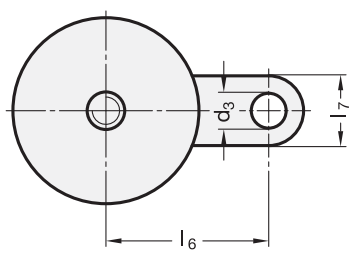

1 d_1	2 d_2	3 l_1					d_3	l_2	l_3 ≈	l_4	l_5	l_6	l_7	A/F_1	A/F_2	A/F_3	Static load in kN (see information) GN 340.1	GN 340.6
50	M 8	40	50	63	-	-	13	-	18	7	26	45	25	-	-	17	8	8
50	M 10	50	60	80	100	-	13	-	18	7	26	45	25	-	-	17	10	14
50	M 12	60	80	100	125	-	13	-	18	7	26	45	25	-	-	17	12	20
50	M 16	75	100	125	150	200	13	32	18	7	-	45	25	8	12	-	16	28
60	M 8	40	50	63	-	-	13	-	19	7	27	50	25	-	-	17	8	8
60	M 10	50	60	80	100	-	13	-	19	7	27	50	25	-	-	17	10	14
60	M 12	60	80	100	125	-	13	-	19	7	27	50	25	-	-	17	12	20
60	M 16	75	100	125	150	200	13	33	19	7	-	50	25	8	12	-	16	28
80	M 8	40	50	63	-	-	15	-	20	7	28	70	30	-	-	17	8	8
80	M 10	50	60	80	100	-	15	-	20	7	28	70	30	-	-	17	10	14
80	M 12	60	80	100	125	-	15	-	20	7	28	70	30	-	-	17	12	20
80	M 16	75	100	125	150	200	15	34	20	7	-	70	30	8	12	-	12	19
80	M 20	75	100	125	150	200	15	34	20	7	-	70	30	10	15	-	12	19
80	M 24	100	125	150	200	-	15	34	20	7	-	70	30	12	19	-	12	19
100	M 8	40	50	63	-	-	15	-	21	7	29	80	30	-	-	17	8	8
100	M 10	50	60	80	100	-	15	-	21	7	29	80	30	-	-	17	10	14
100	M 12	60	80	100	125	-	15	-	21	7	29	80	30	-	-	17	11	17
100	M 16	75	100	125	150	200	15	35	21	7	-	80	30	8	12	-	11	17
100	M 20	75	100	125	150	200	15	35	21	7	-	80	30	10	15	-	11	17
100	M 24	100	125	150	200	-	15	35	21	7	-	80	30	12	19	-	11	17

Specification

- **GN 340.1**
  Steel zinc plated, blue passivated
  - Foot / lug sheet metal ST 12.03
  - Threaded stud
    Tensile strength class 5.8 (500 N/mm^2)
  - Hexagon nut ISO 4032
- **GN 340.6**
  Stainless Steel
  - Foot / lug AISI 304
    matt shot-blasted
  - Threaded stud AISI 303
  - Hexagon nut ISO 4032 AISI 304
- Rubber underlay (NBR)
  - 80 ... 85 shore hardness
  - inlaid, black
- Fixing screw
  Stainless Steel A2, loctited
- *Stainless Steel characteristics → page 1144*
- *Elastomer characteristics → page 1140*
- RoHS compliant

Information

A particular characteristic of the levelling feet GN 340.1 / 340.6 is the solid rubber underlay being firmly embed in the sheet metal foot and additionally fixed by a loctited screw.

The threaded stud can be either adjusted at the hexagon of the upper end or at the spanner flats at the lower end. The fixing lug anchored in the rubber rest allows the levelling foot to be bolted immovably to the floor. The static load is limited by any deformation of the sheet metal foot (sheet metal thickness 3 mm).

The values given in the table rest on a series of tests in which a load has been applied perpendicularly to the cup. After the load is released, minor deformations of the sheet metal cup differing from the values specified in the table may occur.

Levelling foot		
GN 340.1-80-M24-100-BG (1 2 3 4)	1	d_1
	2	d_2
	3	l_1
	4	Type

Stainless Steel-Levelling foot		
GN 340.6-80-M24-100-BG (1 2 3 4)	1	d_1
	2	d_2
	3	l_1
	4	Type

GN 341 Stainless Steel-Levelling feet

vulcanized rubber underlay, black or white

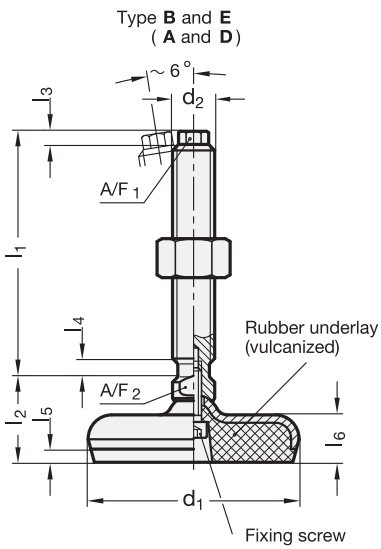

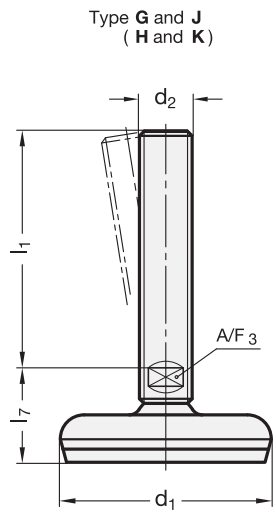

Inox Stainless Steel

4 Type

Rubber underlay **black**

- **A** Screw with A/F_1 /A/F_2, without nut
- **B** Screw with A/F_1 /A/F_2, with nut
- **G** Screw with A/F_3, without nut
- **H** Screw with A/F_3, with nut

Rubber underlay **white**

- **D** Screw with A/F_1 /A/F_2, without nut
- **E** Screw with A/F_1 /A/F_2, with nut
- **J** Screw with A/F_3, without nut
- **K** Screw with A/F_3, with nut

1 d_1	2 d_2	3 l_1				l_2	l_3	l_4 ≈	l_5	l_6 +0,5	l_7 ≈	A/F_1 Hexagon head	A/F_2 Spanner flat	A/F_3 Spanner flat	Static load in kN (see information)
60	M 16	75	100	125	150	29	5	8	4	16	32	10	12	12	27
80	M 16	75	100	125	150	32	5	8	5	18	35	10	12	12	24
80	M 20	100	125	150	200	32	6,5	8	5	18	36	13	16	15	24
80	M 24	100	150	200	-	34	8,5	10,5	5	18	38	17	20	19	24
100	M 16	75	100	125	150	29	5	8	6	20	38	10	12	12	21
100	M 20	100	125	150	200	35	6,5	8	6	20	39	13	16	15	21
100	M 24	100	150	200	-	37	8,5	10,5	6	20	41	17	20	19	21

Specification

5

- Foot
  Stainless Steel AISI 304
  - matt shot-blasted **MT**
  - polished **PL**
- Screw
  Stainless Steel AISI 303
- Hexagon nut ISO 4032
  Stainless Steel AISI 304
- Rubber underlay (NBR)
  - 85 ... 90 Shore
  - vulcanized
  - black (Type A, B, G, H)
  - white (Type
- Fixing screw
  Stainless Steel A2, loctited
- *Stainless Steel characteristics → Page 1144*
- *Elastomer characteristics → Page 1140*
- RoHS compliant

Information

A feature of the Stainless Steel-Levelling feet GN 341 is the **vulcanized** rubber underlay in the Stainless Steel-Foot.

For Types A and B, the screw can be adjusted both with the hexagon at the top end (A/F1) and at the spanner flats at the lower end of the screw (A/F2). For Types G and H, the spanner flats at the lower end of the screw (A/F3) serve to adjust the screw.

The load figures specified in the table above are based on a series of tests whereby a vertical load in relation to the horizontal plane of the foot is applied. If the above figures are exceeded, a permanent deformation of the Stainless Steel-Foot (3 mm thickness) can occur.

The details relating to the load bearing capacity are non-binding recommended values and rule out any liability. They constitute no general warranty of quality and condition. The user must determine from case to case whether a product is suitable for the intended use.

How to order

1 2 3 4 5
GN 341-80-M16-150-A-MT

1	d_1
2	d_2
3	l_1
4	Type
5	Finish

Stainless Steel-Levelling feet

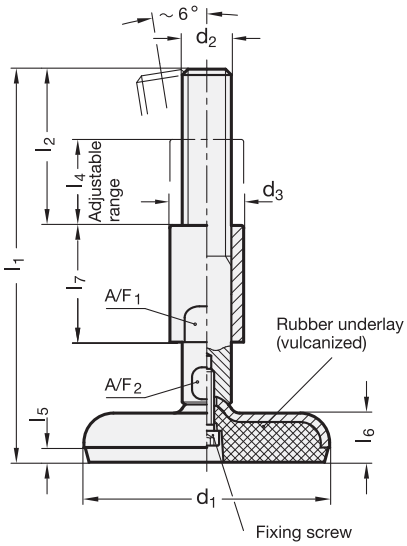

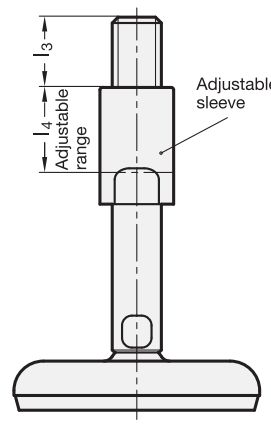

Inox Stainless Steel

1	2	3													
d_1	d_2	l_1				d_3	l_2	l_3	l_4 Adjustable range	l_5	l_6	l_7	A/F_1	A/F_2	Static load in kN (see Information)
60	M 16	125	150	175	200	24	45	13	32	4	16	45	20	12	27
80	M 16	128	153	178	203	24	45	13	32	5	18	45	20	12	24
80	M 20	152	177	202	252	30	56	16	40	5	18	56	24	16	24
80	M 24	176	226	276	-	35	67	19	48	5	18	67	30	20	24
100	M 16	130	155	180	205	24	45	13	32	6	20	45	20	12	21
100	M 20	155	180	205	255	30	56	16	40	6	20	56	24	16	21
100	M 24	179	229	279	-	35	67	19	48	6	20	67	30	20	21

Specification 4

- **GN 341.1**
  Rubber underlay (NBR), black vulcanized, 85 ... 90 Shore
- **GN 341.2**
  Rubber underlay (NBR), white vulcanized, 85 ... 90 Shore

This information applies to both standards:

- Foot
  Stainless Steel AISI 304
  - matt shot-blasted **MT**
  - polished **PL**
- Screw / adjustable sleeve
  Stainless Steel AISI 303
- Hexagon nut ISO 4032
  Stainless Steel AISI 304
- Fixing screw
  Stainless Steel A2, loctited
- *Stainless Steel characteristics → Page 1144*
- *Elastomer characteristics → Page 1140*
- RoHS compliant

Information

Stainless Steel-Levelling feet for application in hygiene environment GN 341.1 / GN 341.2 have been designed to meet requirements in the food industry. With the convex shaped bolt head seat on the Stainless Steel foot, the formation of deposits is greatly reduced and the cleaning is simplified.

The rubber underlay is **vulcanized** into the Stainless Steel foot. The adjustable sleeve is shrouding the thread over its adjustable length and sharp edges and corners have been to a large extent avoided.

Stainless Steel-Levelling feet GN 341.1 / GN 341.2 obtained the EQUIPMENT ACCEPTANCE CERTIFICATE of USDA (US-Department of Agriculture).

The load figures specified in the table above are based on a series of tests whereby a vertical load in relation to the horizontal plane of the foot is applied. If the above figures are exceeded, a permanent deformation of the Stainless Steel foot can occur.

How to order

1 2 3 4
GN 341.2-60-M16-125-PL

1	d_1
2	d_2
3	l_1
4	Finish

Levelling feet

with female thraed

Type **OS**

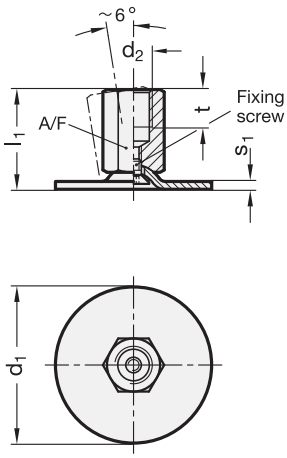

Type **KR**

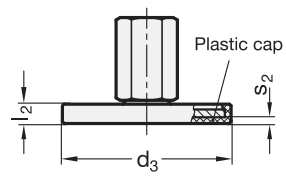

Type **GV**

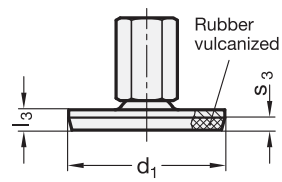

Inox Stainless Steel

Inch sizes available

3 Type

OS without plastic cap
KR with plastic cap, non-gliding
GV with rubber, vulcanized

1 d_1	2 d_2	d_3	l_1	l_2	l_3	s_1	s_2	s_3	A/F	t min.	Static load in kN	
											GN 440	GN 440.5
40	M 8	43	25	5	5,5	2	1,5	3,5	14	8	7	8
40	M 10	43	28	5	5,5	2	1,5	3,5	14	10	7	12
40	M 12	43	31	5	5,5	2	1,5	3,5	17	12	7	12
40	M 16	43	37	5	5,5	2	1,5	3,5	22	16	7	12
50	M 8	54	25	6	6,5	2,5	2	4	14	8	8	8
50	M 10	54	28	6	6,5	2,5	2	4	14	10	8	14
50	M 12	54	32	6	6,5	2,5	2	4	17	12	8	14
50	M 16	54	37	6	6,5	2,5	2	4	22	16	8	14
60	M 8	64	25	6	7	2,5	2	4,5	14	8	8	8
60	M 10	64	28	6	7	2,5	2	4,5	14	10	10	14
60	M 12	64	32	6	7	2,5	2	4,5	17	12	10	16
60	M 16	64	37	6	7	2,5	2	4,5	22	16	10	16
80	M 8	84	26	7	8	3	2	5	14	8	8	8
80	M 10	84	29	7	8	3	2	5	14	10	10	14
80	M 12	84	32	7	8	3	2	5	17	12	12	20
80	M 16	84	38	7	8	3	2	5	22	16	12	20
80	M 20	84	45	7	8	3	2	5	27	20	16	20

Specification

- **GN 440**
  Steel
  - zinc plated, blue passivated
  - Foot for Type GV
    Stainless Steel AISI 304
  - Threaded bush
    Tensile strength class 5.8 (500 N/mm²)
- **GN 440.5**
  Stainless Steel
  - Foot AISI 304
  - Threaded bush AISI 303

This information applies to both standards:

- Plastic cap
  Elastomer (TPE)
  73 Shore, black
- Rubber underlay (NBR)
  70±5 Shore, black
  vulcanized
- *Stainless Steel characteristics* → *Page 1144*
- *Elastomer characteristics* → *Page 1140*
- RoHS compliant

Information

Levelling feet GN 440 / GN 440.5 are an easy and very reasonably priced foot design variant.

The static load bearing capacity given in the table rests on a test series in which the load has been applied perpendicular to the plate. For the values given in the table, the strain relief may result in minor deformations of the foot. The details relating to the load bearing capacity are non-binding recommended values and rule out any liability.

They constitute no general warranty of quality and condition. The user must determine from case to case whether a product is suitable for the intended use.

see also...
- *Levelling feet GN 440.1 / GN 440.6 (with fixing lug)* → *Page 834*
- *Levelling feet GN 440 / GN 440.5 (with threaded stud)* → *Page 832*

Steel-Levelling foot 1 2 3 GN 440-50-M10-OS		
	1	d_1
	2	d_2
	3	Type

Stainless Steel-Levelling foot 1 2 3 GN 440.5-60-M16-GV		
	1	d_1
	2	d_2
	3	Type

Levelling feet

with threaded stud

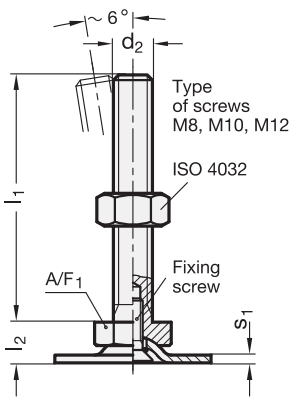

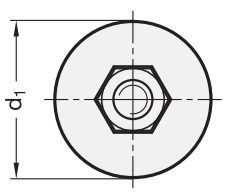

Type **OS**

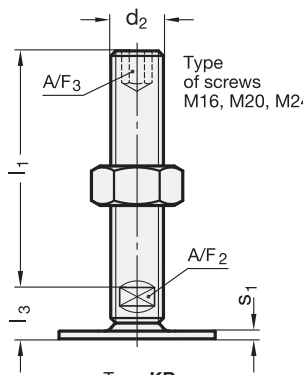

Type **KR**

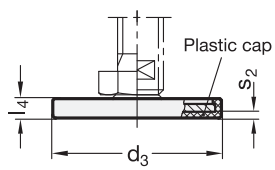

Type **GV**

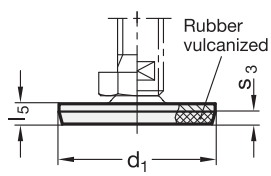

Rost frei — Inox Stainless Steel

Inch — Inch sizes available

4 Type

OS without plastic cap
KR with plastic cap, non-gliding
GV with rubber, vulcanized

1 d_1	2 d_2	3 l_1					d_3	l_2	l_3	l_4	l_5	s_1	s_2	s_3	A/F_1	A/F_2	A/F_3	Static load in kN (see information) GN 440	GN 440.5
40	M 8	40	50	63	-	-	43	10,5	-	5	5,5	2	1,5	3,5	17	-	-	7	8
40	M 10	50	60	80	100	-	43	10,5	-	5	5,5	2	1,5	3,5	17	-	-	7	12
40	M 12	60	80	100	125	-	43	10,5	-	5	5,5	2	1,5	3,5	17	-	-	7	12
40	M 16	75	100	125	150	200	43	-	16,5	5	5,5	2	1,5	3,5	-	12	8	7	12
50	M 8	40	50	63	-	-	54	11	-	6	6,5	2,5	2	4	17	-	-	8	8
50	M 10	50	60	80	100	-	54	11	-	6	6,5	2,5	2	4	17	-	-	8	14
50	M 12	60	80	100	125	-	54	11	-	6	6,5	2,5	2	4	17	-	-	8	14
50	M 16	75	100	125	150	200	54	-	17	6	6,5	2,5	2	4	-	12	8	8	14
60	M 8	40	50	63	-	-	64	11	-	6	7	2,5	2	4,5	17	-	-	8	8
60	M 10	50	60	80	100	-	64	11	-	6	7	2,5	2	4,5	17	-	-	10	14
60	M 12	60	80	100	125	-	64	11	-	6	7	2,5	2	4,5	17	-	-	10	16
60	M 16	75	100	125	150	200	64	-	17	6	7	2,5	2	4,5	-	12	8	10	16
80	M 8	40	50	63	-	-	84	11	-	7	8	3	2	5	17	-	-	8	8
80	M 10	50	60	80	100	-	84	11	-	7	8	3	2	5	17	-	-	10	14
80	M 12	60	80	100	125	-	84	11	-	7	8	3	2	5	17	-	-	12	20
80	M 16	75	100	125	150	200	84	-	17	7	8	3	2	5	-	12	8	12	20
80	M 20	75	100	125	150	200	84	-	18	7	8	3	2	5	-	15	10	16	20
80	M 24	100	125	150	200	-	84	-	20	7	8	3	2	5	-	19	12	16	22

Specification

- **GN 440**
  Steel zinc plated, blue passivated
  - Foot for type GV
    Stainless Steel AISI 304
  - Screw
    Tensile strength class 5.8 (500/mm²)
- **GN 440.5**
  Stainless Steel
  - Foot / Hexagon nut AISI 304
  - Screw AISI 303

This information applies to both standards:

- Fixing screw
  Stainless Steel A2, loctited
- Plastic cap
  - Elastomer (TPE)
  - 73 shore, black
- Rubber underlay (NBR)
  - 70±5 shore, black
  - vulcanized
- *Elastomer characteristics → Page 1140*
- *Stainless Steel characteristics → Page 1144*
- RoHS compliant

Information

Levelling feet GN 440 / GN 440.5 are an easy and very reasonably priced foot design variant.

The static load capacity in the table above are based on a series of tests whereby a vertical load in relation to the horizontal plane of the foot is applied. For the values given in the table, the strain relief may result in minor deformations of the foot.

The details relating to the load bearing capacity are non-binding recommended values and rule out any liability. They constitute no general warranty of quality and condition. The user must determine from case to case whether a product is suitable for the intended use.

see also...
- *Levelling feet GN 440.1 / GN 440.6 (with fixing lug) → Page 836*
- *Levelling feet GN 440 / GN 440.5 (with internal thread) → Page 830*

Steel-Levelling feet		
GN 440-50-M12-80-OS (1 2 3 4)	1	d_1
	2	d_2
	3	l_1
	4	Type

Stainless Steel-Levelling feet		
GN 440.5-80-M12-60-KR (1 2 3 4)	1	d_1
	2	d_2
	3	l_1
	4	Type

Levelling feet

with fixing lug, with female thread

Type **OS**

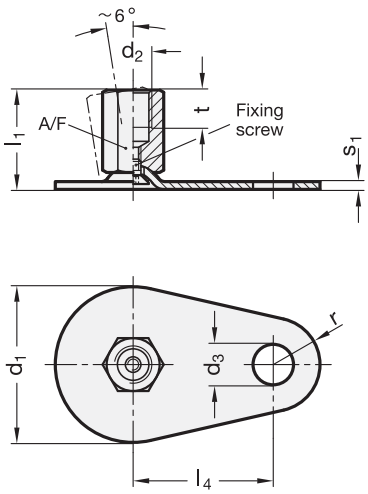

Type **KR**

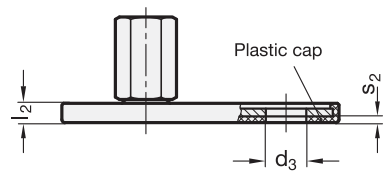

Type **GV**

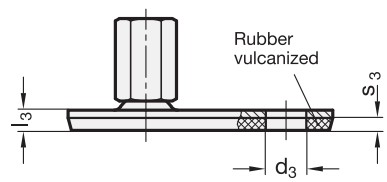

Inox Stainless Steel

3 Type

OS without plastic cap
KR with plastic cap, non-gliding
GV with rubber, vulcanized

1 d_1	2 d_2	d_3	l_1	l_2	l_3	l_4	r	s_1	s_2	s_3	A/F	t min.	Static load in kN GN 440.1	Static load in kN GN 440.6
50	M 8	13	25	6	6,5	45	15	2,5	2	4	14	8	8	8
50	M 10	13	28	6	6,5	45	15	2,5	2	4	14	10	8	14
50	M 12	13	32	6	6,5	45	15	2,5	2	4	17	12	8	14
50	M 16	13	37	6	6,5	45	15	2,5	2	4	22	16	8	14
60	M 8	13	25	6	7	50	15	2,5	2	4,5	14	8	8	8
60	M 10	13	28	6	7	50	15	2,5	2	4,5	14	10	10	14
60	M 12	13	32	6	7	50	15	2,5	2	4,5	17	12	10	16
60	M 16	13	37	6	7	50	15	2,5	2	4,5	22	16	10	16
80	M 8	13	26	7	8	70	15	3	2	5	14	8	8	8
80	M 10	13	29	7	8	70	15	3	2	5	14	10	10	14
80	M 12	13	32	7	8	70	15	3	2	5	17	12	12	20
80	M 16	13	38	7	8	70	15	3	2	5	22	16	12	20
80	M 20	13	45	7	8	70	15	3	2	5	27	20	16	20

Specification

- **GN 440.1**
  Steel
  - zinc plated, blue passivated
  - Foot for type GV
    Stainless Steel AISI 304
  - Threaded bush
    Tensile strength class 5.8 (500 N/mm²)
- **GN 440.6**
  Stainless Steel
  - Foot AISI 304
  - Threaded bush AISI 303

This information applies to both standards:

- Fixing screw
  Stainless Steel A2, loctited
- Plastic cap
  Elastomer (TPE)
  73 Shore, black
- Rubber underlay (NBR)
  70±5 Shore, black
  vulcanized
- *Elastomer characteristics → Page 1140*
- *Stainless Steel characteristics → Page 1144*
- RoHS compliant

Information

Levelling feet GN 440.1 / GN 440.6 are an easy and very reasonably priced foot design variant.

The static load bearing capacity given in the table rests on a test series in which the load has been applied perpendicular to the plate. For the values given in the table, the strain relief may result in minor deformations of the foot. The details relating to the load bearing capacity are non-binding recommended values and rule out any liability.

They constitute no general warranty of quality and condition. The user must determine from case to case whether a product is suitable for the intended use.

see also...
- *Levelling feet GN 440 → Page 830*
- *Stainless Steel-Levelling feet GN 440.5 → Page 830*

Steel-Levelling foot		
1 2 3	1	d_1
GN 440.1-60-M16-GV	2	d_2
	3	Type

Stainless Steel-Levelling foot		
1 2 3	1	d_1
GN 440.6-80-M16-KR	2	d_2
	3	Type

Levelling feet

with fixing lug

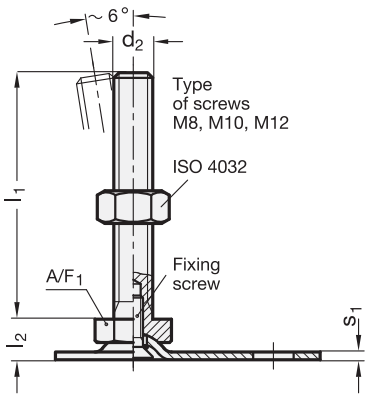

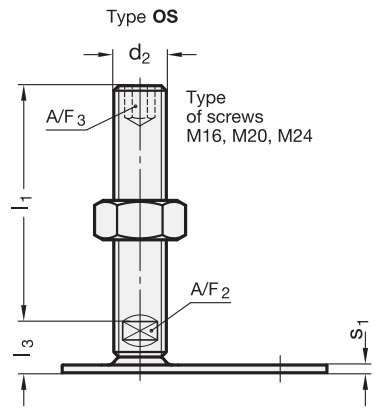

Inox Stainless Steel

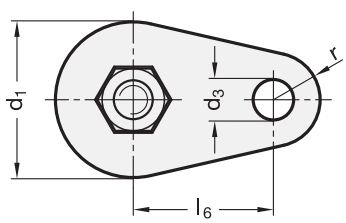

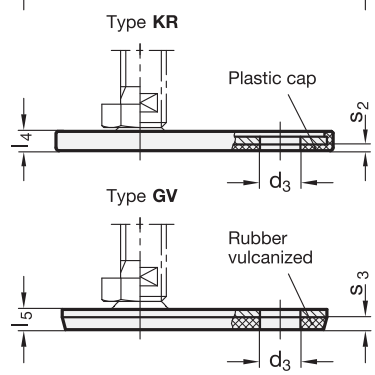

4 Type

OS without plastic cap
KR with plastic cap, non-gliding
GV with rubber, vulcanized

1 d_1	2 d_2	3 l_1					d_3	l_2	l_3	l_4	l_5	l_6	r	s_1	s_2	s_3	A/F_1	A/F_2	A/F_3	Static load in kN	
																				GN 440.1	GN 440.6
50	M 8	40	50	63	-	-	13	11	-	6	6,5	45	15	2,5	2	4	17	-	-	8	8
50	M 10	50	60	80	100	-	13	11	-	6	6,5	45	15	2,5	2	4	17	-	-	8	14
50	M 12	60	80	100	125	-	13	11	-	6	6,5	45	15	2,5	2	4	17	-	-	8	14
50	M 16	75	100	125	150	200	13	-	17	6	6,5	45	15	2,5	2	4	-	12	8	8	14
60	M 8	40	50	63	-	-	13	11	-	6	7	50	15	2,5	2	4,5	17	-	-	8	8
60	M 10	50	60	80	100	-	13	11	-	6	7	50	15	2,5	2	4,5	17	-	-	10	14
60	M 12	60	80	100	125	-	13	11	-	6	7	50	15	2,5	2	4,5	17	-	-	10	16
60	M 16	75	100	125	150	200	13	-	17	6	7	50	15	2,5	2	4,5	-	12	8	10	16
80	M 8	40	50	63	-	-	13	11	-	7	8	70	15	3	2	5	17	-	-	8	8
80	M 10	50	60	80	100	-	13	11	-	7	8	70	15	3	2	5	17	-	-	10	14
80	M 12	60	80	100	125	-	13	11	-	7	8	70	15	3	2	5	17	-	-	12	20
80	M 16	75	100	125	150	200	13	-	17	7	8	70	15	3	2	5	-	12	8	12	20
80	M 20	75	100	125	150	200	13	-	18	7	8	70	15	3	2	5	-	15	10	16	20
80	M 24	100	125	150	200	-	13	-	20	7	8	70	15	3	2	5	-	19	12	16	22

Specification

- **GN 440.1**
  Steel
  - zinc plated, blue passivated
  - Foot for type GV
    Stainless Steel AISI 304
  - Screw
    Tensile strength class 5.8 (500 N/mm²)
- **GN 440.6**
  Stainless Steel
  - Foot / Hexagonal nut AISI 304
  - Screw AISI 303

This information applies to both standards:

- Fixing screw
  Stainless Steel A2, loctited
- Plastic cap
  Elastomer (TPE)
  73 Shore, black
- Rubber underlay (NBR)
  70±5 Shore, black
  vulcanized
- *Elastomer characteristics* → *Page 1140*
- *Stainless Steel characteristics* → *Page 1144*
- RoHS compliant

Information

Levelling feet GN 440.1 / GN 440.6 are an easy and very reasonably priced foot design variant.

The static load bearing capacity given in the table rests on a test series in which the load has been applied perpendicular to the plate. For the values given in the table, the strain relief may result in minor deformations of the foot. The details relating to the load bearing capacity are non-binding recommended values and rule out any liability.

They constitute no general warranty of quality and condition. The user must determine from case to case whether a product is suitable for the intended use.

see also...
- *Levelling feet GN 440 / GN 440.5 (without fixing lug)* → *Page 832*
- *Levelling feet GN 440.1 / GN 440.6 (with internal thread)* → *Page 834*

Steel-Levelling feet		
GN 440.1-60-M16-75-GV (1 2 3 4)	1	d_1
	2	d_2
	3	l_1
	4	Type

Stainless Steel-Levelling feet		
GN 440.6-80-M20-200-OS (1 2 3 4)	1	d_1
	2	d_2
	3	l_1
	4	Type

Levelling feet

with vibration damping element

Identification **1**

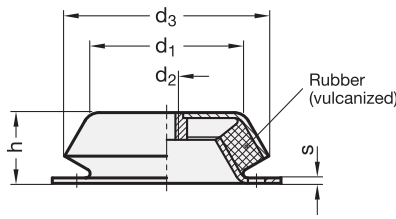

Identification **2**

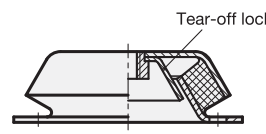

Type **A**

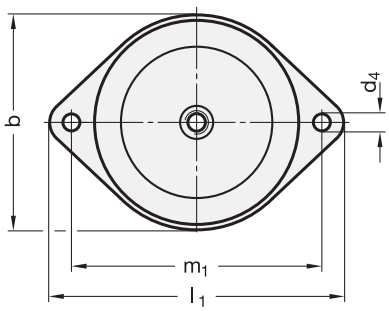

Type **B**

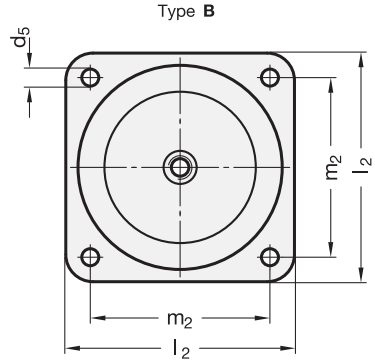

3 Type

A with two-hole flange (d_1 = 60 / 90 / 113)

B with four-hole flange (d_1 = 113 / 126)

4 Identification

1 without tear-off lock

2 with tear-off lock

1 d_1	2 d_2	d_3	d_4 Type A	d_5 Type B	h	s	b Type A	l_1 Type A	l_2 Type B	m_1 Type A	m_2 Type B
60	M 10	78	9	-	30	2	78	128	-	110	-
90	M 12	106	13	-	39	3	110	170	-	140	-
113	M 16	150	12,5	12,5	52	4	150	216	168	184	132
126	M 20	177	-	13	63	4	-	-	184	-	150

* not availble from stock, requires a minimum order quantity

Specification

5

- Vibration damping element
  Natural rubber (NR)
  - vulcanized
  - temperature resistant up to 80 °C
  - Hardness [Shore ±5 °]
    soft* **43**
    medium **57**
    hard* **68**
- Sheet metal
  zinc plated, blue passivated
- Threaded insert
  Steel
  zinc plated, blue passivated
- *Elastomer characteristics* → *Page 1140*
- RoHS compliant

Information

Levelling feet GN 148 are designed for setting up heavy machinery and units with insulation against vibrations.

This has a positive impact on the lifetime of machines and additionally reduces the noise pollution.

The structure is such that horizontal forces are also absorbed.

The design with tear-off lock (Type 2) protects the levelling feet from destruction caused by tear-off under excessive tension loads.

The details relating to the load bearing capacity are non-binding recommended values and rule out any liability. They constitute no general warranty of quality and condition. The user must determine from case to case whether a product is suitable for the intended use.

see also...
- *Determining the suitable levelling foot* → *Page 840*

Accessory

- Rubber pads GN 148.2 → *Page 841*

How to order

1 2 3 4 5
GN 148-113-M16-A-1-57

1	d_1
2	d_2
3	Type
4	Identification
5	Hardness

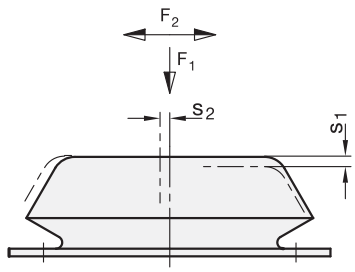

Terms

F_1 = static load in vertical direction (pressure)

F_2 = static load in horizontal direction (lateral thrust)

s_1 = Compression in vertical direction (spring excursion) under load through F_1

s_2 = Compression in vertical direction (spring excursion) under load through F_2

Stiffness R:
is the load which causes the damping elements to be compressed by 1 mm (spring rate)

Equation for calculating the stiffness: $R = \frac{F}{s}$

The table below gives details on the maximum static load F, the maximum rated compression and the resulting stiffness R.

The method shown on page 114 and the values given below allow the maximum degree of insulation of the vibration to be determined as factor of the interference frequency.

d_1	Hardness in Shore	max. static load F_1 in N	Stiffness R_1 in N/mm	max. compression s_1 in mm	max. static load F_2 in N	Stiffness R_2 in N/mm	max. Compres-seion s_2 in mm
60	43*	1100	340	3,2	2300	770	3
60	57	1750	550	3,2	3400	1130	3
60	68*	2800	930	3	4000	1330	3
90	43*	1500	430	3,5	3000	750	4
90	57	2800	800	3,5	5000	1330	3,75
90	68*	4500	1290	3,5	7000	1870	3,75
113	43*	3500	1000	3,5	4500	1290	3,5
113	57	6500	1860	3,5	7500	2140	3,5
113	68*	10000	2860	3,5	11000	3140	3,5
126	43*	7500	2140	3,5	9000	2570	3,5
126	57	12500	3570	3,5	15000	4290	3,5
126	68*	19000	5340	3,5	22500	6430	3,5

* not availble from stock, requires a minimum order quantity

Example of application

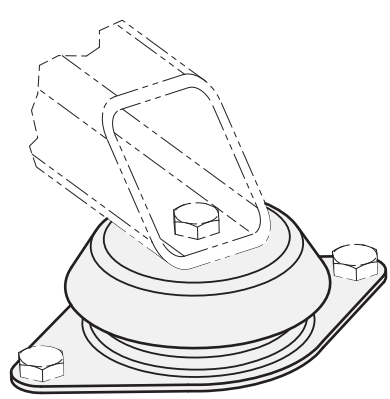

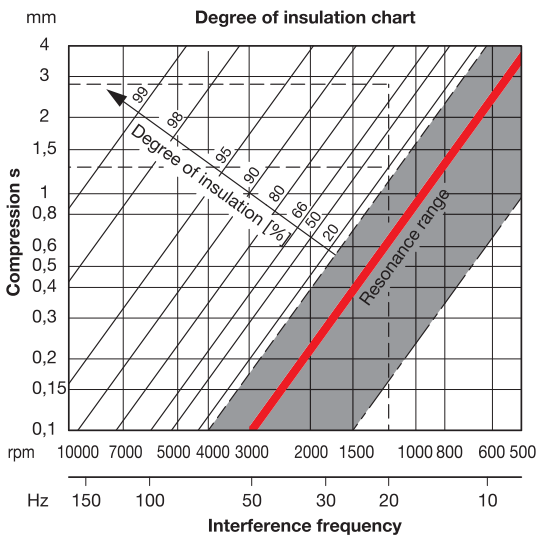

Terms

Interference frequency [Hz]:
is the frequency emanating from a machine, e.g. the machine main shaft speed [rpm].

Static load F [N]:
is the load acting on each vibration-damping element (levelling foot).

Degree of insulation [%]:
is the measure for absorbing the interference frequency (damping).

Compression s [mm]:
is the change in height of the damping element (spring excursion).

Stiffness R [N/mm]:
is the load which causes a damping element to be compressed by 1 mm (spring rate).

Determining the suitable levelling foot and the maximum degree of insulation

First, the static load F for each levelling foot must be determined. For well arranged levelling feet and the resulting even distribution of the load F, the static load is calculated using the following equation:

$$\frac{\text{Weight force of the machine [N]}}{\text{Number of levelling feet}} = \text{Static load F [N] / per levelling foot}$$

Once the static load F has been calculated, select a levelling foot from the table. Please note that the static load F should be as close as possible to the static load capacity, but without exceeding it. The associated stiffness R of the selected leg is also shown in the table.

The actual compression is then calculated using the equation below.

$$\frac{\text{Static load F [N] / per levelling foot}}{\text{Stiffness R [N/mm]}} = \text{actual compression s [mm]}$$

Starting from the actual compression s calculated, the maximum degree of insulation as factor of the interference frequency can now be read in the above chart.

To optimise the maximum degree of insulation, change the number of feet such that the static load F of each levelling foot is as close as possible below a static load capacity value given in the table. This will increase the compression s which, in turn, improves the degree of insulation.

In general, medium and high frequencies can be very well insulated with an adequate compression.

Rubber pads

for levelling feet GN 148

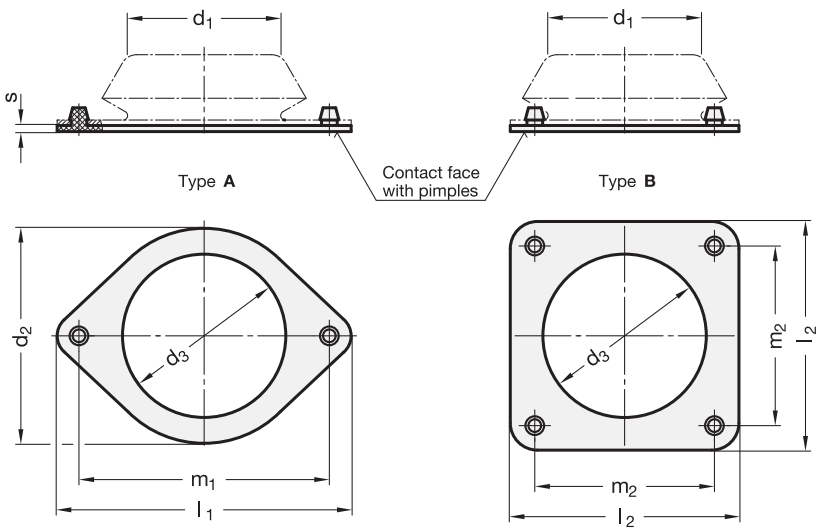

2 Type

A for two-hole flange (d_0 = 60 / 90 / 113)

B for four-hole flange (d_0 = 113 / 126)

d_1 Ø Levelling foot GN 148	l_1 (1) Type A	l_2 (1) Type B	d_2 Type A	d_3	m_1 Type A	m_2 Type B	s
60	128	-	78	65	110	-	3
90	170	-	110	90	140	-	3
113	216	168	150	120	184	132	4
126	-	184	-	150	-	150	4

Specification

- Rubber (NBR)
  - 68 Shore, black
  - oil resistant
- *Elastomer characteristics → Page 1140*
- RoHS compliant

Information

Rubber pads GN 148.2 in connection with GN 148 levelling feet are used for setting up machines and units if no firm bolt connection to the ground is required.

To be fixed to the levelling foot, they are snapped into the attachment bore holes of the flanges. Small pimples at the bottom face of the rubber pads enhance the stability.

see also...
- *Levelling feet GN 148 → Page 838*

How to order		
GN 148.2-168-B (1 = l_2 (l_1), 2 = Type)	1	l_2 (l_1)
	2	Type

Insert bushes

for profiled square tubes

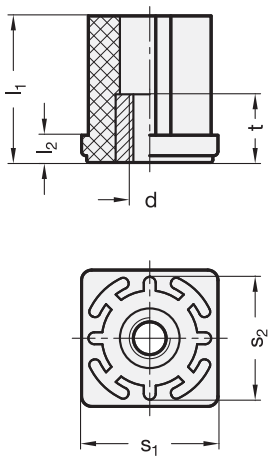

Installation example

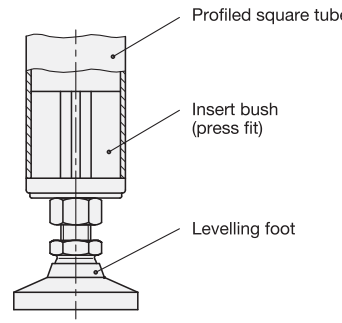

ELESA original design ND.Q

1 s_1	2 s_2	3 d	l_1	l_2	t	Tube dimensions outside	inside	Wall thickness	Static load in N (see information)
30	27	M 8	33	6	15	30	27	1,5	17000
30	27	M 10	33	6	15	30	27	1,5	17000
30	27	M 12	33	6	18	30	27	1,5	17000
30	27	M 16	33	6	20	30	27	1,5	17000
40	36	M 8	43	8	15	40	36	2	18000
40	36	M 10	43	8	15	40	36	2	18000
40	36	M 12	43	8	18	40	36	2	18000
40	36	M 16	43	8	20	40	36	2	18000
50	45	M 12	55	10	18	50	45	2,5	20000
50	45	M 16	55	10	20	50	45	2,5	20000
50	45	M 20	55	10	30	50	45	2,5	20000
50	46	M 12	55	10	18	50	45	2	20000
50	46	M 16	55	10	20	50	45	2	20000
50	46	M 20	55	10	30	50	45	2	20000

Specification

- Plastic (Polyamide PA)
  - glass fibre reinforced
  - black, matt
  - temperature resistant up to 120 °C
- Bush
  Brass, nickel-plated
- *Plastic characteristics → Page 1141*
- RoHS compliant

Information

Insert bushes GN 348 offer the possibility of mounting screws in profiled square tubes. The bushes are held in place via the tapered plug-in section in the tube.

The values given in the table regarding the static load capacity serve as a guide only and if these are exceeded serious permanent deformation or breakage of the insert bushes could occur.

The details relating to the load bearing capacity are non-binding recommended values and rule out any liability. They constitute no general warranty of quality and condition. The user must determine from case to case whether a product is suitable for the intended use.

see also...

- *Insert bushes GN 992 / GN 992.5 → Page 843*

How to order		
GN 348-30-27-M12 (1 2 3)	1	s_1
	2	s_2
	3	d

Insert bushes

for construction tubes GN 990

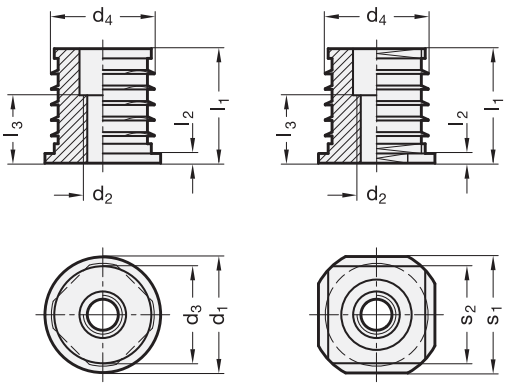

Application example

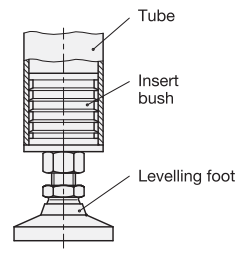

Rost frei — Inox Stainless Steel

1 d_1 GN 992 Outside-Ø for tube, round	d_1 GN 992.5 Outside-Ø for tube, round	1 s_1 GN 992 Outside-⧄ for tube, square	s_1 GN 992.5 Outside-⧄ for tube, square	2 d_2	d_2	d_3 Inside-Ø	s_2 Inside-⧄	d_4 Lamella-Ø	l_1 GN 992	l_1 GN 992.5	l_2	l_3 +0,5
D 20	D 20	V 20	V 20	M 8	-	16	16	16,5	29,5	29,5	2,5	16
D 25	D 25	V 25	V 25	M 8	M 10	21	21	21,5	33,5	29,5	2,5	16
D 30	D 30	V 30	V 30	M 8	M 10	26	26	26,5	33,5	29,5	2,5	18
D 32	-	-	-	M 8	M 10	28	-	28,5	33,5	29,5	2,5	18
D 35	-	V 35	-	M 10	M 12	31	31	31,5	37,5	29,5	2,5	24
D 40	D 40	V 40	V 40	M 10	M 12	34	34	34,5	41,5	33,5	2,5	24
D 42	-	-	-	M 10	M 12	36	-	36,5	41,5	33,5	2,5	24
D 45	-	V 45	-	M 12	M 16	39	39	39,5	45,5	37,5	2,5	30
D 48	-	-	-	M 12	M 16	42	-	42,5	45,5	37,5	2,5	30
D 50	D 50	V 50	V 50	M 12	M 16	44	44	44,5	45,5	37,5	2,5	30

Specification

- **GN 992**
  Aluminium
  blank
- **GN 992.5**
  Stainless Steel AISI 303
- *Stainless Steel characteristics* → *Page 1144*

Information

Insert bushes GN 992 / GN 992.5 offer the possibility of mounting screws in profiled tubes. They are matched for construction tubes GN 990.

With their lamellas, insert bushes can bridge a production tolerance of the internal diameter or of the internal square of ±0,5 mm. Use a soft mallet to drive in the insert bushes.

see also...

- *Construction tubes GN 990* → *Page 1027*

Aluminium-Insert bushes		
GN 992-D40-M10 (1 = d_1 (s_1), 2 = d_2)	1	d_1 (s_1)
	2	d_2

Stainless Steel-Insert bushes		
GN 992.5-V25-M8 (1 = s_1 (d_1), 2 = d_2)	1	s_1 (d_1)
	2	d_2

Threaded mounting plates

for levelling feet

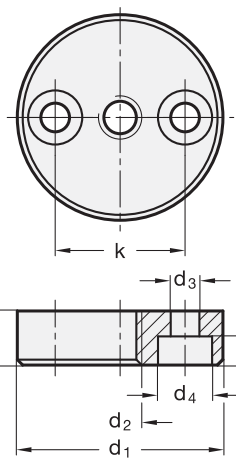

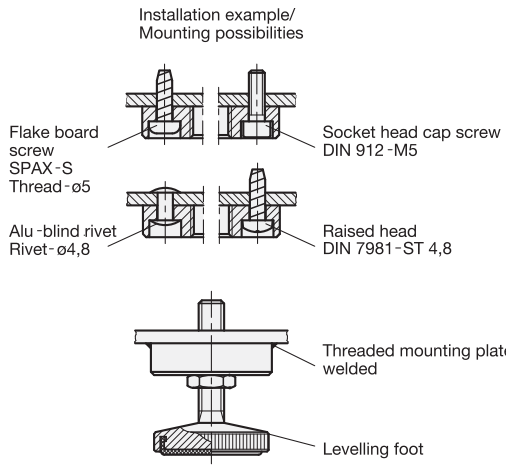

1	2							
d_1	d_2			d_3	d_4	h	k	t
36	M 8	M 10	M 12	5,3	10	10	24	5,3

Specification

- Steel
  - weldable
  - blackened
- RoHS compliant

Information

Threaded mounting plates GN 349 are used on levelling feet particularly in such cases where a machine shrouding is made of very thin sheet metal.

How to order		
GN 349-36-M10 (1: 36, 2: M10)	1	d_1
	2	d_2

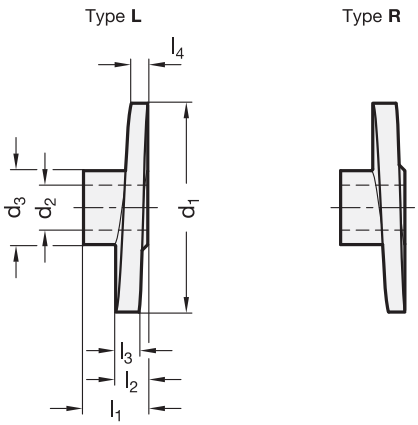

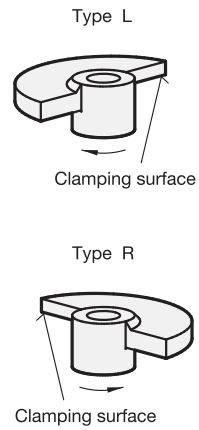

4 Type

L clamping direction left turn

R clamping direction right turn

2 d_1	3 d_2 H8 Bore		d_3	l_1 ≈	l_2	l_3	l_4
35	B 8	B 10	18	15	7	7	3
65	B 12	-	23	20	10	7	5
80	B 16	-	27	24	12	9	6

Specification

1

- Sintered Steel black, steam oxidized **SM**
- *ISO-Fundamental tolerances → Page 1132*
- RoHS compliant

How to order		
1 2 3 4	1	**Material**
GN 218-SM-35-B10-L	2	d_1
	3	d_2
	4	**Type**

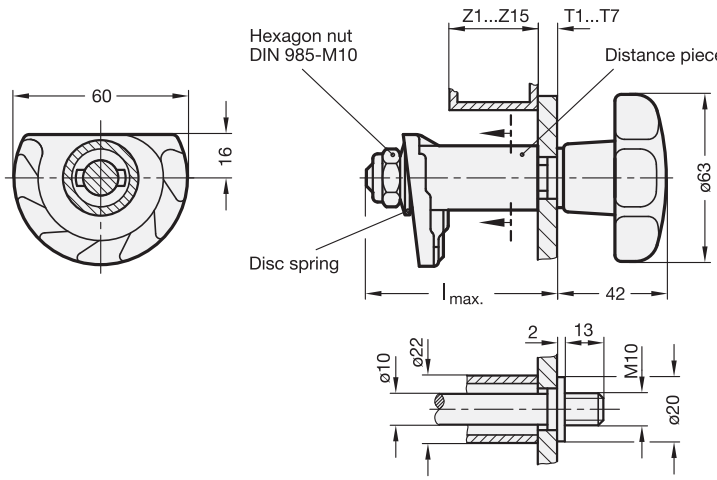

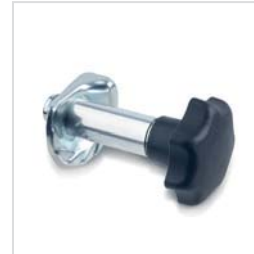

1 Type

SG with star knob
GB with threaded bolt

2

Door thickness **T1 ... T7**						
T 1	T 2	T 3	T 4	T 5	T 6	T 7
1,5-3	3-4,5	4,5-6	6-7,5	7,5-9	9-10,5	10,5-12

3

Door frame thickness **Z 1 ... Z15**														
Z 1	Z 2	Z 3	Z 4	Z 5	Z 6	Z 7	Z 8	Z 9	Z 10	Z 11	Z 12	Z 13	Z 14	Z 15
0-9	3-12	6-15	9-18	12-21	15-24	18-28	21-30	24-33	27-36	30-39	33-42	36-45	39-48	42-51

Max. Bolt length $l_{max.}$ for T + Z											
T + Z	T + Z	T + Z	T + Z	T + Z	T + Z	T + Z	T + Z	T + Z	T + Z	T + Z	T + Z
≤ 13,5	≤ 18	≤ 22,5	≤ 27	≤31,5	≤ 36	≤ 40,5	≤ 45	≤ 49,5	≤ 54	≤ 58,5	≤ 63
31	35,5	40	44,5	49	53,5	58	62,5	67	71,5	76	80,5

Specification

- Star knob DIN 6336
  Plastic (Polyamide PA)
  black, matt
- Cam latch
  Sheet Steel
- Bolt and distance piece
  Steel
- All steel parts
  zinc plated, blue passivated
- *Plastic characteristics → Page 1141*
- RoHS compliant

Information

Latches GN 117 are vibration proof and they have a pulling-in range of up to 10 mm. Locking is achieved by turning the knob clockwise.

Attention is drawn to its simple and hence cost saving installation.

Type GB (with threaded bolt) has been introduced to accept other types of handles besides the star knob.

How to order		
1 2 3	1	**Type**
GN 117-SG-T2-Z5	2	**Door thickness T**
	3	**Door frame thickness Z**

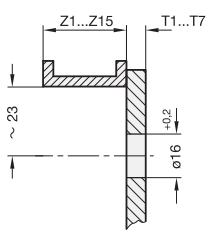

Construction and assembly instructions

By turning the latch clockwise the stepped and spring loaded cam latch moves up behind the door frame and pulls the door in.

The large pulling-in range of the cam (10 mm) allows these locks to be used successfully on doors with sealing strips. When selecting distance ‚Z‘ the tickness of the door seal might have to be taken into consideration.
The spring loaded cam (disc spring) prevents the door from opening under vibration.

A hole of 16 mm Ø is required in the door at a distance of 23 mm from door frame to hole centre. The bolt is inserted from the front. The distance piece, cam latch and disc springs follow on the shaft on the inside in that sequence.
The self locking nut is fitted with a torque to allow free movement of the latch.

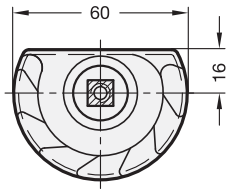

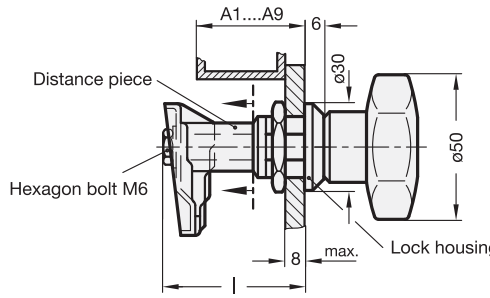

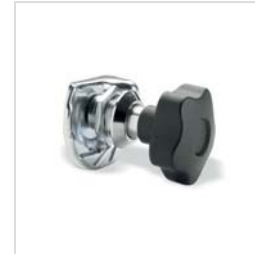

1 Type

SG	Operation with star knob
DK	Operation with triangular spindle (DK7)
VK7	Operation with square spindle A/F7
VK8	Operation with square spindle A/F8
VDE	Operation with double bit (VDE5)

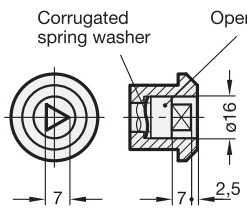

Type **DK**

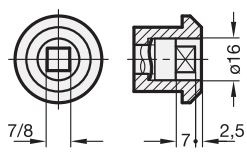

Type **VK7/VK8**

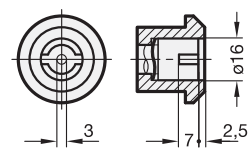

Type **VDE**

2

Clamping range **A1...A9** (Door + frame thickness)								
A 1 (l = 28)	A 2 (l = 33)	A 3 (l = 38)	A 4 (l = 43)	A 5 (l = 48)	A 6 (l = 53)	A 7 (l = 58)	A 8 (l = 63)	A 9 (l = 68)
17 - 25	22 - 30	27 - 35	32 - 40	37 - 45	42 - 50	47 - 55	52 - 60	57 - 65

Specification

- Lock housing / operating spindle
  Zinc die casting, chrome plated
- Cam latch
  Sheet Steel zinc plated, blue passivated
- Distance piece
  Aluminium
- Star knobs GN 5337.2
  Plastic (Polypropylene PP)
  black, matt
- RoHS compliant

Accessories

- Key GN 119.2 → *Page 870*
  (Zinc die casting,
  black plastic coated)
  - Key for triangle spindle
    GN 119.2-86-DK7-SW
  - Key for square spindle
    GN 119.2-86-VK7-SW
    GN 119.2-86-VK8-SW
  - Key for double bit
    (similar to DIN 43668)
    GN 119.2-86-VDE5-SW

Information

Latches GN 119 have a pulling-in range of 10 mm. Locking is achieved by turning the door lock clockwise.

see also...
- *Stainless Steel-Latches GN 119 → Page 850*
- *Sheet metal punches GN 123 → Page 876*
- *Opening handles GN 320 → Page 869*

How to order		
GN 119-VK8-A3 (1 = VK8, 2 = A3)	1	**Type**
	2	**Clamping range A**

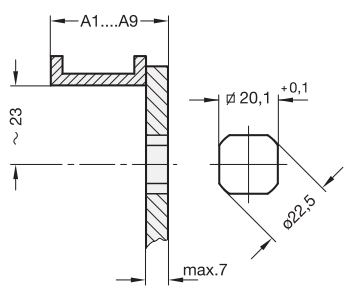

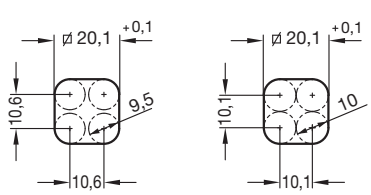

Construction and assembly instructions

By turning the latch clockwise the stepped cam latch moves up behind the door frame and pulls the door in.

The large pulling-in range of the cam (10 mm) allows these locks to be used successfully on doors with sealing strips. When selecting clamping range ‚A' the thickness of the door seal might have to be taken into consideration.

To fit the lock, the door will have to be provided with a hole as per sketch shown at a distance from the door frame to hole center of 23 mm.

The lock housing with the operating spindle is fitted into the hole from the front and held in position with the hexagon nut. The distance piece and the cam latch are then fitted at the rear and fixed with the hexagon nut.

In volume production, the **mounting borehole** in the door leaf is usually made by punching or laser machining.

For small series and steel sheets below 2 mm thickness, the sheet metal punches GN 123 are the tool of choice → *Page 876.*

The assembly borehole can also be set by drilling / milling as shown in the outline drawing opposite.

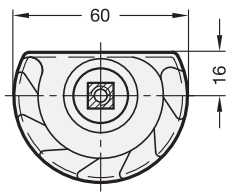

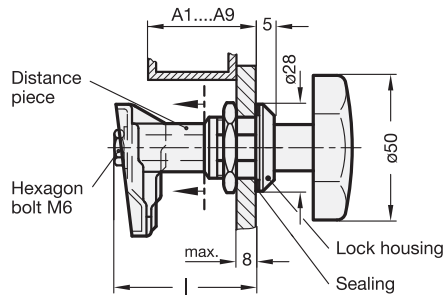

Inox Stainless Steel

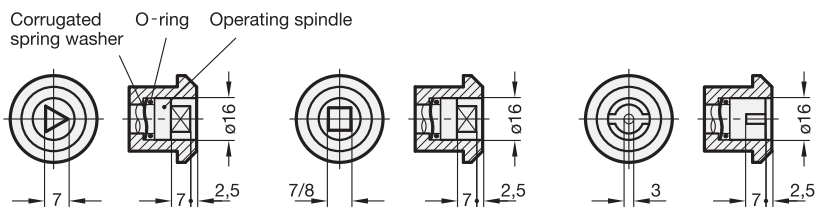

Type **DK** Type **VK7/VK8** Type **VDE**

1 Type

SG	Operation with star knob
DK	Operation with triangular spindle (DK7)
VK7	Operation with square spindle A/F7
VK8	Operation with square spindle A/F8
VDE	Operation with double bit

2

Clamping range **A1...A9** (Door + frame thickness)								
A 1 (l = 28)	A 2 (l = 33)	A 3 (l = 38)	A 4 (l = 43)	A 5 (l = 48)	A 6 (l = 53)	A 7 (l = 58)	A 8 (l = 63)	A 9 (l = 68)
17 - 25	22 - 30	27 - 35	32 - 40	37 - 45	42 - 50	47 - 55	52 - 60	57 - 65

Specification

3

- Stainless Steel AISI 303 (Cam latch AISI 304) **NI**
- Stainless Steel-Star knob GN 5334 AISI 304
- Protection class IP 65
- *Stainless Steel characteristics → Page 1144*
- RoHS compliant

Accessories

- Key GN 119.2 → *Page 870* (Zinc die casting, black plastic coated)
  - Key for triangle spindle GN 119.2-86-DK7-SW
  - Key for square spindle GN 119.2-86-VK7-SW GN 119.2-86-VK8-SW
  - Key for double bit (similar to DIN 43668) GN 119.2-86-VDE5-SW

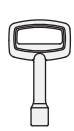

Information

Stainless Steel-Latches GN 119 have a pulling-in range of 10 mm. Locking is achieved by turning the latch clockwise.

The operating spindle is provided with an o-ring.

see also...

- *IP Protection classes → Page 1137*
- *Latches GN 119 (Steel zinc plated) → Page 848*
- *Sheet metal punches GN 123 → Page 876*
- *Opening handles GN 320 → Page 869*

How to order

1 2 3

GN 119-SG-A3-NI

1	**Type**
2	**Clamping range A**
3	**Material**

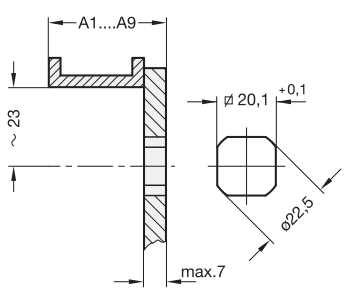

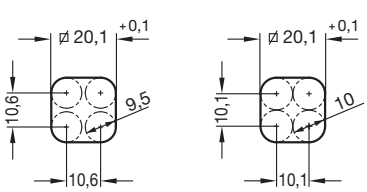

Construction and assembly instructions

By turning the Stainless Steel-Latch clockwise the stepped cam latch moves up behind the door frame and pulls the door in.

The large pulling-in range of the cam (10 mm) allows these locks to be used successfully on doors with sealing strips. When selecting clamping range ‚A' the thickness of the door seal might have to be taken into consideration.

To fit the lock, the door will have to be provided with a hole as per sketch shown at a distance from the door frame to hole center of 23 mm.

The lock housing with the operating spindle is fitted into the hole from the front and held in position with the hexagon nut. The distance piece and the cam latch are then fitted at the rear and fixed with the hexagon nut.

In volume production, the **mounting borehole** in the door leaf is usually made by punching or laser machining.

For small series and steel sheets below 2 mm thickness, the sheet metal punches GN 123 are the tool of choice → *Page 876.*

The assembly borehole can also be set by drilling / milling as shown in the outline drawing opposite.

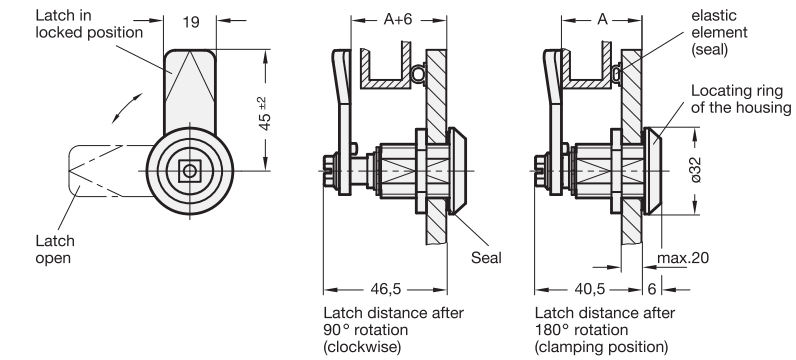

iF product design award

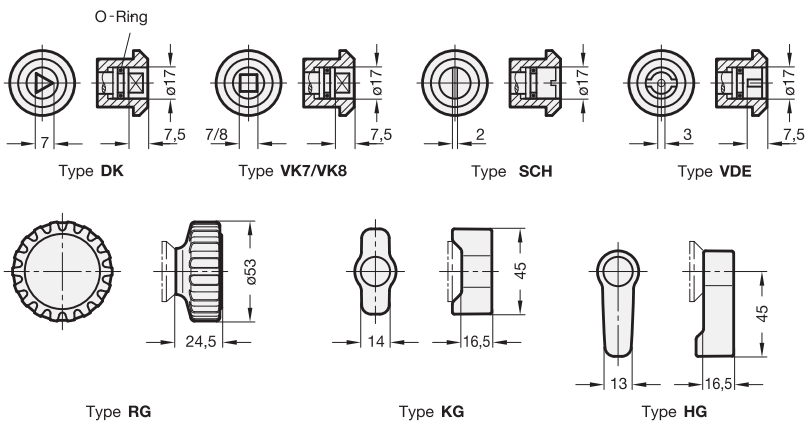

1 Type

DK	Operation with triangular spindle (DK7)
VK7	Operation with square spindle A/F7
VK8	Operation with square spindle A/F8
SCH	Operation with slot
VDE	Operation with double bit
RG	Operation with knurled knob GN 7336
KG	Operation with wrench
HG	Operation with lever

2

Latch distance **A** in retaining position (clamping position)																					
17	19	21	23	26	27	29	31	33	35	37	39	41	43	45	47	49	51	53	55	58	63

Specification

- Housing / Locking mechanism
  Zinc die casting
- Locating ring
  plastic coated
  black, textured finish
- Latch
  Steel
  zinc plated, blue passivated
- all handles (Type RG / KG / HG)
  - Plastic (Polyamide PA)
    black, matt
  - Cover cap
    light grey, matt
- Protection class: IP 65
- RoHS compliant

Accessory

- Keys 119.2 → *Page 870*

Information

The rotary clamping latches GN 516 have a closing mechanism which transfers the rotary movement of the operating element (key) into a 90° turn and then into a 6 mm linear stroke.

This mechanism is designed for common applications such as making a tight and vibration-proof interlock in the end position (retaining position) in connection with an elastic element (door / casing seal).

22 latches with different cranks will cover latch distances (retaining zones) of between 17 and 63 mm. If the measured retaining position lies between two latch distances A, the next smaller value must be selected.

The rotary clamping latches GN 516 are supplied with the latch enclosed loose.

see also...
- *Rotary clamping latches GN 516.1 → Page 854*
- *Protection class IP information → Page 1137*

How to order		
GN 516-RG-26 (1 = Type, 2 = Latch distance A)	1	**Type**
	2	**Latch distance A**

1.

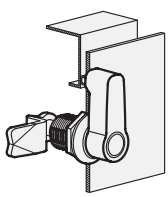

2.

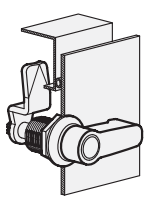

3.

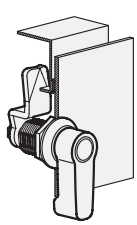

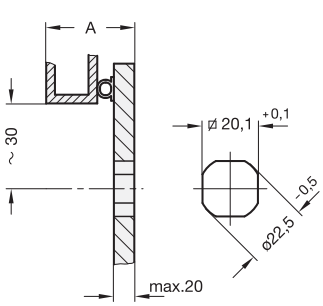

Technical and assembly instructions

1. Latch in starting position.
2. The first 90° turn of the actuator / key moves the latch into the usual locking position.
3. Turning the actuator further by another 90° will lift the latch in linear direction by 6 mm, pulling the door leaf against the frame or the seal and generating a vibration-proof lock.

max. torque:	4,5 Nm
max. axial force:	340 N
max. static load:	340 N

For **installation**, set a bore diameter in the door as shown in the outline drawing. Once assembled, the rotary clamping latch is pushed through the bore diameter from the front. The hexagonal nut can then be pushed over the latch from the back and bolted in place.

The **installation bore diameter** in the door leaf is usually generated by punching or laser application in series production.

For small series and steel sheets below 2 mm thickness, the sheet metal punches GN 123 are the tool of choice ➔ *Page 876*.

The installation bore diameter can also be set by drilling / milling as shown in the outline drawings below.

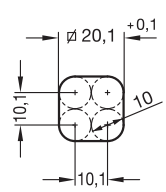

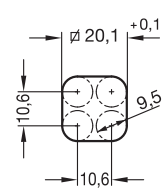

Rotary clamping latches

Locking distance A continuously adjustable

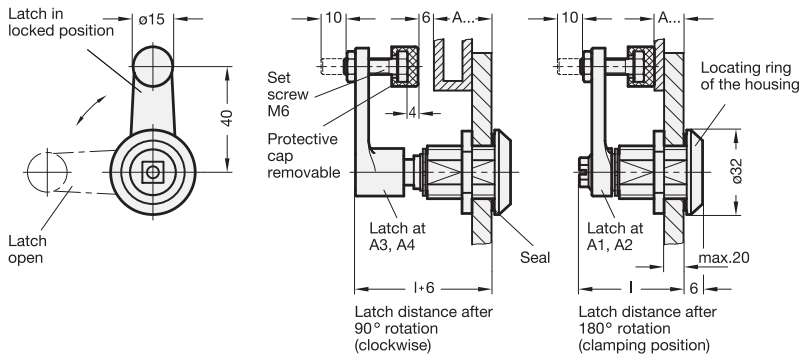

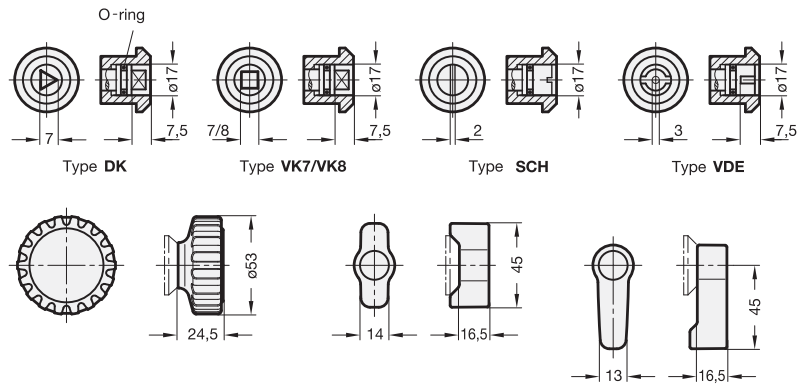

1 Type

DK	Operation with triangular spindle (DK7)
VK7	Operation with square spindle A/F7
VK8	Operation with square spindle A/F8
SCH	Operation with slot
VDE	Operation with double bit
RG	Operation with knurled knob GN 7336
KG	Operation with wrench
HG	Operation with lever

2

Latch distance **A1 ... A4** in retaining position (clamping position)			
A 1 (Length l = 40,5)	A 2 (Length l = 40,5)	A 3 (Length l = 56)	A 4 (Length l = 56)
1 ... 11	11 ... 21	21 ... 31	31 ... 41

Specification

- Housing / Locking mechanism Zinc die casting
- Locating ring plastic coated black, textured finish
- Latch Zinc die casting
- all handles (Type RG / KG / HG)
  - Plastic (Polyamide PA) black, matt
  - Cover caps light grey, matt
- Protective cap CR Neoprene©
  - 40 to 50 Shore A
  - black
- Protection class: IP 65
- *Plastic characteristics → Page 1141*
- RoHS compliant

Accessory

- Keys 119.2 → *Page 870*

Information

The rotary clamping latches GN 516.1 have a closing mechanism which transfers the rotary movement of the operating element (key) into a 90° turn and then into a 6 mm linear stroke.

This mechanism is designed for common applications such as making a tight and vibration-proof interlock in the end position (retaining position) in connection with the protective cap.

A 10 mm adjustment within the latch distances A1 ... A4 can be achieved by the set screw M6. This covers a clamping range from 1 to 41 mm consistently.

see also...
- *Technical and assembly instructions → Page 853*
- *Rotary clamping latches GN 516 → Page 852*
- *Protection class IP information → Page 1137*

How to order		
GN 516.1-HG-A2 (1 = HG, 2 = A2)	1	**Type**
	2	**Latch distance A**

Stainless Steel-Rotary clamping latches

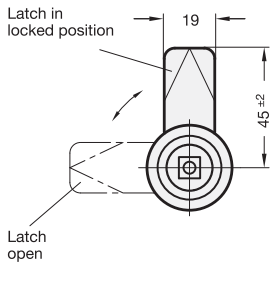

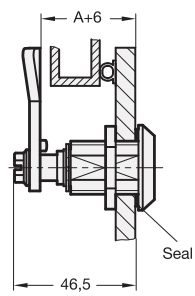

Latch distance after 90° rotation (clockwise)

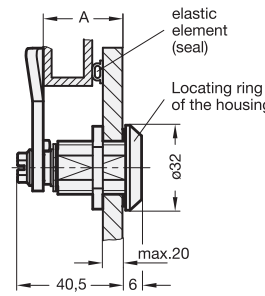

Latch distance after 180° rotation (clamping position)

Inox
Stainless
Steel

1 Type

VK8	Operation with square spindle A/F8
SCH	Operation with slot
VDE	Operation with double bit (VDE5)
RG	Operation with knurled knob GN 7336
KG	Operation with wrench
HG	Operation with lever

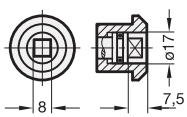

Type **VK8**

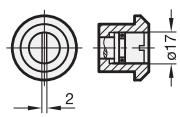

Type **SCH**

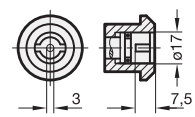

Type **VDE**

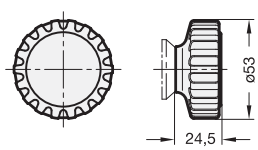

Type **RG**

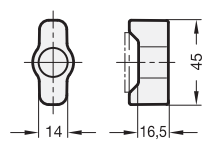

Type **KG**

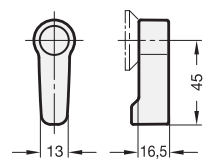

Type **HG**

2

Latch distance **A**								
19	23	27	31	33	35	37	39	41

Specification

- Stainless Steel
  - Housing AISI 316
  - Locking mechanism AISI 316
  - Bolt AISI 316
  - Latch AISI 304
- all handles (Type RG / KG / HG)
  - Plastic (Polyamide PA)
  - black, matt
  - Cover cap light grey matt
- Protection class: IP 65
- *Stainless Steel characteristics → Page 1144*
- RoHS compliant

Accessory

- Key GN 119.2 → *Page 870*

Information

The Stainless Steel-rotary clamping latches GN 516.5 have a closing mechanism which transfers the rotary movement of the operating element / key into a 90° turn and then into a 6 mm linear stroke.

This mechanism is designed for common applications such as making a tight and vibration-proof interlock in the end position (retaining position) in connection with an elastic element (door / casing seal).

9 latches with different cranks will cover latch distances (retaining zones) of between 19 and 41 mm. If the measured retaining position lies between two latch distances A, the next smaller value must be selected.

The rotary clamping latches GN 516.5 are supplied with the latch enclosed loose.

see also...

- *Technical and assembly instructions → Page 853*
- *Rotary clamping latches GN 516 (Zinc die casting) → Page 852*

How to order		
GN 516.5-VK8-19 (1 = VK8, 2 = 19)	1	**Type**
	2	**Latch distance A**

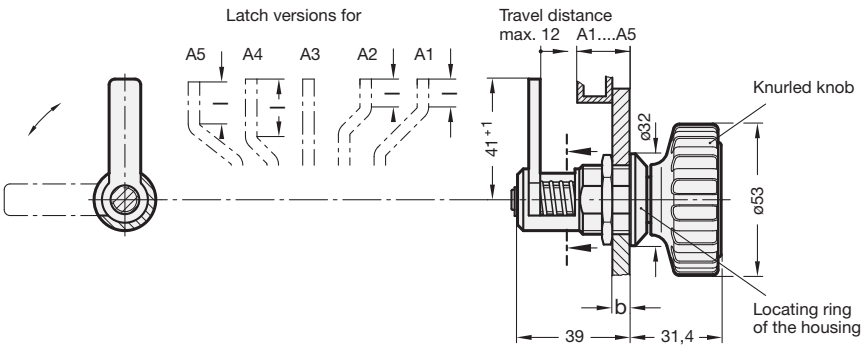

1 Form

RG Operation with knurled knob
VK7 Operation with square spindle A/F7
VK8 Operation with square spindle A/F8
DK Operation with triangular spindle (DK7)
SK6 Operation with hexagon SW6
VDE Operation with double bit

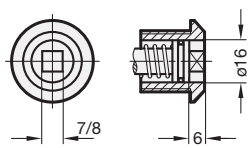

Type **VK7/VK8**

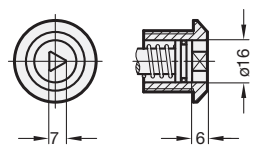

Type **DK**

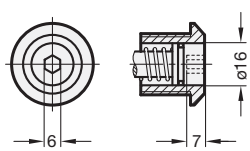

Type **SK6**

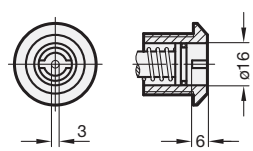

Type **VDE**

2

Clamping range **A1 ... A5** (Door + and frame thickness)									
A 1		A 2		A 3		A 4		A 5	
4 - 16		11 - 23		19 - 31		27 - 39		34 - 46	
b max.	**l** ≈	**b** max.	**l** ≈	**b** max.	**l** ≈	**b** max.	**l** ≈	**b** max.	**l** ≈
6	9,5	10	9,5	12	-	12	20	12	15

Specification

- Housing
  Zinc die casting
  black plastic coated
  black, RAL 9005, textured finish
- other parts
  Steel
  zinc plated, blue passivated
- Knurled knob (type RG)
  Plastic (Polyamide PA)
  - Handle black, matt
  - Cover cap light grey, matt
- *Plastic characteristics → Page 1141*
- RoHS compliant

Information

The outstanding feature of the rotary clamping latches GN 116.1 is their wide clamping range of 12 mm, with the 5 keys A1 to A5 covering a clamping range of 4 to 46 mm with broad overlap. This configuration allows large closing strokes within the individual key spacings, e.g. in connection with seals.

With the permissible tightening torque of 2 Nm for the clamping screw, the key generates a closing force of approx. 300 Nm at the key.

see also...
- *Rotary clamping latches GN 516 / GN 516.1 → Page 852 / 854*

Accessories

- Key GN 119.2 → *Page 870*
  (Zinc die casting, black plastic coated)
  - Key for triangle spindle GN 119.2-86-DK7-SW
  - Key for square spindle GN 119.2-86-VK7-SW / GN 119.2-86-VK8-SW
  - Key for double bit GN 119.2-86-VDE5-SW

How to order		
GN 116.1-VK7-A2 (1 = VK7, 2 = A2)	1	Form
	2	KB

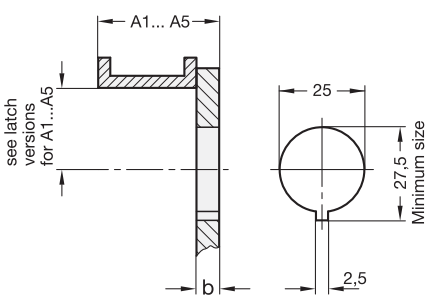

Construction and assembly instructions

By turning the latch clockwise, the key is first turned by 90° and so moved into the closing position.

When continuing to turn, the thread will move it in axial direction (max. 23 mm) and will finally clamp the door against the frame.

When opening by turning anti-clockwise, the key will move back and will release the door by a 90° turn.

The pressure spring generates the friction required for the 90° turn.

When mounting, the door is fitted with a bore hole as shown in the outline drawing opposite.

The interlock is pushed through the bore hole from the front, the hexagon nut can be pushed over the key from the back.
The mounting step is only possible if the key is located axially in the end position and approximately in the middle of the range of rotation.

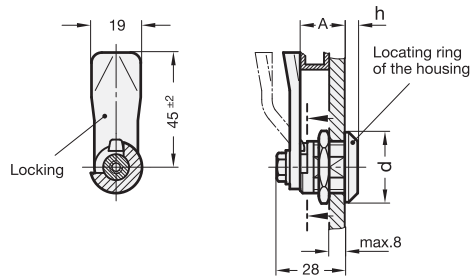

iF product design award

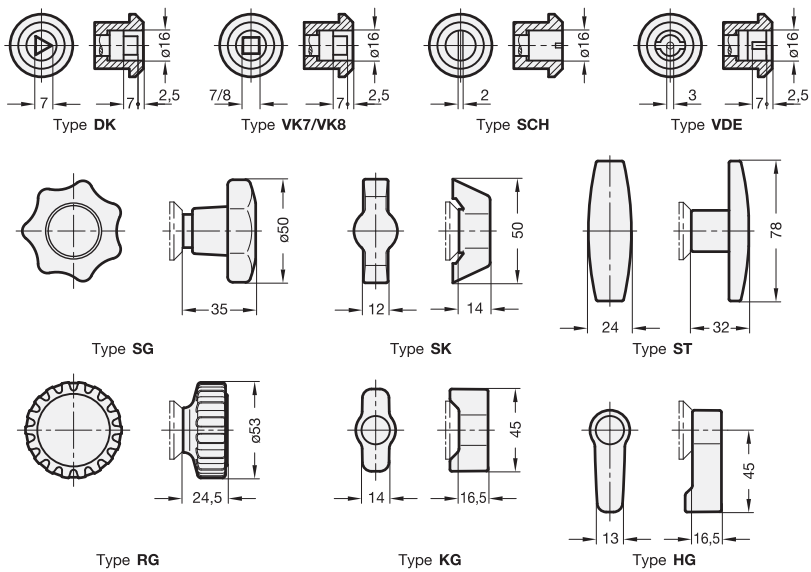

1 Type

	Operation
DK	with triangular spindle (DK7)
VK7	with square spindle A/F7
VK8	with square spindle A/F8
SCH	with slot
VDE	with double bit
SG	with star knob
SK	with wrench
ST	with T-Handle
RG	with knurled knob GN 7336
KG	with wrench
HG	with lever

2

Latch distance **A**											**d**		**h**	
											Type DK, VK7, VK8, VDE, SCH, SG, RG, KG, HG	Type SK, ST	Type DK, VK7, VK8, VDE, SCH, SG, RG, KG, HG	Type SK, ST
4	8	13	16	20	24	28	32	36	40	45	28	32	4	6
6	10	14	18	22	26	30	34	38	42	50	28	32	4	6

Specification

3

- Lock housing
  Zinc die casting
- Locating ring
  - chrome plated (Standard) —
  - plastic coated
    black, RAL 9005, textured finish ● **SW**
- All other parts
  Steel zinc plated, blue passivated
- Operation handles
  Plastic (Polyamide PA)
  - black, matt
- Cover cap (type RG, KG, HG)
  - light grey
- RoHS compliant

Information

Latches GN 115 lock by a turning operation limited to 90° which moves the locking behind the door frame. The bevels of the latch ease the closing of the door.

Latches with 22 different cranks cover a latch distance A from 4 to 50 mm.

Latches GN 115 are supplied with loosely enclosed locking.

see also...
• *Stainless Steel-Latches GN 115 → Page 862*

Latch, chrome plated locating ring 1 2 **GN 115-VK-20**	1	**Type**
	2	**Latch distance A**

Latch, black locating ring 1 2 3 **GN 115-SG-32-SW**	1	**Type**
	2	**Latch distance A**
	3	**Finish**

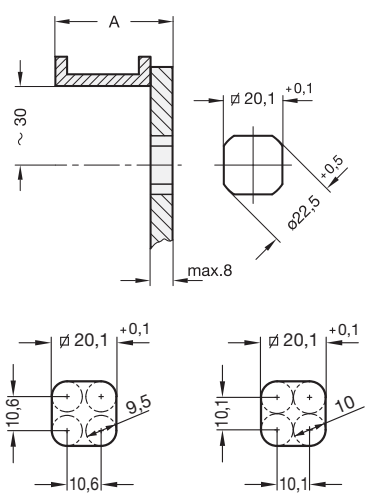

Construction and assembly instructions

For installation, set a bore diameter in the door as shown in the outline drawing opposite.

Once assembled, the latch is pushed through the bore diameter from the front. The hexagon nut can then be pushed over the latch from the back and bolted in place.

The installation bore diameter in the door leaf is usually generated by punching or laser machining in series production.

For small series and steel sheets below 2 mm thickness, the sheet metal punches GN 123 are the tool of choice → *Page 876.*

The installation bore diameter can also be set by drilling / milling as shown in the outline drawings opposite.

Accessories

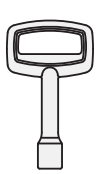

Keys GN 119.2 → *Page 870*
(Zinc die casting, black plastic coated)

Key for triangular spindle
GN 119.2-86-DK7-SW

Key for slot
GN 119.2-86-SCH-SW

Key for square spindle
GN 119.2-86-VK7-SW
GN 119.2-86-VK8-SW

Key for double bit (similar to DIN 43668)
GN 119.2-86-VDE5-SW

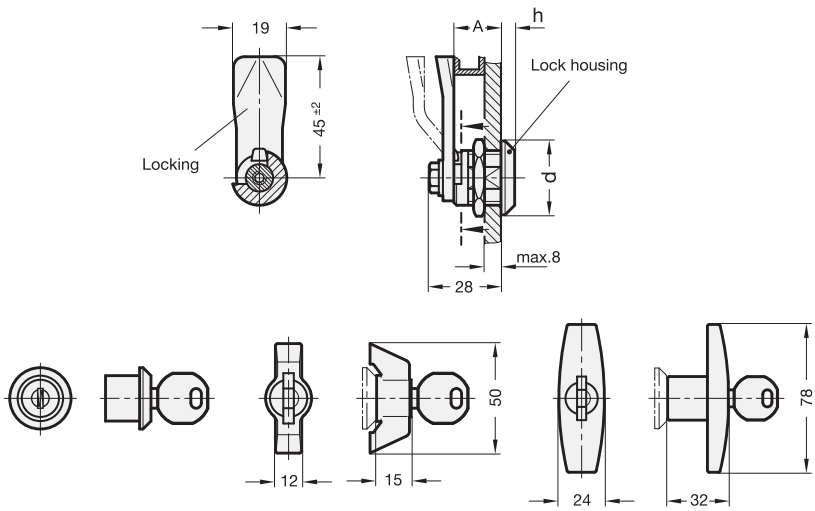

Type **SC/SU** Type **SCK/SUK** Type **SCT/SUT**

1 Type

SC	Operation with key (same lock)
SU	Operation with key (different lock)
SCK	Operation with wrench (same lock)
SUK	Operation with wrench (different lock)
SCT	Operation with T-Handle (same lock)
SUT	Operation with T-Handle (different lock)

2

Latch distance **A**											**d**		**h**	
											Type SC, SU	Type SCK, SUK, SCT, SUT	Type SC, SU	Type SCK, SUK, SCT, SUT
4	8	13	16	20	24	28	32	36	40	45	28	32	4	6
6	10	14	18	22	26	30	34	38	42	50	28	32	4	6

Specification

- Lock housing
  Zinc die casting
- Locating ring
  - chrome plated (standard)
  - plastic coated
    black, RAL 9005, textured finish ● **SW**
- All other parts
  Steel zinc plated, blue passivated
- Key
  Nickel silver with plastic hand piece
- Wrench / T-Handle
  Plastic (Polyamide PA)
  - black, matt
- *Plastic-characteristics → Page 1141*
- RoHS compliant

Information

The lockable latches GN 115 lock by a turning operation limited to 90° which moves the locking behind the door frame. The bevels of the locking ease the closing of the door.

Latches with 22 different cranks cover a range A from 4 to 50 mm.

Two keys are supplied. The key may be pulled off in both end positions.

Latches GN 115 are supplied with loosely enclosed locking.

see also...
- *Latches GN 115 (not lockable) → Page 858*
- *Mini-Latches GN 115.1 → Page 864*
- *Sheet metal punches GN 123 → Page 876*

Latch, chrome plated locating ring		
1 2	1	**Type**
GN 115-SC-42	2	**Latch distance A**

Latch, black locating ring		
1 2 3	1	**Type**
GN 115-SU-18-SW	2	**Latch distance A**
	3	**Finish**

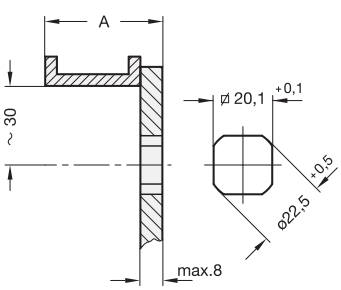

Construction and assembly instructions

For installation, set a bore diameter in the door as shown in the outline drawing opposite

Once assembled, the latch is pushed through the bore diameter from the front. The hexagon nut can then be pushed over the latch from the back and bolted in place.

The **installation bore diameter** in the door leaf is usually generated by punching or laser machining in series production.

For small series and steel sheets below 2 mm thickness, the sheet metal punches GN 123 are the tool of choice → *Page 876.*

The installation bore diameter can also be set by drilling / milling as shown in the outline drawings opposite.

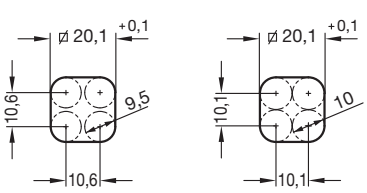

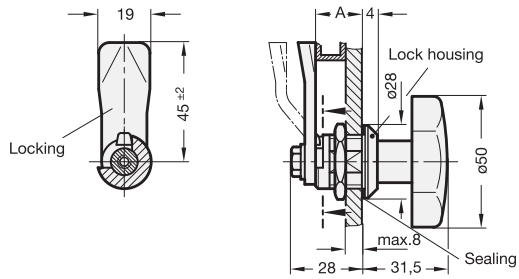

Inox Stainless Steel

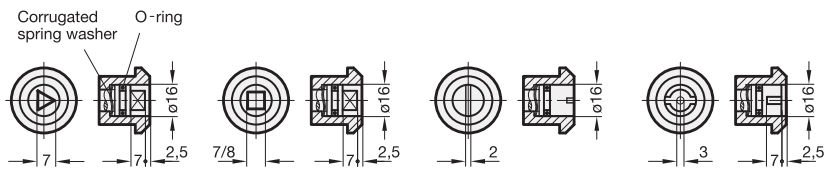

Type **DK** Type **VK7/VK8** Type **SCH** Type **VDE**

1	Type
SG	Operation with star knob
DK	Operation with triangular spindle (DK7)
VK7	Operation with square spindle A/F7
VK8	Operation with square spindle A/F8
SCH	Operation with slot
VDE	Operation with double bit

2

Latch distance **A**								
6	10	14	18	20	22	24	26	28

Specification

3

- Stainless Steel AISI 303 (Locking AISI 304) **NI**
- Stainless Steel-Star knob GN 5334 AISI 304
- Protection class IP 65
- *Stainless Steel characteristics* → *Page 1144*
- RoHS compliant

Accessories

- Keys 119.2 → *Page 870*

Information

Stainless Steel-Latches GN 115 lock by a turning operation limited to 90° which moves the locking behind the door frame. The bevels of the locking ease the closing of the door.

Latches with different cranks cover a range A from 6 to 28 mm.

The operating bolt is fitted with an O-ring for sealing.

Stainless Steel-Latches are supplied with loosely enclosed locking.

see also...

- *Construction and assembly instructions GN 115* → *Page 859*
- *Latches GN 115 (Steel zinc plated)* → *Page 858*
- *IP Protection classes* → *Page 1137*

How to order		
1 2 3	1	**Type**
GN 115-SG-18-NI	2	**Latch distance A**
	3	**Material**

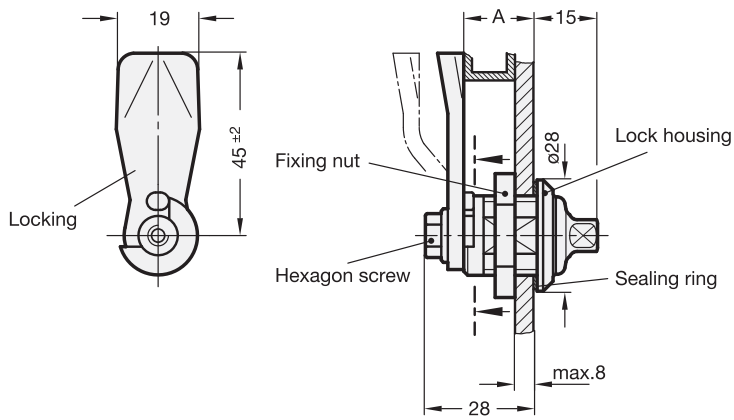

Rost frei — Inox Stainless Steel

1 Type

VH8 Operation with square spindle

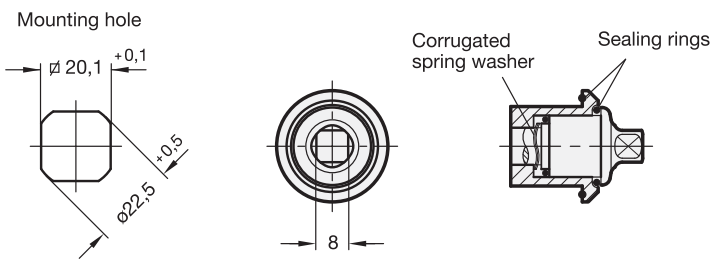

2

Latch distance **A**								
6	10	14	18	20	22	24	26	28

Specification

3

- Lock housing / external square Stainless Steel AISI 316Ti (A4) **NI**
- Locking Stainless Steel AISI 304 (A2)
- Hexagon screw Stainless Steel AISI 304 (A2)
- Fixing nut Stainless Steel AISI 304 (A2)
- *Stainless Steel characteristics → Page 1144*
- RoHS compliant

Accessory

- Keys 119.2 → *Page 870*

Information

Stainless Steel-Hygienic latches meet the requirements for a hygienic design according to DIN 1672-2 and DIN 14159.

The choice of 9 differently shaped catch plates gives a range A of 6 to 28 mm.

The lockings are included loose.

see also...

- *Keys GN 119.2 → Page 870*
- *Construction and mounting information GN 115 → Page 859*

How to order		
GN 115-VH8-20-NI (1 2 3)	1	**Type**
	2	**Latch distance A**
	3	**Material**

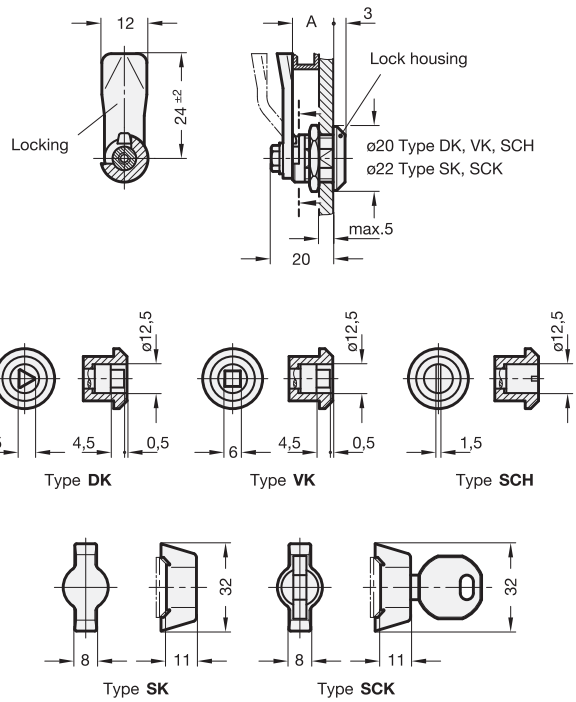

Rost frei — Inox Stainless Steel

1 Type

- **DK** Operation with triangular spindle (DK 6,5)
- **VK** Operation with square spindle (VK 6)
- **SCH** Operation with slot
- **SK** Operation with wrench (only GN 115.1)
- **SCK** Operation with wrench, lockable (only GN 115.1)

2

Latch distance **A**		
7,5	13,5	19,5

Specification

- **GN 115.1**
  - Lock housing
    Zinc die casting, chrome plated
  - All other parts
    Steel zinc plated, blue passivated
  - Wrench (Type SK and SCK)
    Zinc die casting
    plastic coated black, textured finish
  - Key
    Nickel silver with plastic hand piece
- **GN 115.6**
  - Stainless Steel AISI 303
  - Locking AISI 304
- Protection class IP65
  via the housing gasket and the O-ring
- RoHS compliant

Accessories

- Keys 119.2 → *Page 870*

Information

Mini-Latches GN 115.1 / GN 115.6 have smaller dimensions than latches GN 115.

They lock by a turning operation limited to 90° which moves the locking behind the door frame. The bevels of the locking ease the closing of the door.

Latches with different cranks allow a latch distance A in the range from 8, 14 and 20 mm.

The lockable latch (Type SCK) is supplied with two keys. The key may be pulled off in both end positions.

In their standard design, the latches have the same lock / the same key.

Mini-Latches GN 115.1 / GN 115.6 are supplied with loosely enclosed locking.

see also...
- *Sheet metal punches GN 123 → Page 876*
- *IP Protection classes → Page 1137*

Mini-Latch		
GN 115.1-SK-13,5 (1 = SK, 2 = 13,5)	1	**Type**
	2	**Latch distance A**

Stainless Steel-Mini-Latch		
GN 115.6-VK-19,5 (1 = VK, 2 = 19,5)	1	**Type**
	2	**Latch distance A**

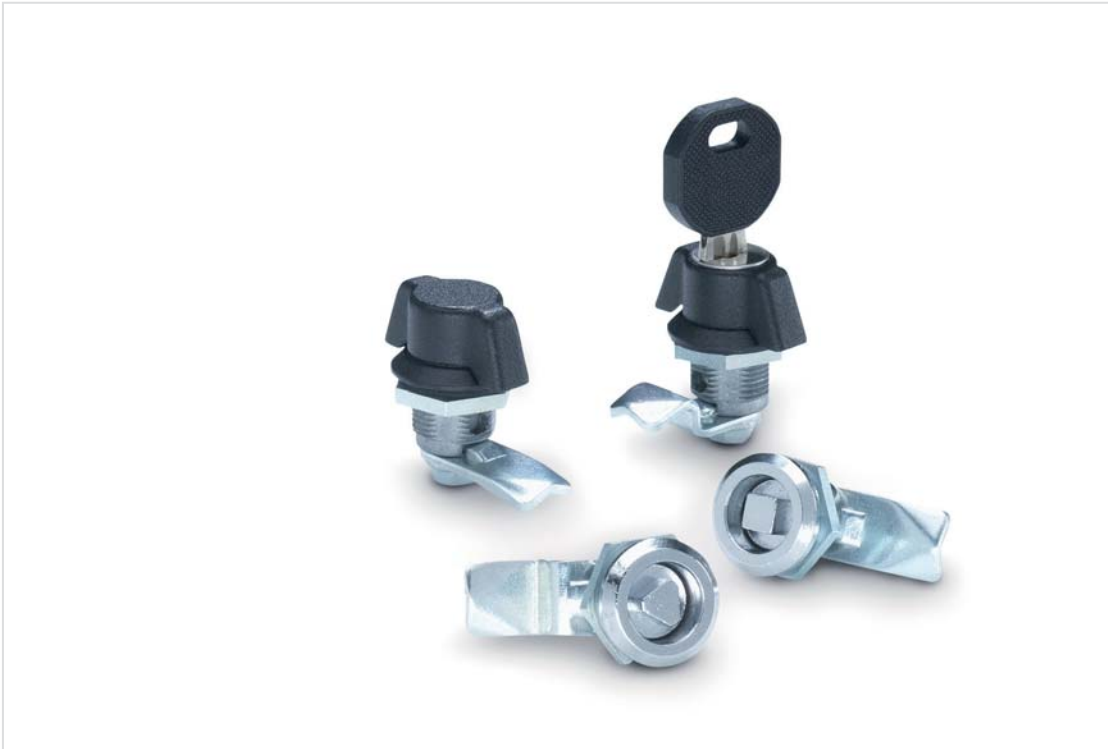

Construction and assembly instructions

For installation, set a bore diameter in the door as shown in the outline drawing opposite.

Once assembled, the latch is pushed through the bore diameter from the front. The hexagon nut can then be pushed over the latch from the back and bolted in place.

The **installation bore diameter** in the door leaf is usually generated by punching or laser machining in series production.

For small series and steel sheets below 2 mm thickness, the sheet metal punches GN 123 are the tool of choice → *Page 876.*

The installation bore diameter can also be set by drilling / milling as shown in the outline drawings opposite.

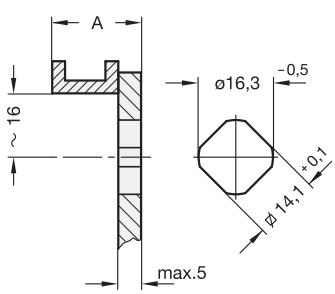

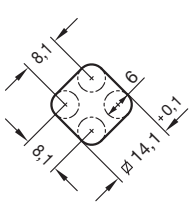

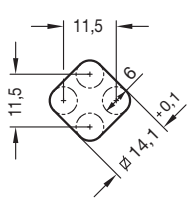

Latches with „U“ handle

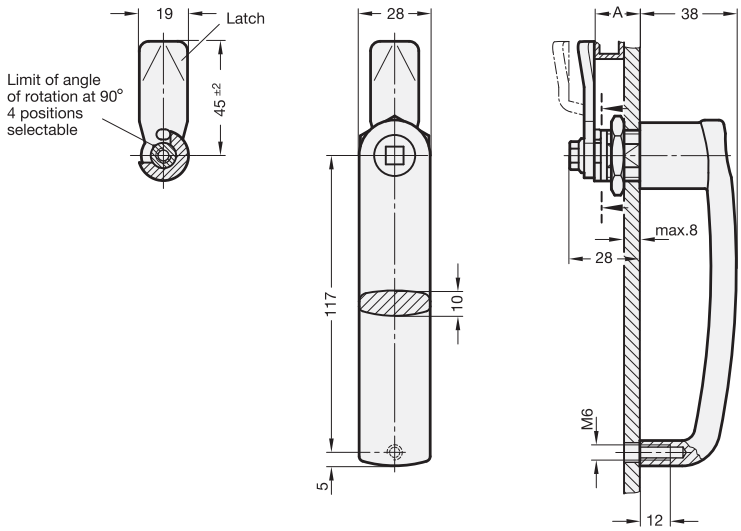

1 **Type**

DK	Operation with triangular spindle (DK7)
VK7	Operation with square spindle A/F7
VK8	Operation with square spindle A/F8
SCH	Operation with slot
VDE	Operation with double bit

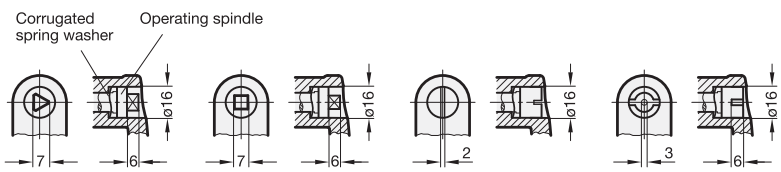

Type **DK** Type **VK7/VK8** Type **SCH** Type **VDE**

2

Latch distance **A**																					
4	6	8	10	13	14	16	18	20	22	24	26	28	30	32	34	36	38	40	42	45	50

Specification

3

- “U“ handle
  Zinc die casting
- plastic coated
  black, RAL 9005, textured finish ● **SW**
  silver, RAL 9006, textured finish ● **SR**
- other parts
  Steel
  zinc plated, blue passivated
- RoHS compliant

Accessory

- Keys 119.2 → *Page 870*

Information

Latches with cabinet „U“ handles GN 115.7 are used when the application requires both a locking mechanism and a handle.

A rotary movement limited to 90°, e.g. of the triangular spindle of type DK, shifts the key-bolt behind the door frame, with the bevelled key-bolt making the door closing action easier.

The choice of 22 differently shaped catch plates gives a range A of 4 to 50 mm.

Latches GN 115.7 are supplied with loosely enclosed lock.

How to order		
GN 115.7-SCH-20-SR (1 = SCH, 2 = 20, 3 = SR)	1	**Type**
	2	**Latch distance A**
	3	**Finish**

Technical and assembly instructions

Depending on the installation situation, the 90° rotary movement range of the latch can be defined by memans of a plug-type element which can be mounted in 4 different positions.

This allows the latch with „U“ handle to be used in any attachment position and regardless of the turning and locking direction or of the narrow side of the door. Subsequent repositioning of the 90° rotary range is possible.

The drawing below shows the plugging options and the resulting 90° rotary ranges.

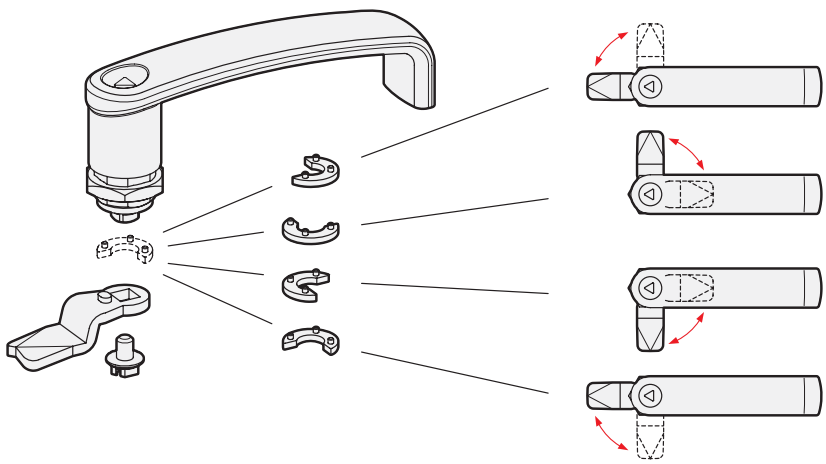

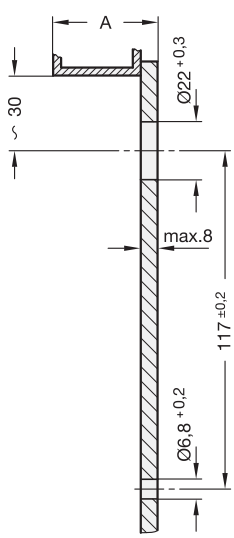

For mounting, the door is fitted with two bore holes as shown in the outline drawing opposite, attached at a distance of 30 mm from the door frame.

The spigot (M22x1.5) also has 4 surfaces, with the effect that the „U“ handle can also be used with the standard borehole of the latches GN 115 → *Page 858.*

The locking enclosure with the preassembled operating bolt is pushed through from the front and fixed in place with the hexagonal nut. The distance sleeve and the door locking bar is then plugged on at the back and fixed in place with the hexagonal screw.

Protective caps

for latches GN 115, GN 115.1, GN 115.6, GN 119

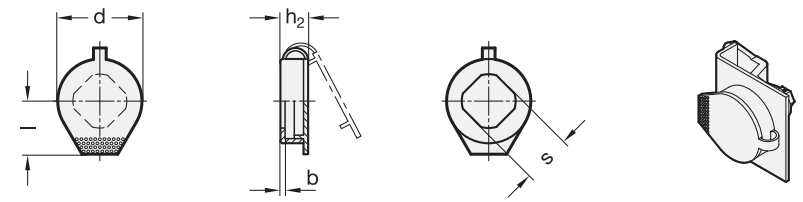

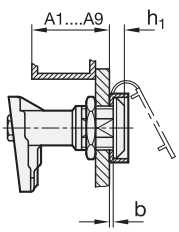

Latches
GN 119

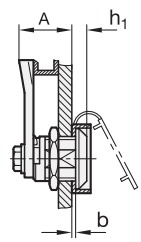

Latches
GN 115, GN 115.1, GN 115.6

Please note: The clamping range A 1 ... A 7 and/or the latch distance A is reduced by the dimension „b“.

1 d	2 s	b	h_1	h_2	Length l	for latches
29	14,5	2	6	11	18,5	GN 115.1 / GN 115.6
36	20,5	2	8	12	23	GN 115 / GN 119

Specification

- Plastic (Polyethylene)
  - black
- RoHS compliant

Information

Protective caps GN 120 are usable for the following latches:

- *Latches GN 115 → Page 858*
- *Mini-Latches GN 115.1 → Page 864*
- *Stainless Steel-Mini-Latches GN 115.6 → Page 864*
- *Latches GN 119 → Page 848*

How to order		
GN 120-36-20,5 (1 = 36, 2 = 20,5)	1	d
	2	s

Opening handles

for locks GN 115, GN 119 / snap locks GN 315.1

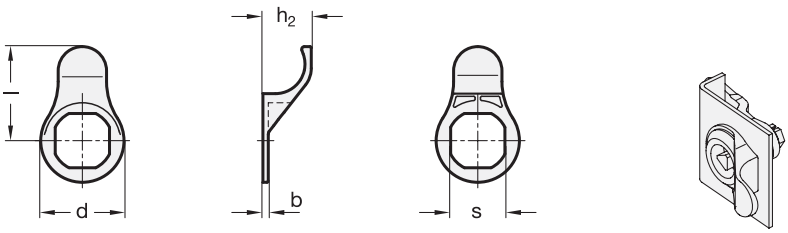

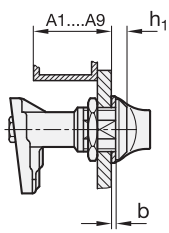

Door locks
GN 119

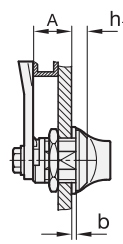

Locks
GN 115

Please note: The latch distance A1 ... A9 and/or the locking distance A is reduced by the dimension „b“.

1

d	s	b	h_1	h_2	Length l	for locks / snap locks
31	20,5	2	6	18	35	GN 115 Type DK, VK7, VK8, VDE, SC
35	20,5	2	8	18	36	GN 119 Type DK, VK7, VK8, VDE / GN 315.1

Specification

- Plastic (Polyamide PA)
  black, matt
- RoHS compliant

Information

Opening handles GN 320 are suitable for following door locks:

- *Locks GN 115 → Page 858*
- *Stainless Steel-Locks GN 115 → Page 862*
- *Locks GN 115 (lockable) → Page 860*
- *Door locks GN 119 → Page 848*
- *Stainless Steel-Door locks GN 119 → Page 850*
- *Snap locks GN 315.1 → Page 874*

How to order		
1 GN 320-31	1	d

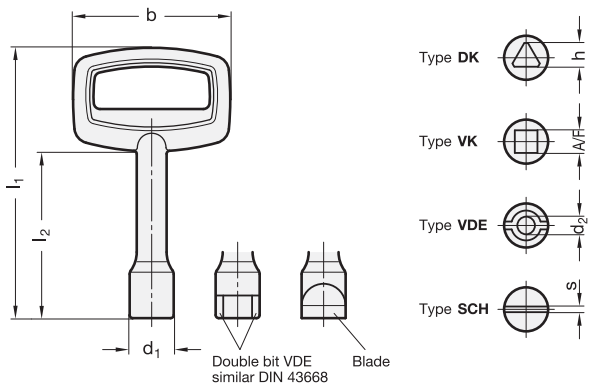

2	Type
DK6,5	Operation with triangle h = 6,5
DK7	Operation with triangle h = 7
VK6	Operation with square A/F6
VK7	Operation with square A/F7
VK8	Operation with square A/F8
VDE5	Operation with double bit d_2 = 5,6
SCH	Operation with blade / slot

1

l_1	l_2	b	d_1	d_2	s	Type					for latches
55	34	32	11,4	-	1,3	DK6,5	VK6	SCH	-		GN 115.1 / GN 115.6
86	53	50	14	5,6	1,8	DK7	VK7	VK8	VDE5	SCH	GN 115 / GN 116.1 / GN 119 / GN 516 / GN 516.1

Specification

3

- Zinc die casting
  plastic coated
  black, textured finish ● SW
- RoHS compliant

Information

Keys GN 119.2 are suitable for following latches:

- *Latches GN 115 → Page 858*
- *Stainless Steel-Latches GN 115 → Page 862*
- *Mini-Latches GN 115.1 → Page 864*
- *Stainless Steel-Mini-Latches GN 115.6 → Page 864*
- *Rotary clamping latches GN 116.1 → Page 856*
- *Latches GN 119 → Page 848*
- *Stainless Steel-Latches GN 119 → Page 850*
- *Rotary clamping latches GN 516 → Page 852*
- *Rotary clamping latches GN 516.1 → Page 854*

How to order		
1 2 3	1	l_1
119.2-86-VK8-SW	2	Type
	3	Finish

Stop locks

with 4 indexing positions (90°)

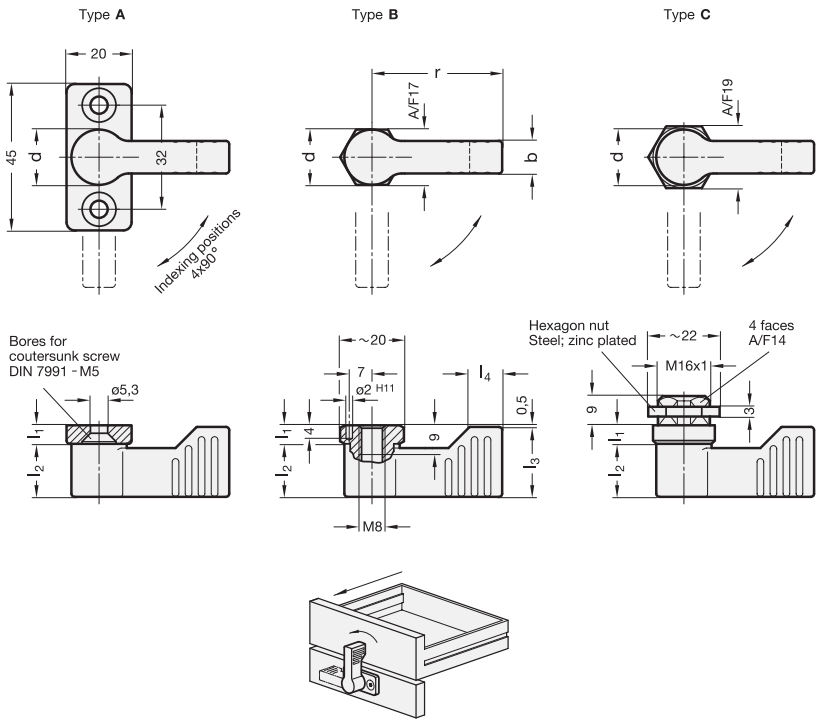

3 Type

- **A** with flange for surface mounting
- **B** with female thread
- **C** with male thread

1 d	2 r	b	l_1 ≈	l_2	l_3 min.	l_4
17	40	10	5,5	16,5	21,5	11

Specification

4

- Latch
  Zinc die casting
  plastic coated
  black, RAL 9005, textured finish ● SW
  red, RAL 3000, textured finish ● RS
- Indexing mechanism
  - Type A / Type B
    Steel / Plastic
    Steel parts zinc plated, blue passivated
  - Type C
    Zinc die casting / Plastic
- Fastening flange
  Zinc die casting
  plastic coated
  black, matt
- RoHS compliant

Information

Stop locks GN 702 type C have the same connecting dimensions as the mini locks GN 115.1. The mounting bores are to be selected and asset accordingly.

In standard production, the **mounting bore holes** are usually made by punching or with laser.

The sheet metal punch GN 123 → *Page 876* is recommended for small series and sheet metal with a thickness of below 2 mm.

The mounting bore holes can also be made by drilling / milling.

Mounting holes

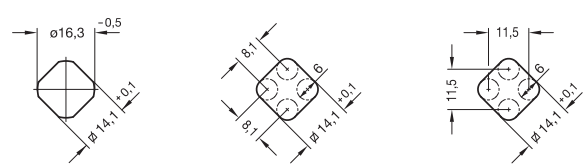

How to order		
1 2 3 4	1	d
GN 702-17-40-C-SW	2	r
	3	Type
	4	Colour

Snap locks

Locking distance A1 / A2 adjustable

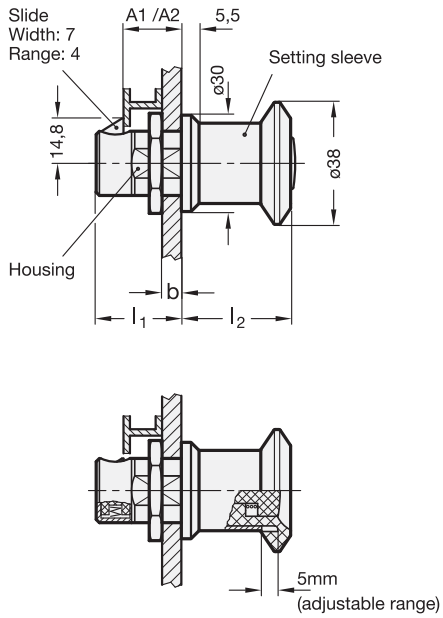

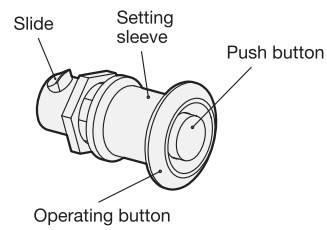

1

Locking distance **A1** continuously adjustable	**b** max. door thickness	l_1	l_2
18 (min.)	10,5	26,5	34
23 (max.)	15,5	31,5	29

Locking distance **A2** continuously adjustable	**b** max. door thickness	l_1	l_2
23 (min.)	15,5	31,5	34
28 (max.)	20,5	36,5	29

Specification

- Housing
  Zinc die casting
  - corrosion-resistant
    ZNDG Pass. nano®-coating
  - anthracite coloured
- Setting sleeve
  Steel
  - plastic coated black,
    matt textured finish
- Operating button / slide
  Plastic (Polyamide PA)
  - black, matt finish
- Push button
  Plastic (Polyamide PA)
  - light grey
- Hexagon nut
  Steel zinc plated, blue passivated
- *Plastic characteristics → Page 1141*
- RoHS compliant

Information

Snap locks GN 315 are characterised by a radial, spring-loaded slide causing the locking action.

When closing the door, the locking action sets in automatically. The bevelled slide is first pushed back via an appropriately arranged lug and then moved into the locking position by the pressure spring.

The door is unlocked via the push button.

To operate the door, these snap locks are fitted with an operating button.

see also...
- *Snap locks GN 315.1 (without operating button) → Page 874*

How to order		
1 GN 315-A1	1	**Locking distance**

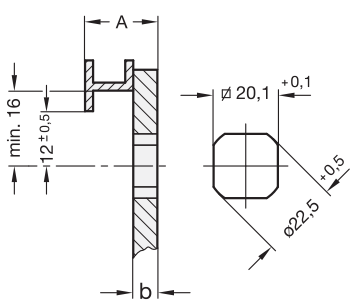

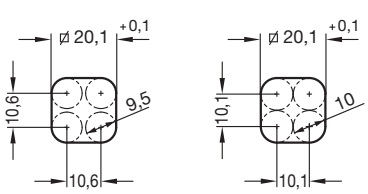

Construction and assembly instruction

These snap locks can be used to latch a door, but not to clamp it.

This is why it is important to position the locking distance A (door + frame width) with great accuracy and precision.

For snap locks GN 315, the locking distance can be set continuously via the setting sleeve adjustable via a precision thread. This makes installation a great deal easier.

For installation, set a bore diameter in the door as shown in the outline drawing opposite.

The snap lock is pushed through the bore diameter from the front and mounted from the back with a hexagon nut.

The **installation bore diameter** in the door leaf is usually generated by punching or laser machining in series production.

For small series and steel sheets below 2 mm thickness, the sheet metal punches GN 123 are the tool of choice → *Page 876.*

The installation bore diameter can also be set by drilling / milling as shown in the outline drawings opposite.

Snap locks

two locking distance A

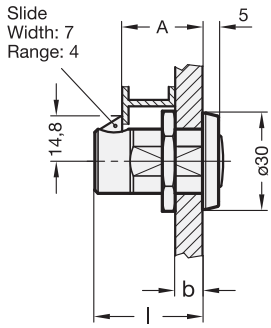

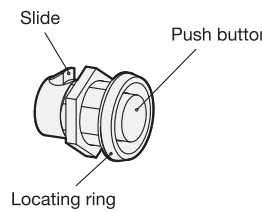

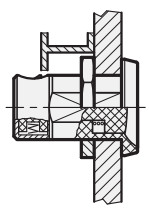

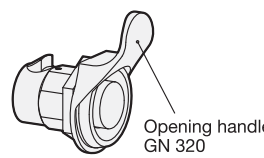

1

Locking distance **A**	**b** max. door thickness	Length **l**
20	12	28,5
25	17	33,5

Specification

- Housing
  Zinc die casting
  - corrosion-resistant
    ZNDG Pass. nano®-coating
  - anthracite coloured
- Locating ring
  - additionally plastic coated
    black, matt textured finish
- Slide
  Plastic (Polyamide PA)
  - black
- Push button
  Plastic (Polyamide PA)
  - light grey
- Hexagon nut
  Steel zinc plated, blue passivated
- *Plastic characteristics → Page 1141*
- RoHS compliant

Information

Snap locks GN 315.1 are characterised by a radial, spring-loaded slide causing the locking action.

When closing the door, the locking action sets in automatically. The bevelled slide is first pushed back via an appropriately arranged lug and then moved into the locking position by the pressure spring.

The door is unlocked via the push button.

If no operating element is needed to operate the door or if such element is arranged separately, GN 315.1 snap locks are used.

see also...

- *Snap locks GN 315*
  (adjustable, with operating button) → Page 872
- *Opening handles GN 320 → Page 869*

How to order		
1 GN 315.1-25	1	**Locking distance A**

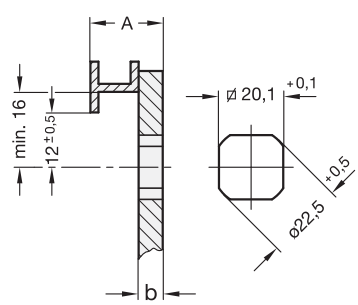

Construction and assembly instructions

These snap locks can be used to latch a door, but not to clamp it.

This is why it is important to position the locking distance A (door + frame width) with great accuracy and precision.

For installation, set a bore diameter in the door as shown in the outline drawing opposite.

The snap lock is pushed through the bore diameter from the front and mounted from the back with a hexagon nut.

The installation bore diameter in the door leaf is usually generated by punching or laser machining in series production.

For small series and steel sheets below 2 mm thickness, the sheet metal punches GN 123 are the tool of choice ➔ *Page 876.*

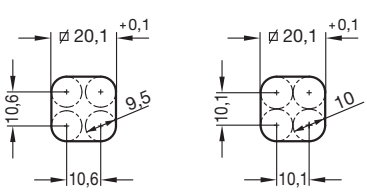

The installation bore diameter can also be set by drilling / milling as shown in the outline drawings opposite.

Sheet metal punches

for mounting latches

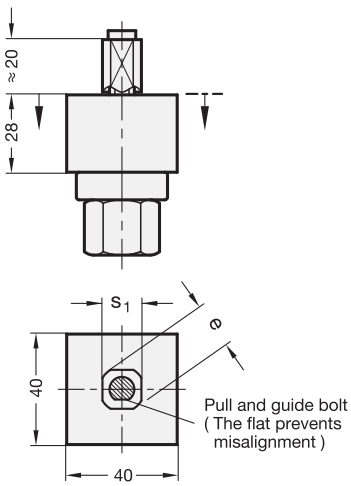

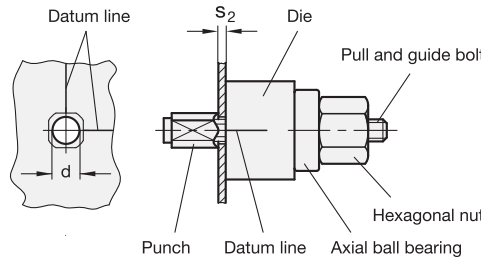

s_1 +0,1 Square	e Ø +0,5	d Pilot drilling	s_2 max. sheet metal thickness
V 14,1	16,3	11	2
V 20,1	22,5	15	2

Specification

- Steel
- Punch and die hardened (56 - 58 HRC)
- RoHS compliant

On request

- Sheet metal punches GN 123.5 for Stainless Steel sheet

Information

These sheet metal punches GN 123 allow the operator to punch in a simple way fixing holes in sheet metal doors for latches of the types GN 115, GN 115.1 and GN 119.

Sheet metal punches GN 123 are ideally suited for punching holes into sheet metal up to 2mm thickness.

Assembly instruction

Set predrill hole **d**. We recommend using an adhesive tape with the centre of the punch hole and the datum lines showing.

Insert pull bolt with punch.

Attach the die, align along the datum lines and fix in place with the hexagon nut / set punch hole.

How to order		
GN 123-V14,1	1	s_1

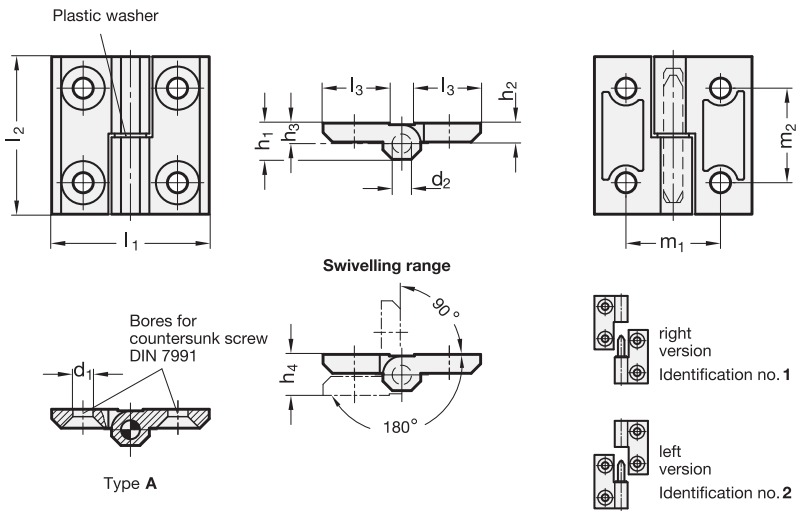

Rost frei — Inox Stainless Steel

4 Type

A 2x2 bores
for countersunk screws

5 Identification no.

1 fixed bearing (pin) right
2 fixed bearing (pin) left

2 l_1	3 l_2	d_1	d_2	h_1	h_2	h_3	h_4 +0,5	l_3	m_1	m_2
40	40	5,3	4	9	5	5,5	11	16	25	25
50	50	6,4	6	11,5	6	6,5	13	21	30	30
60	60	8,3	8	15	8	8,5	17	26	36	36

Specification

	1	6
• Zinc die casting	ZD	
plastic coated		
black RAL 9005, textured finish		● SW
silver RAL 9006, textured finish		● SR
• Stainless Steel AISI CF-8		NI
- matt shot-blasted		GS

• Pin
Stainless Steel AISI 303

• *Stainless Steel characteristics → Page 1144*
• *Load rating information → Page 1156*
• RoHS compliant

Information

see also...
• *Hinges (not detachable) GN 237 → Page 878*

How to order

GN 337-ZD-40-40-A- 1 -SR (1 2 3 4 5 6)

1	Material
2	l_1
3	l_2
4	Type
5	Identification no.
6	Finish

Hinges

Zinc die casting / Stainless Steel / Aluminium

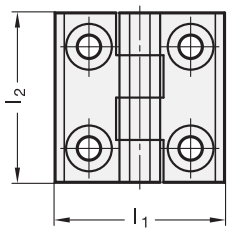

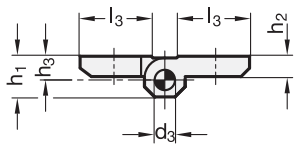

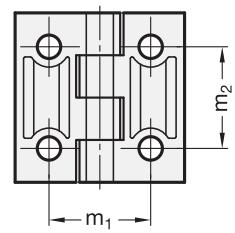

Swivelling range

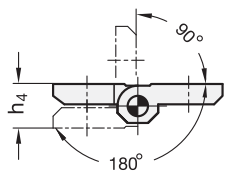

Bores for countersunk screw DIN 7991

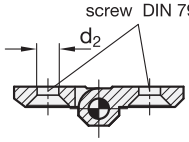

Type **A**

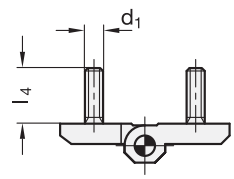

Type **C**

Inox Stainless Steel

4 Form

A 2x2 bores for countersunk screws

C 2x2 threaded studs

2 l_1	3 l_2	Material Type A				Type C		d_1	d_2	d_3	h_1	h_2	h_3	h_4 +0,5	l_3	l_4 ZD	l_4 NI	m_1	m_2
30	30	ZD	NI	A4	AL	-	-	-	4,3	3	7,5	4	4,5	8,5	10,7	-	-	18	18
40	40	ZD	NI	A4	AL	ZD	NI	M 5	5,3	4	9	5	5,5	11	16	12	11	25	25
50	50	ZD	NI	A4	AL	ZD	NI	M 6	6,4	6	11,5	6	6,5	13	21	12	13	30	30
60	60	ZD	NI	A4	AL	ZD	NI	M 8	8,3	8	15	8	8,5	17	26	14	17	36	36

Specification

	1	5
• Zinc die casting	ZD	
plastic coated		
black, RAL 9005, textured finish		● SW
silver, RAL 9006, textured finish		● SR
• Stainless Steel		
- AISI CF-8	NI	
- AISI 316	A4	
- matt blasted		GS
• Aluminium	AL	
anodized, natural colour		● EL

- Pin
  - Stainless Steel AISI 303 (A2) for ZD
  - Stainless Steel AISI 316Ti (A4) for AL, NI and A4
- Threaded stud (Type C)
  - Stainless Steel AISI 316 for ZD and AL
  - Stainless Steel AISI CF-8 for NI, casted „in one piece“
- *Stainless Steel characteristics → Page 1144*
- *Load rating information → Page 1156*
- RoHS compliant

Information

see also...

- *Hinges GN 337 (detachable) → Page 877*
- *Hinges GN 238 (adjustable) → Page 880*

Hinge

1 2 3 4 5
GN 237-ZD-60-60-A-SR

1	Material
2	l_1
3	l_2
4	Type
5	Finish

Stainless Steel-Hinge

1 2 3 4 5
GN 237- NI -40-40-C- GS

1	Material
2	l_1
3	l_2
4	Type
5	Finish

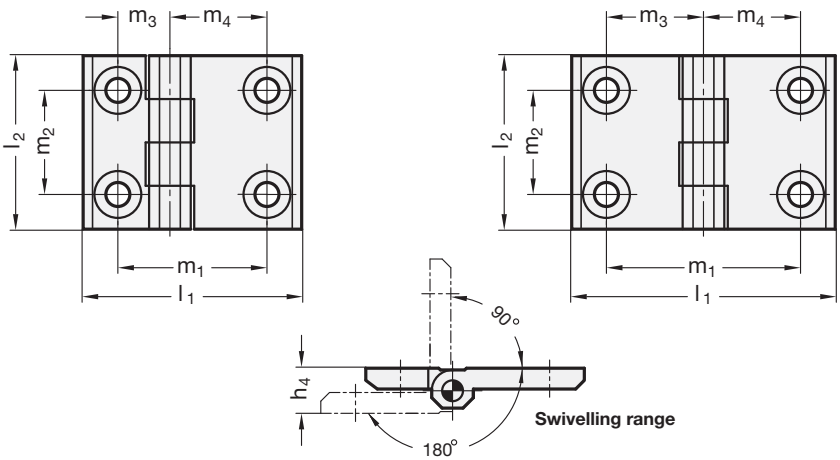

Inox
Stainless
Steel

4 Form

A 2x2 bores
for countersunk screws

C 2x2 threaded studs

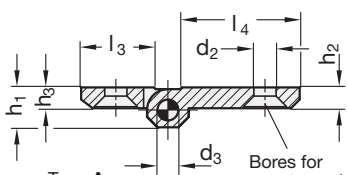

Type **A**

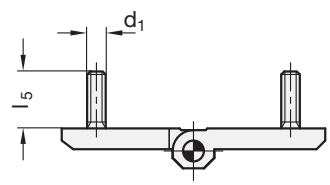

Type **C**

2 l_1 extended on one side	l_1 extended on both side	3 l_2	d_1	d_2	d_3	h_1	h_2	h_3	h_4 +0,5	l_3	l_4	l_5	m_1	m_2	m_3	m_4
63	-	50	M 6	6,3	6	11,5	6	6,5	13	21	34	12	43	30	15	28
-	76	50	M 6	6,3	6	11,5	6	6,5	13	34	34	12	56	30	28	28
90	-	60	M 8	8,4	8	15	8	8,5	17	26	56	14	63	36	18	45
-	120	60	M 8	8,4	8	15	8	8,5	17	56	56	14	90	36	45	45

Specification

	1	5
• Zinc die casting	ZD	
platsic coated		
black, RAL 9005, textured finish		● SW
silver, RAL 9006, textured finish		● SR
• Stainless Steel (only type A)		
- AISI CF-8	NI	
- matt shot blasted		GS

• Pin
- Stainless Steel AISI 303 (A2) for ZD
- Stainless Steel AISI 316Ti (A4) for NI

• Threaded stud (type C)
Stainless Steel AISI 316

• *Stainless Steel characteristics* → *Page 1144*

• *Load rating information* → *Page 1156*

• RoHS compliant

Information

Hinges GN 237 with extended hinge wings are made in a compact and sturdy design. They are used when larger spacings are required for the attachment bore holes.

How to order

1 2 3 4 5
GN 237-ZD-76-50-A-SR

1	**Material**
2	**l_1**
3	**l_2**
4	**Type**
5	**Finish**

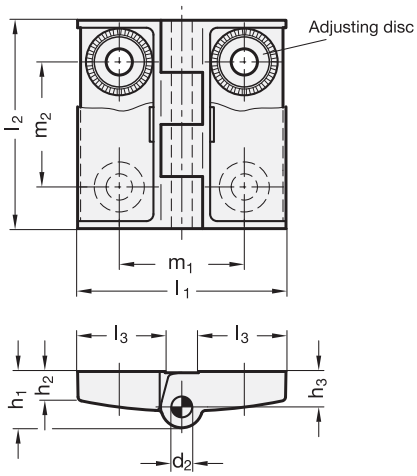

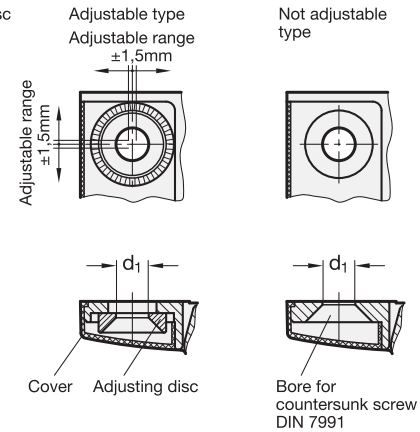

3 Type

BJ adjustable on both sides
EJ one-sided adjustable
NJ not adjustable

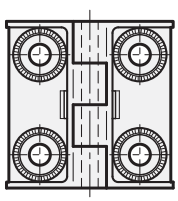

Type **BJ**

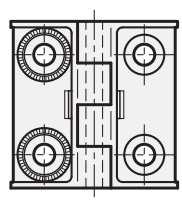

Type **EJ**

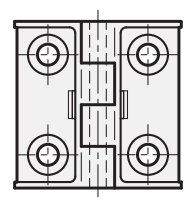

Type **NJ**

1 l_1	2 l_2	d_1	d_2	h_1≈	h_2≈	h_3	l_3	m_1	m_2
42	42	5,3	4	11	6,5	7,5	17	25	25
50	50	6,3	5	13,5	7	8,5	21	30	30
60	60	6,3	6	16,5	8,5	11	26	36	36

Specification

4

- Zinc die casting
  - plastic coated
    black, RAL 9005, textured finish ● **SW**
    silver, RAL 9006, textured finish ● **SR**
- Adjusting disc
  Steel, hardened
- Cover
  Plastic
  - black grey for type SW
  - light grey for type SR
- Pin
  Stainless Steel AISI 303
- *Load rating information → Page 1156*
- RoHS compliant

Information

The adjustable hinges GN 238 allow the technically and visually perfect positioning and alignment of doors in their frames.

The steel adjusting disc has a cutting ring in its underside which cuts into the radial fins of the zinc die-cast wings when the countersunk screw is tightened, virtually creating a form-lock that prevents adjusting the hinge after mounting.

The covers conceal the fixing elements and lend the hinge an attractive optical appearance.

see also...
- *Hinges GN 127 (adjustable, Zinc die casting) → Page 883*

How to order

1 2 3 4
GN 238-50-50-BJ-SW

1	l_1
2	l_2
3	Type
4	Colour

Swivelling range

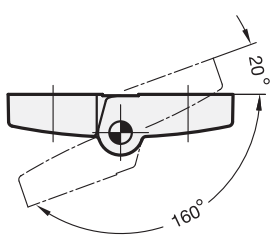

Function (Type BJ)

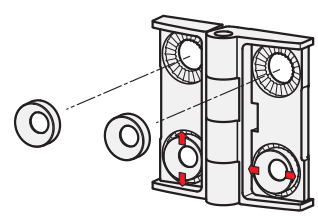

Assembly instruction

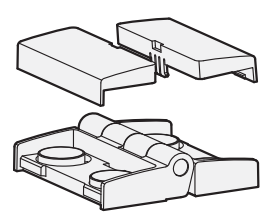

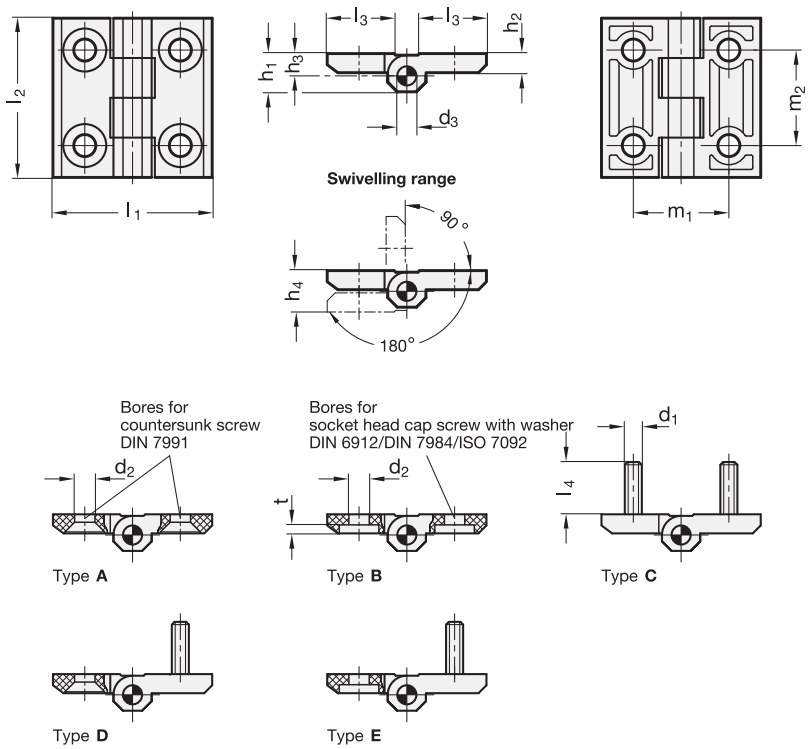

ELESA original design CFM.

CLEAN

3 Type

- **A** 2x2 bores for countersunk screws
- **B** 2x2 bores for socket head cap screws
- **C** 2x2 threaded studs
- **D** 2x bores for countersunk screws / 2x threaded studs
- **E** 2x bores for socket head cap screws / 2x threaded studs

1 l_1	2 l_2	d_1	d_2	d_3	h_1	h_2	h_3	h_4 ≈	l_3	l_4	m_1 ±0,2	m_2 ±0,2	t
30*	30	-	4,5	2,5	7	3,5	4	8	10,5	-	18	18	1,3
40	40	M 5	5,5	4	9	5	5,5	11	14	12	25	25	1,7
50	50	M 6	6,5	6	11,5	6	6,5	14	18	12	30	30	3
60	60	M 8	8,5	8	15	8	8,5	18	21	14,5	36	36	3,7

* Size 30 only available in type A and B.

Specification

4

- Plastic (Polyamide PA) —
  - glass fibre reinforced
  - temperature resistant up to 140 °C

  black, matt

  white, RAL 9002 CL
  Cleanline, shiny finish
  (only type A)
- Pin
  Stainless Steel AISI 303
- Threaded studs
  Steel, nickel plated
- *Load rating information → Page 1155*
- *Plastic characteristics → Page 1141*
- RoHS compliant

Hinge, black		
1 2 3	1	l_1
GN 237.1-40-40-C	2	l_2
	3	Type

Hinge, Cleanline		
1 2 3 4	1	l_1
GN 237.1-50-50-A-CL	2	l_2
	3	Type
	4	Cleanline

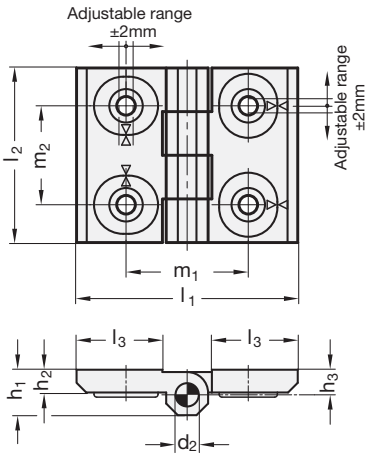

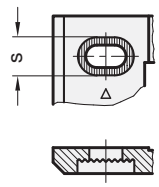

Adjusting bush

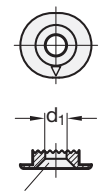

Bore for countersunk screw
DIN 7991-M6

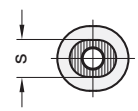

3 Type

- **H** horizontal adjustable
- **B** vertical adjustable
- **HB** vertical and/or horizontal adjustable

Swivelling range

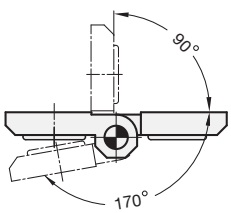

Function

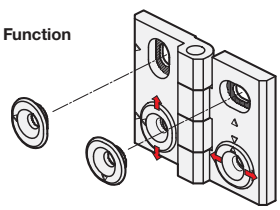

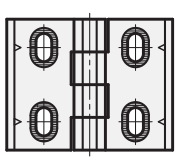

Type **H**

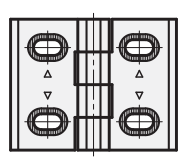

Type **B**

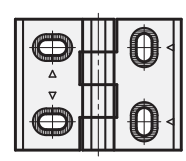

Type **HB**

1 l_1	2 l_2	d_1	d_2	h_1 ≈	h_2	h_3	l_3	m_1	m_2	s
76	60	6,5	8	15	8	8,5	30	42	34	12

Specification

- Zinc die casting
  plastic coated
  black, textured finish
- Pin
  Stainless Steel AISI 303
- *Stainless Steel characteristics → Page 1144*
- *Load rating information → Page 1156*
- RoHS compliant

Information

Hinges GN 127 allow the technically and visually perfect positioning and alignment of a door in its frame.

The serrations at the wings of the hinge and at the adjusting bushes create a form lock which prevents the hinge from moving after installation. The tips of the arrows mark the 0 reference point for easier installation.

see also...

- *Hinges GN 238 (adjustable, Zinc die casting) → Page 880*

How to order		
1 2 3	1	l_1
GN 127-76-60-HB	2	l_2
	3	Type

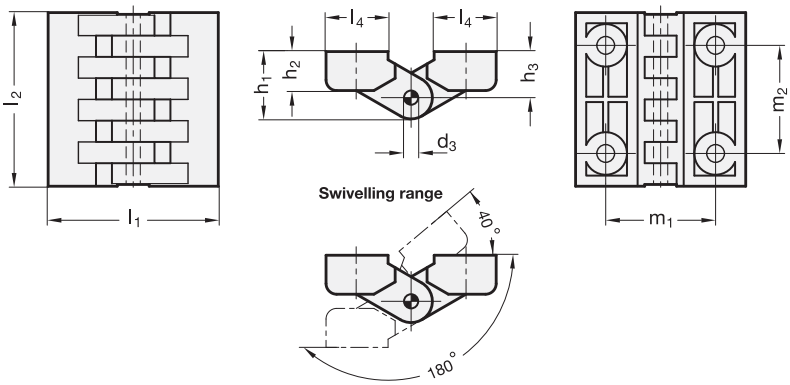

ELESA original design CFA.

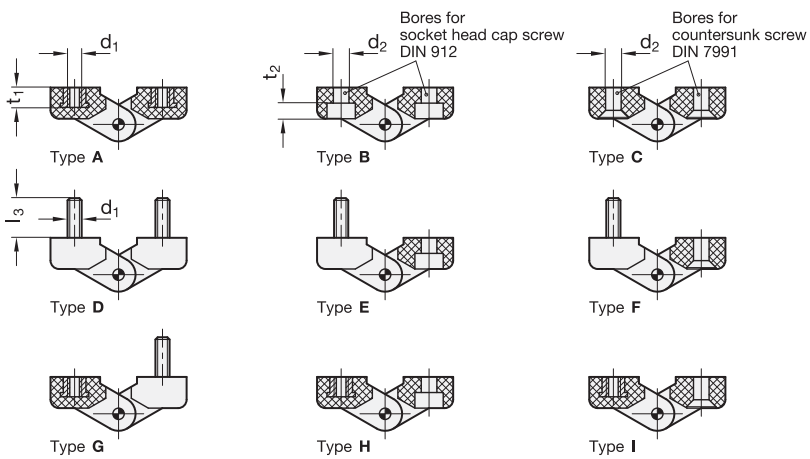

3 Type

- **A** 2x2 threaded blind bores
- **B** 2x2 bores for socket head cap screws
- **C** 2x2 bores for countersunk screws
- **D** 2x2 threaded studs
- **E** 2x threaded studs
  2x bores for socket head cap screw
- **F** 2x threaded studs
  2x bores for countersunk screws
- **G** 2x threaded blind bores
  2x threaded studs
- **H** 2x threaded blind bores
  2x bores for socket head cap screws
- **I** 2x threaded blind bores
  2x bores for countersunk screws

1 l_1	2 l_2	d_1	d_2	d_3	h_1	h_2	h_3	l_3	l_4	m_1 ±0,25	m_2 ±0,25	t_1	t_2
39*	40	M 4	4,3	3	14	9	9,5	-	14	25	25,5	6,5	4,5
48	49	M 5	5,5	4	19	11	13	14	17	31	30,5	7	5,5
64	65	M 6	6,5	5	23	13,5	15	18	24	40	40	10	6,5
98	98	M 10	10,5	8	35	20,5	23	20	35	63	60	15	10,5

* Size 39 only available in types A, B and C

Specification

- Plastic (Polyamide PA)
  - black, matt
  - temperature resistant up to 80 °C
- Pin
  Stainless Steel AISI 303
- Threaded bushes Brass, nickel plated
- Threaded studs Brass, nickel plated
- *Plastic characteristics → Page 1141*
- *Stainless Steel characteristics → Page 1144*
- *Load rating information → Page 1154*
- RoHS compliant

How to order
1 2 3
GN 151-48-49-B

1	l_1
2	l_2
3	Type

Sheet metal hinges

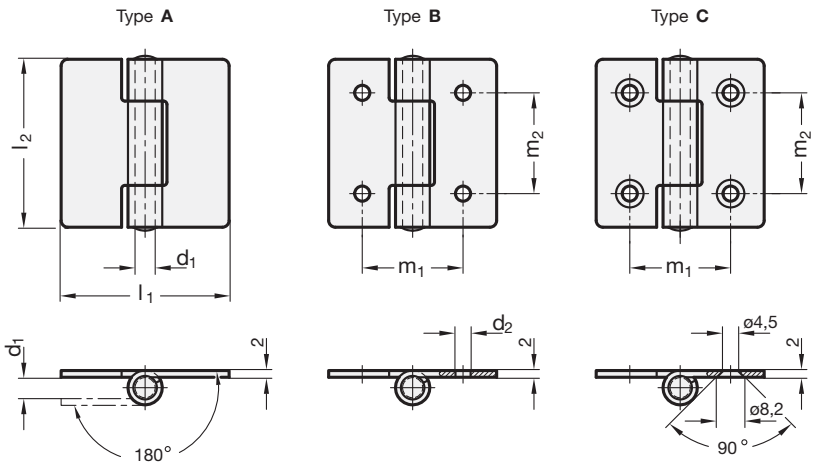

Boreholes for countersunk screw thread - ø4 to ø4,5
Adapt the thread countersunk, if required.

Rost frei — Inox Stainless Steel

4 Type

- **A** without bores, for welding
- **B** with bores for cylinder head screws / lens head screws
- **C** with bore for countersunk screws

2 l_1	3 l_2	d_1	d_2	m_1	m_2
40	40	4	4,2	25	25
50	50	6	5,2	30	30
60	60	6	5,2	36	36

Specification

1

- Steel **ST**
  - zinc plated, blue passivated
  - only type B and C
- Stainless Steel 304 **NI**
- Pin
  Stainless Steel AISI 304
- *Stainless Steel characteristics → Page 1144*
- RoHS compliant

Information

Sheet metal hinges GN 136 are low-cost designs for low-load applications.

How to order		
1 2 3 4	1	**Material**
GN 136-NI-40-40-A	2	l_1
	3	l_2
	4	**Type**

Hinges

Accessory for profile systems

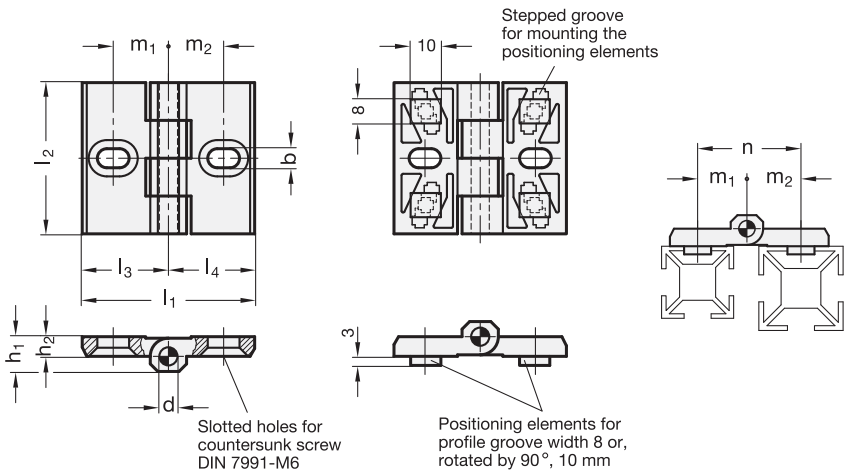

1

l_1	b	d	h_1	h_2	l_2	l_3	l_4
57	6,3	6	12	6,5	50	28,5	28,5
68	6,3	6	12	6,5	50	28,5	40
80	6,3	6	12	6,5	50	40	40

Specification

- Zinc die casting
  plastic coated
  black, textured finish
- Pin
  Stainless Steel AISI 303
- *Load rating information → Page 1156*
- RoHS compliant

Information

Hinges GN 161 have been designed for commercially available profile rails.

With three different types of hinges only, 66 different groove distances ‚n' can be accommodated. To achieve this the positioning elements are set in specially marked recesses in the hinge wings.

The rectangular (8x10 mm) positioning elements, two pieces per hinge wing, will prevent a misalignment. They will also carry the weight of the door.

For screwing the hinges onto the profile rails, special T-Nuts are used.

see also...

- *T-nuts for profile systems → Page 567*

How to order		
1 GN 161-68	1	l_1

GN 161-57 n Groove distance	m_1	m_2	GN 161-68 n Groove distance	m_1	m_2	GN 161-80 n Groove distance	m_1	m_2
33	16,5	16,5	37,5	16,5	21	42	21	21
34	16,5	17,5	38	16,5	21,5	42,5	21	21,5
35	16,5	18,5	39	16,5	22,5	43,5	21	22,5
35,5	16,5	19	40	16,5	23,5	44,5	21	23,5
36,5	16,5	20	42,5	16,5	26	47	21	26
35	17,5	17,5	44	16,5	27,5	48,5	21	27,5
36	17,5	18,5	47,5	16,5	31	52	21	31
36,5	17,5	19	38,5	17,5	21	43	21,5	21,5
37,5	17,5	20	39	17,5	21,5	44	21,5	22,5
37	18,5	18,5	40	17,5	22,5	45	21,5	23,5
37,5	18,5	19	41	17,5	23,5	47,5	21,5	26
38,5	18,5	20	43,5	17,5	26	49	21,5	27,5
38	19	19	45	17,5	27,5	52,5	21,5	31
39	19	20	48,5	17,5	31	45	22,5	22,5
40	20	20	39,5	18,5	21	46	22,5	23,5
-	-	-	40	18,5	21,5	48,5	22,5	26
-	-	-	41	18,5	22,5	50	22,5	27,5
-	-	-	42	18,5	23,5		22,5	31
-	-	-	44,5	18,5	26	47	23,5	23,5
-	-	-	46	18,5	27,5	49,5	23,5	26
-	-	-	49,5	18,5	31	51	23,5	27,5
-	-	-	40	19	21	54,5	23,5	31
-	-	-	40,5	19	21,5	52	26	26
-	-	-	41,5	19	22,5	53,5	26	27,5
-	-	-	42,5	19	23,5	57	26	31
-	-	-	45	19	26	55	27,5	27,5
-	-	-	46,5	19	27,5	58,5	27,5	31
-	-	-	50	19	31	62	31	31
-	-	-	41	20	21	-	-	-
-	-	-	41,5	20	21,5	-	-	-
-	-	-	43,5	20	23,5	-	-	-
-	-	-	46	20	26	-	-	-
-	-	-	47,5	20	27,5	-	-	-
-	-	-	51	20	31	-	-	-

Swivelling range

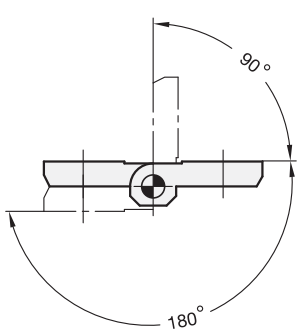

Assembly instruction and application example

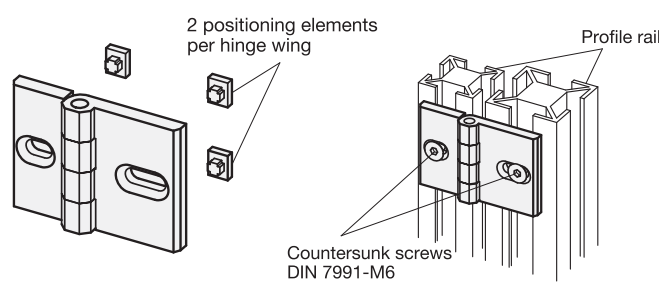

GN 139.1 with switch | GN 139.2 without switch

Hinges with safety switch

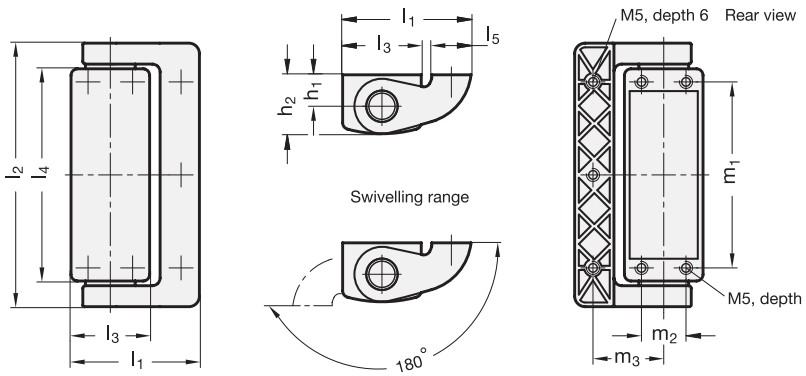

3 Type

- **A** Connector plug at the top
- **B** Connector plug from the bottom
- **C** Connector plug on the backside, with 0,2 m cable

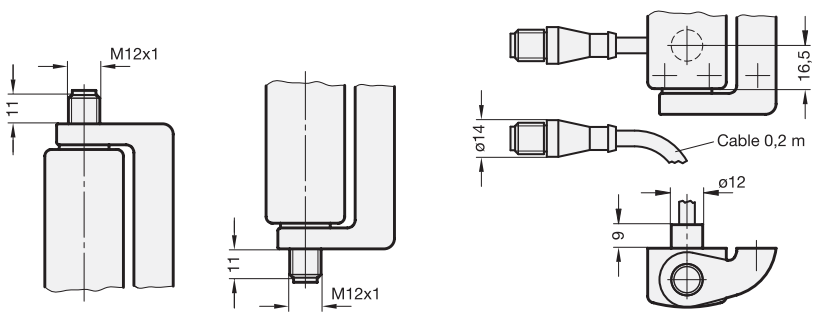

Type **A** Type **B** Type **C**

1 l_1 small hinge wing	1 l_1 broad hinge wing	2 l_2	l_3	l_4	l_5 small hinge wing	l_5 broad hinge wing	h_1	h_2	m_1	m_2	m_3 small hinge wing	m_3 broad hinge wing
49	79	101	30	81	15	30	12	22,5	71	17	27	50

Specification

- Zinc die casting
  plastic coated
  silver metallic
- Pin
  Stainless Steel AISI 303
- RoHS compliant

Accessories

- Cable with connection coupling
  8-pin, 5 and/or 10 meter long:
  - GN 330-M12x1-8-G-5
  - GN 330-M12x1-8-G-10
- Mounting plates GN 139.3 / GN 139.4

On request

- Hinges with operation angle > 0°
- Hinges with other contact terminations

Information

Hinges GN 139.1 with integrated safety switches have been designed for monitoring doors and covers of machines and plants. Opening the door will activate the switch contacts which, in turn, will then e.g. interrupt a protective circuit via break contact (NC) and at the same time signal the door opening by closing a normally open contact element (NO). The contact blocks are fitted with positive opening slow-action contacts, i.e. they will definitely be separated when activated and have no hysteresis. The angle at which the switching points are reached are adjustable (see contact travel diagram).

Together with the integrated contact blocks, the hinges are a compact, easy to mount unit with an attractive design. The mounting from the back make the hinge more tamper-proof.
Hinges **GN 139.2** without switching function act as additional hinges e.g. for larger doors or gates where several hinges are required.

Hinge with safety switch		
1 2 3	1	l_1
GN 139.1-49-101-A	2	l_2
	3	**Type**

Hinge without safety switch		
1 2	1	l_1
GN 139.2-79-101	2	l_2

Mechanical features

Maximum load Information with safety factor Examples of calculation → *see operating instruction*		L_A 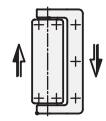	L_{R0} 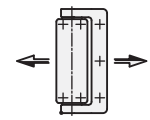	L_{R90}
	I_1 = 49	1500 N	1000 N	1000 N
	I_1 = 79	750 N	500 N	500 N
Fixing	from the back, 7 x threads M5, 6 mm deep			
Recommended torque	5 Nm (Screws M5)			
Protection class	IP67 (Type A / B, connector on the housing) IP69K (Type C with connector cable)		acc. to EN 60529	
Switching principle, contact opening	Slow-action contacts force-fitted, with positive opening		acc. to IEC 60947-5-1, K	
Contact material	Silver alloy			
Operating travel diagram (scheme)	The switching points are adjustable up to 4° in direction of 0°. *see operating instruction*	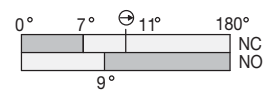		
Maximum operating frequency	1200 / hour		acc. to IEC 60947-5-1	
Mechanical life span	10^6 operating cycles		acc. to IEC 60947-5-1	
Actuating speed	min. 2° / second, max. 90° / second			

Electrical features / Safety features

Utilization category	DC 13: 24 Vdc / 2 A (with connector plug) AC 15: 24 Vac / 2 A	acc. to EN 60947-5-1
Contact termination 8-pole connector M12 **Pin and cable assignment**	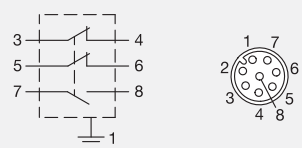	
Type of cable	Type N 7 x0,5 mm², jacket PVC H05VV-F	acc. to IEC 60332-1-2 et seqq.
Short-circuit current	1000 A	acc. to EN 60947-5-1
Rated insulation voltage	30 V AC / 36 V DC	
Short-circuit protection	2 A, 500 V, Type gG	
Ambient temperature	- 25 °C up to + 80 °C	
Degree of pollution, external	3	acc. to EN 60947-5-1
Mission time (T_M)	20 years	acc. to EN ISO 13849-1
Number of cycles (B10 d)	5 000 000	acc. to EN 61820-2

Approvals, Conformities, Applicability

Low-voltage switchgear and controlgear CE declaration IMQ: CA02.03746 UL: E 131787	CE IMQ c UL us	EN 60947-1/2007 EN 60947-1-5 : 2004 + A1/2009
Safety applications	up to SIL 3 / PL e	acc. to EN ISO 13849-1

Other important details and hints are given in the operating instructions for GN 139.1 hinges which are included with every hinge and which are also available as PDF downloads from „www.ganter-griff.com“ under ‚Service‘.

The hinges with safety switch must be mounted and commissioned by qualified technical personnel in compliance with the details given in the operating instructions and with the national and international rules and regulations and the applicable standards. Otto Ganter GmbH & Co. KG will assume no statutory liability for missing or incorrect information and for any consequences arising therefrom.

Cables with connector coupling M12x1

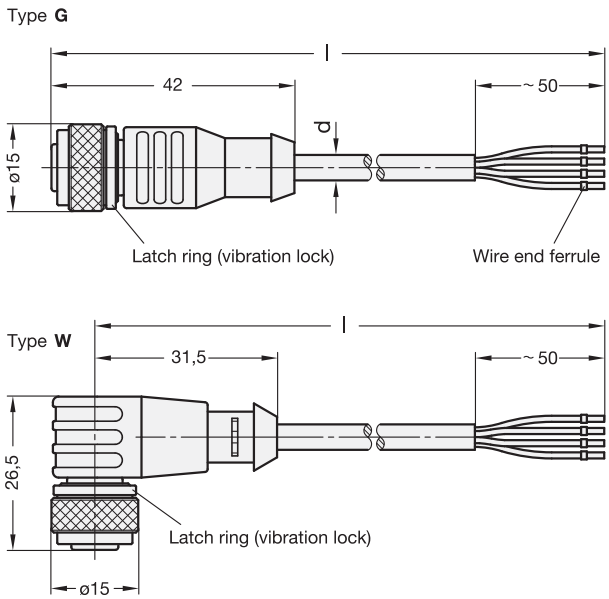

3 Type

G Connector coupling straight

W Connector coupling 90° angled

1 Connector	2 Number of contacts (poles)			4 Length **l** in meter (cable length)	
	Type G	Type G Type W	Type G Type W		
M 12 x 1	4	8	12	5	10

Specification

- Handle (Housing)
  Plastic
  Polyurethan-Elastomer TPU
- Cable (Outer sheath)
  Polyurethan PUR
  black
- Temperature resistance: -40 °C ... +90 °C
- Insulating resistance: > 10^9 Ω
- Degree of polution: 3 / 2
  according to EN 60664-1
- Protection class: IP67
  (in screwed condition)
  according to EN 60529
- Connecting nut M12x1
  Brass, nickel plated
- RoHS compliant

On request

- other cable length l

Information

Cables with connector coupling M12x1 GN 330 are used in conjunction with standard elements which have an electric switching function.

see also...

- *Tubular handles GN 331 → Page 100*
- *Tubular handles GN 332 → → Page 106*
- *Hinges with safety switch GN 139.1 → Page 888*

How to order

1 2 3 4

GN 330-M12x1-12-G-5

1	Connector
2	Number of contacts
3	Type
4	Cable length l

Cable with plug-in connector	d Outside diameter	Cross-section	Operating voltage acc. to IEC 60 664-1	Current load rating acc. to IEC 60512-3	Contact assignment
4-pole (4-wire)	5	4 x 0,34 mm²	max. 250 V	4 A	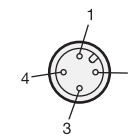 1 brown 3 blue 2 white 4 black
8-pole (8-wire)	6	8 x 0,25 mm²	max. 30 V	2 A	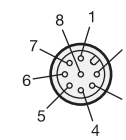 1 white 5 grey 2 brown 6 pink 3 green 7 blue 4 yellow 8 red
12-pole (12-wire)	6	12 x 0,14 mm²	max. 30 V	1,5 A	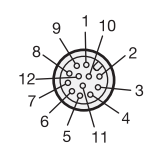 1 brown 5 pink 9 red 2 blue 6 yellow 10 purple 3 white 7 black 11 grey/pink 4 green 8 grey 12 red/blue

Other cable properties

This adaptable cable, suitable for drag chains, features and outer jacket made of PUR and a core insulation made of polypropylene. It is free of PVC, silicon and halogens. UL and CSA approvals are available.

The cable is also resistant to oil, chemicals, hydrolysis, microbes and welding sparks and flame retardant under IEC 60332-2-2 which makes the cable the perfect choice in many applications.

Mounting plates

for hinges with safety switch GN 139.1 / GN 139.2

GN 139.3

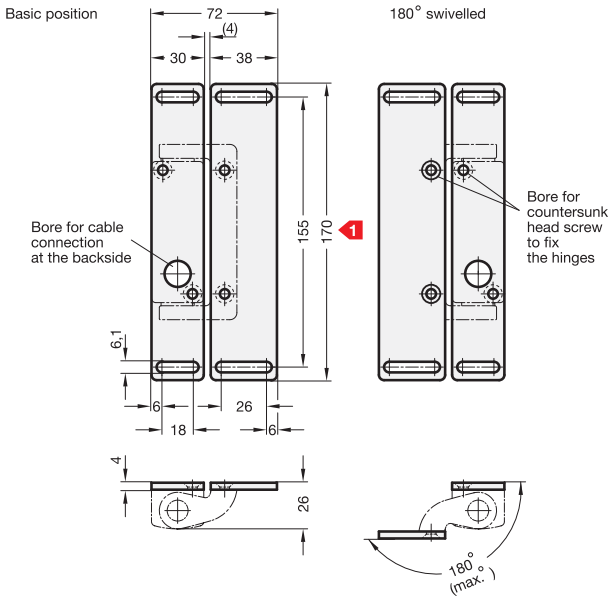

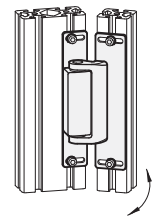

Mounting plate, flat
1
GN 139.3-170

GN 139.4

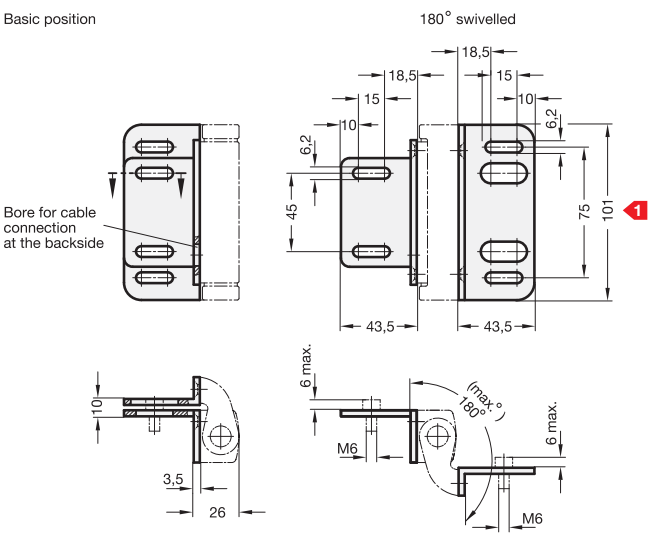

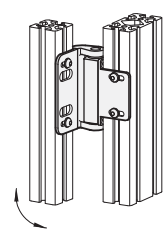

Mounting plate, angled
1
GN 139.4-101

Specification

- **GN 139.3**
  Steel
  zinc plated and plastic coated
  silver metallic
- **GN 139.4**
  Zinc die casting
  plastic coated
  silber metallic
- RoHS compliant

Information

The flat mounting plate GN 139.3 allows the hinges GN 139.1 / GN 139.2 to be attached from the front.

The angled mounting plate GN 139.4 allows the hinges GN 139.1 / GN 139.2 to be attached between frame and door, i.e. the door gap.

The long slotted holes allow also allow the attachment to profile systems.

Countersunk screws for fixing the hinges to the mounting plate are included part of the order.

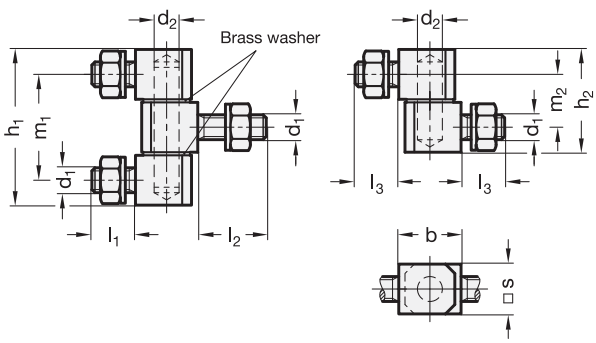

Installation example

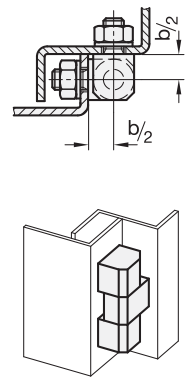

2 Type

D consisting of three parts
Z consisting of two parts

1

s Square	b	d_1	d_2 Pin	h_1	h_2	l_1	l_2	l_3	m_1	m_2
12	15	M 6	6	39,2	25,6	10	14	10	27,2	13,6
16	20	M 8	8	49	32,5	14	22	14	33	16,5

Specification

- Steel zinc plated, blue passivated
- Pin
  Brass, nickel plated
- Washer
  Brass, nickel plated
- Hexagon nut ISO 4032
  Steel zinc plated, blue passivated
- Serrated washer DIN 6797
  for securing screws
  zinc plated, blue passivated
- RoHS compliant

Information

Hinges GN 129 are used for hatch type doors. The two part hinge allows the door to be unhinged.

How to order		
GN 129-16-D (1 2)	1	s
	2	Type

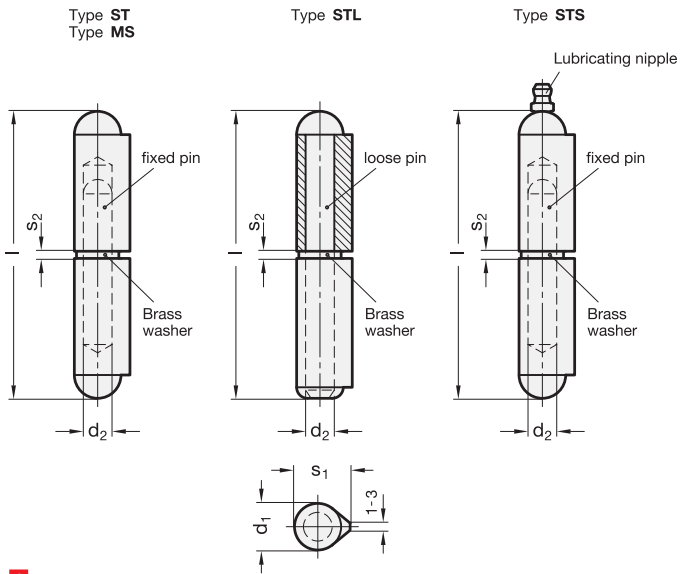

Installation example

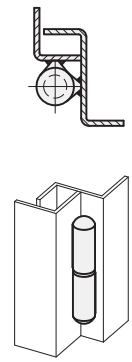

2 Type

ST with fixed Steel pin
MS with fixed Brass pin
STL with loose Steel pin
STS with fixed Steel pin and lubricating nipple

1

Length l Type ST Type MS	 Type STL Type STS	d_1	d_2 Pin	s_1	s_2
40	-	8	5	10	2
50	-	8	5	10	2
60	-	10	6	12	2
80	80	13	8	15,5	2
100	100	16	10	20	3
120	120	16	11	20	3
135	135	18	12	23	3
150	150	20	13	25,5	3
180	180	20	14	25,5	3
200	200	23	16	28,5	3

Specification

- Steel, blank
- Pin
  - Type ST / STS / STL
    Steel, blank
  - Type MS
    Brass, turned, blank
- Washer
  Brass
- Lubricating nipple DIN 71412-D
  Steel, zinc plated
- RoHS compliant

Information

Hinges GN 128 are produced from drawn weldable profiled steel extrusions.

Types ST, STS and MS feature a hinge pin fixed in the lower half of hinge. Type STL with loose steel pin allows the easy installation when attaching several hinges in parallel or if the door is very heavy.

The upper half of Type STS hinge has an additional lubricating nipple DIN 71412-D which allows the hinges to be lubricated without dismantling the hinges.

How to order 1 2 GN 128-80-ST		
	1	Length l
	2	Type

Version **NI / AL**

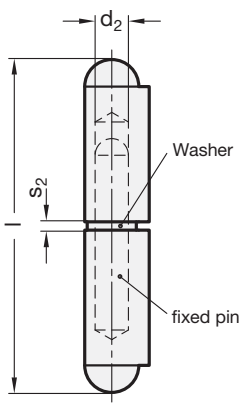

Version **A4**

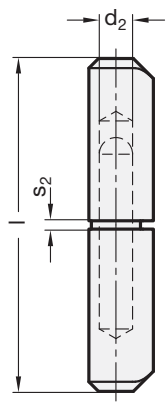

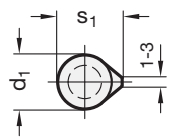

Example of installation

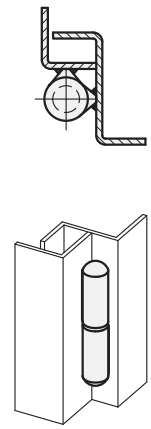

Rost frei — Inox Stainless Steel

Length **l** Material NI Material AL	Material A4	d_1	d_2 Pin	s_1	s_2
60	-	10	6	12	2
80	80	13	8	15,5	2
100	100	16	10	20	3
120	120	16	11	20	3
150	-	20	13	25,5	3
180	-	20	14	25,5	3

Specification

- Stainless Steel
  - AISI 304 **NI**
  - AISI 316 **A4**
- Aluminium **AL**
  - weldable, 3.3206
  - Pin / Washer
    Stainless Steel AISI 304
- *Stainless Steel characteristics* → *Page 1144*
- RoHS compliant

Information

Hinges GN 128.2 are produced from drawn weldable profiled Stainless Steel or Aluminuim extrusions.

The pin is fixed in the lower half.

How to order		
GN 128.2-80-A4	1	**Length l**
	2	**Material**

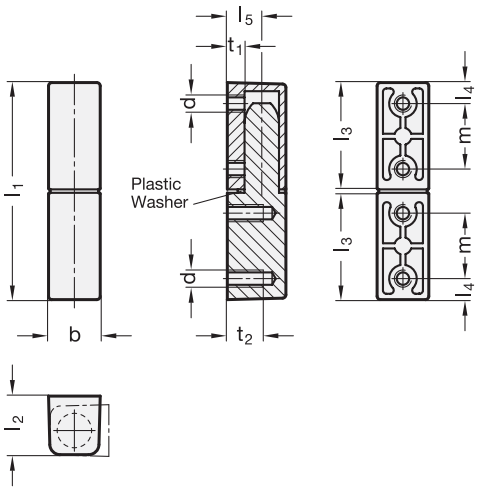

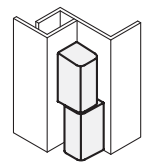

Inch sizes available

Mounting alternatives:

Door to be unhinged

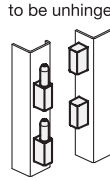

Door not to be unhinged

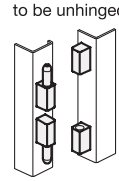

1 b	2 l_1	d	l_2	l_3	l_4	l_5	m	t_1	t_2	Radial load rating in N	Axial load rating in N
15	63	M 5	17	31	6,1	10	19	5	10	2300	1500

Specification

3

- Zinc die casting
  plastic coated
  black, RAL 9005, textured finish ● SW
  silver, RAL 9006, textured finish ● SR
- RoHS compliant

Information

Hinges GN 161.1 are a variant with highly attractive design. The fixing screws are invisible.

During the load tests, the hinges were gradually loaded and relieved at room temperature with incrementally increasing force.

For the specified values, an insignificant permanent deformation remained after relieving the load which had no effect on the function and appearance. In most cases, the failure loads are multiples of the specified value.

The details relating to the load bearing capacity are non-binding recommended values and rule out any liability. They constitute no general warranty of quality and condition.

The user must determine from case to case whether a product is suitable for the intended use. Environmental influences and aging may influence these values.

How to order		
GN 161.1-15-63-SR (1 2 3)	1	b
	2	l_1
	3	Colour

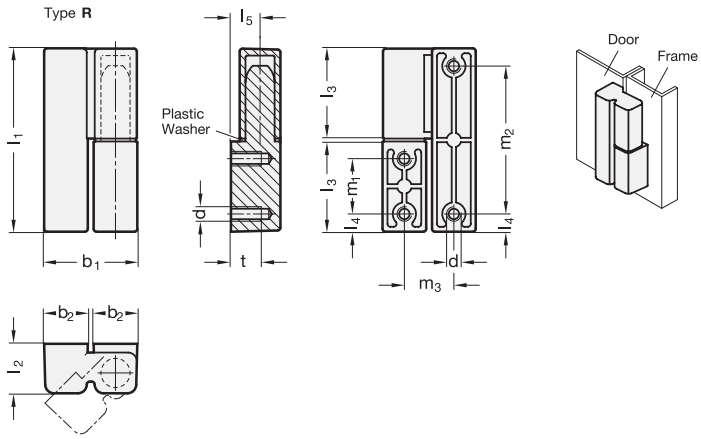

Inch sizes available

3 Type

R fixed bearing (pin) right
L fixed bearing (pin) left

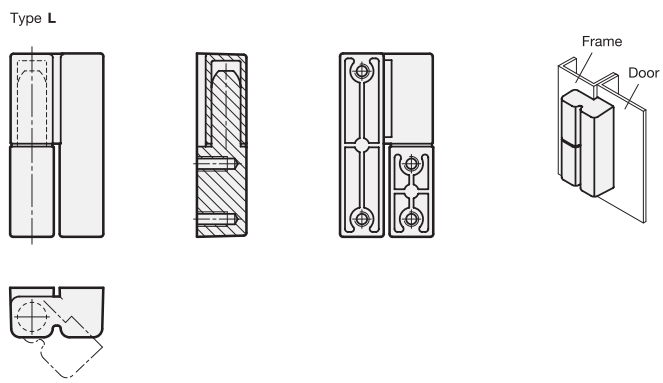

1 b_1	2 l_1	b_2	d	l_2	l_3	l_4	l_5	m_1	m_2	m_3	t	Radial load rating in N	Axial load rating in N
32	63	15	M 5	17	31	6,1	10	19	50,8	17	10	700	2000

Specification 4

- Zinc die casting
- plastic coated
  black, RAL 9005, textured finish ● SW
  silver, RAL 9006, textured finish ● SR
- RoHS compliant

Information

Hinges GN 161.2 are a variant with highly attractive design. The fixing screws are invisible.

During the load tests, the hinges were gradually loaded and relieved at room temperature with incrementally increasing force. For the specified values, an insignificant permanent deformation remained after relieving the load which had no effect on the function and appearance. In most cases, the failure loads are multiples of the specified value.

The details relating to the load bearing capacity are non-binding recommended values and rule out any liability. They constitute no general warranty of quality and condition. The user must determine from case to case whether a product is suitable for the intended use. Environmental influences and aging may influence these values.

How to order

1 2 3 4
GN 161.2-32-63-R-SW

1	b_1
2	l_1
3	Type
4	Colour

2.6 Oil level sight glasses Level indicators Plugs

2.6 Oil level sight glasses, Level indicators, Plugs

GN 743
Oil level sight glasses
Aluminium / Float-glass
→ *Page 902*

GN 743.7
Oil level sight glasses
with conical thread
Brass / Float-glass
→ *Page 906*

GN 7490
Welding sockets
Steel
→ *Page 911*

GN 743.1
Oil level sight glasses
Aluminium / ESG-glass
→ *Page 902*

GN 743.8
Oil level sight glasses
with conical thread
Brass / ESG-glass
→ *Page 906*

GN 650
Oil level indicators
Plastic
→ *Page 912*

GN 743.2
Oil level sight glasses
Brass / Float-glass
→ *Page 903*

GN 744
Prismatic oil level sight glasses
Aluminium / Plastic
→ *Page 907*

GN 650.1
Oil level indicators
Plastic / Stainless Steel-screw
→ *Page 912*

GN 743.3
Oil level sight glasses
Brass / ESG-glass
→ *Page 903*

GN 537
Oil level sight glasses
Aluminium / Perspex
→ *Page 908*

GN 650.2
Oil level indicators
Plastic
with protective housing
→ *Page 913*

GN 743.4
Oil level sight glasses
Stainless Steel / Float-glass
→ *Page 904*

GN 537.1
Pin keys
for installation of GN 537
→ *Page 908*

GN 650.4
Oil level indicators
narrow shape
Plastic
→ *Page 914*

GN 743.5
Oil level sight glasses
Stainless Steel / ESG-glass
→ *Page 904*

GN 541
Oil level sight glasses
Plastic
→ *Page 909*

GN 745
Threaded plugs
Plastic
→ *Page 915*

GN 743.6
ATEX-Sight glasses
Aluminium / ESG-glass
→ *Page 905*

GN 543.1
Fixing nuts
for oil level sight glasses
Brass
→ *Page 910*

GN 745.1
Aluminium discs
for GN 745
neutral
→ *Page 915*

Stainless Steel | Ergostyle | Softline | Cleanline | Sanline | ATEX | ESD | Inch

GN 747.1
Aluminium discs
for GN 745
with re-fill symbol

→ Page 915

GN 442
Threaded plugs
Aluminium / Viton-Seal

→ Page 919

GN 109
Level markings / Special lengths
for oil dipsticks

→ Page 925

GN 740.1
Aluminium discs
for GN 745
with drain symbol

→ Page 915

GN 749
Threaded plugs
Steel

→ Page 920

GN 880
Oil drain valves
Steel, Brass

→ Page 926

GN 741
Threaded plugs
with and without Symbol
Aluminium

→ Page 916

DIN 906
Threaded plugs
with conical thread
Steel

→ Page 921

GN 880.1
Connector pieces
for oil drain valves
Brass

→ Page 928

GN 742
Threaded plugs
with and without Symbol,
Aluminium / Viton-Seal

→ Page 916

DIN 906
Threaded plugs
with conical thread
Stainless Steel

→ Page 921

GN 880.1
Connector pieces with drain hose
for oil drain valves
Brass

→ Page 928

GN 738
Magnetic plugs
Aluminium

→ Page 918

GN 552
Breather caps
Plastic

→ Page 922

GN 881
Breather valves
Brass

→ Page 929

GN 738.1
Magnetic plugs
Aluminium / Viton-Seal

→ Page 918

GN 552
Breather caps
with dipstick
Plastic

→ Page 922

GN 882
Breather filters
Brass

→ Page 930

GN 441
Threaded plugs
Aluminium

→ Page 919

GN 552.6
ATEX-Breather caps
Plastic

→ Page 924

GN 883
Breather valves
Brass

→ Page 931

Stainless Steel | Ergostyle | Softline | Cleanline | Sanline | ATEX | ESD | Inch

Oil level sight glasses

Aluminium / Natural glass

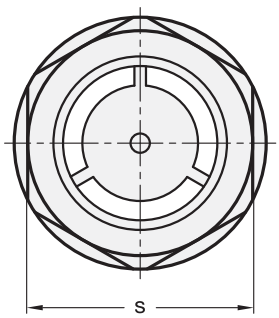

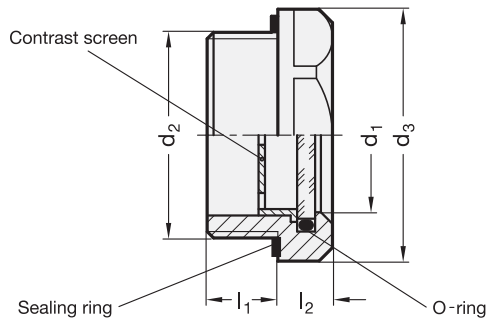

3 Type

A with contrast screen
B without contrast screen

1	2						
d_1	d_2			d_3	l_1	l_2	s
11	G ⅜	M 16 x 1,5	-	22	8	7,5	20
14	G ½	M 20 x 1,5	-	26	8,5	7,5	23
18	G ¾	M 26 x 1,5	M 27 x 1,5	32	9	8	30
24	G 1	M 33 x 1,5	-	40	11	8,5	36
32	G 1¼	M 40 x 1,5	M 42 x 1,5	50	12	9	46
32	G 1½	-	-	60	13	9	55

Specification

- Body
  Aluminium
  fine turned
- Contrast screen
  Technopolymer (Polysulfon)
- **GN 743**
  - temperature resistant up to **100 °C**
  - Sight glass Float-glass
  - Sealing ring rubber NBR (Perbunan)
- **GN 743.1**
  - temperature resistant up to **180 °C**
  - Sight glass ESG-glass
  - Sealing ring rubber FPM (Viton®)
    Identification by not black finish of the sealing ring
- *Elastomer characteristics* → *Page 1140*

Accessory

- Fixing nut GN 543.1 → *Page 910*

On request

- EPDM seal

Information

Oil level sight glasses GN 743 / GN 743.1 offer genuine glass of high stability and scratch proof. The sealing is achieved with an O-ring on the **periphery** and not on the face edge of the glass. Leak tightness is therefore not affected by axial pressures.

The outside diameter of these oil level sight glasses with recessed hexagon is chosen to match mounting holes for tube connections according to DIN 3852.

The seal is housed in a groove and it can therefore not be lost. In addition, this groove prevents the seal from being extruded when the sight glass is tightened.

Oil level sight glasses GN 743 / GN 743.1 can be used on pressurised oil tanks. Tests regarding maximum pressure are available on request.

Assembly instruction:

For mounting on walls of less than 4 mm thickness please use a fixing nut GN 543.1.

see also...

- *Stainless Steel-Oil level sight glasses GN 743.5* → *Page 904*
- *ATEX-Sight glasses GN 743.6* → *Page 905*

Oil level sight glass, NBR seal

1 2 3
GN 743-32-M40x1,5-A

1	d_1
2	d_2
3	Type

Oil level sight glass, Viton seal

1 2 3
GN 743.1-18-G¾-B

1	d_1
2	d_2
3	Type

Oil level sight glasses

Brass / Natural glass

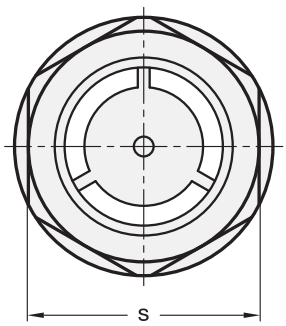

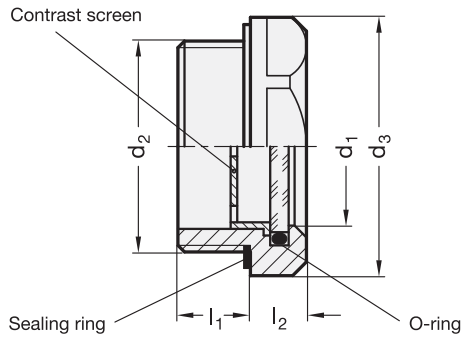

3 Type

A with contrast screen
B without contrast screen

1 d_1	2 d_2			d_3	l_1	l_2	s
11	G ⅜	M 16 x 1,5	-	22	8	7,5	20
14	G ½	M 20 x 1,5	-	26	8,5	7,5	23
18	G ¾	M 26 x 1,5	M 27 x 1,5	32	9	8	30
24	G 1	M 33 x 1,5	-	40	11	8,5	36

Specification

- Body
  Brass
  CuZn40Pb2
- Contrast screen
  Technopolymer (Polysulfon)
- **GN 743.2**
  - temperature resistant up to **100 °C**
  - Sight glass Float-glass
  - Sealing ring rubber NBR (Perbunan)
- **GN 743.3**
  - temperature resistant up to **180 °C**
  - Sight glass ESG-glass
  - Sealing ring rubber FPM (Viton®)
    Identification by not black finish of the sealing ring
- *Elastomer characteristics* → *Page 1140*
- RoHS compliant

Accessory

- Fixing nut GN 543.1 → *Page 910*

On request

- EPDM seal

Information

Oil level sight glasses GN 743.2 / GN 743.3 offer genuine glass of high stability and scratch proof. The sealing is achieved with an O-ring on the **periphery** and not on the face edge of the glass. Leak tightness is therefore not affected by axial pressures.

The outside diameter of these oil level sight glasses with recessed hexagon is chosen to match mounting holes for tube connections according to DIN 3852.

The seal is housed in a groove and it can therefore not be lost. In addition, this groove prevents the seal from being extruded when the sight glass is tightened.

Oil level sight glasses GN 743.2 / GN 743.3 can be used on pressurised oil tanks. Tests regarding maximum pressure are available on request.

Assembly instruction:

For mounting on walls of less than 4 mm thickness please use a fixing nut GN 543.1.

see also...

- *Stainless Steel-Oil level sight glasses GN 743.5* → *Page 904*
- *ATEX-Sight glasses GN 743.6* → *Page 905*

Oil level sight glass
1 2 3
GN 743.2-24-M33x1,5-A

1	d_1
2	d_2
3	Type

Oil level sight glass
1 2 3
GN 743.3-18-G¾-B

1	d_1
2	d_2
3	Type

Stainless Steel-Oil level sight glasses

Natural glass

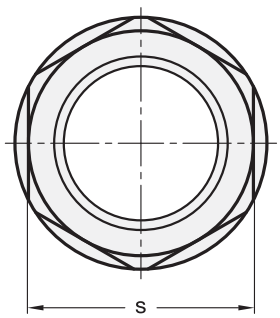

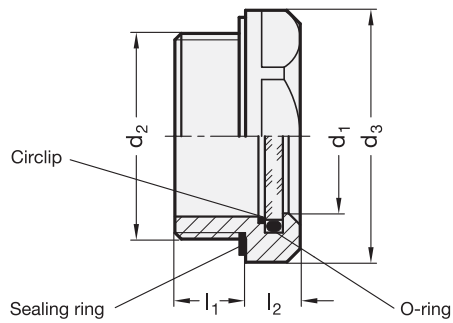

Inox Stainless Steel

3 Type

B without contrast screen

1	2					
d_1	d_2		d_3	l_1	l_2	s
11	G ⅜	M 16 x 1,5	22	8	7,5	20
14	G ½	M 20 x 1,5	26	8,5	7,5	23
18	G ¾	M 26 x 1,5	32	9	8	30
24	G 1	M 33 x 1,5	40	11	8,5	36
32	G 1¼	M 42 x 1,5	50	12	9	46

Specification

- Body
  Stainless Steel AISI 303
- Circlip
  Stainless Steel AISI 301
- **GN 743.4**
  - temperature resistant up to **100° C**
  - Sight glass Float-glass
  - Sealing ring rubber NBR (Perbunan)
- **GN 743.5**
  - temperature resistant up to **180° C**
  - Sight glass ESG-glass
  - Sealing ring rubber FPM (Viton®)
    Identification by not black finish of the sealing ring
- *Elastomer characteristics* → *Page 1140*
- *Stainless Steel characteristics* → *Page 1144*
- RoHS compliant

On request

- EPDM seal

Information

Stainless Steel-Oil level sight glasses GN 743.4 / GN 743.5 offer genuine glass of high stability and scratch proof. The sealing is achieved with an O-ring on the **periphery** and not on the face edge of the glass. Leak tightness is therefore not affected by axial pressures.

The outside diameter of these oil level sight glasses with recessed hexagon is chosen to match mounting holes for tube connections according to DIN 3852.

The seal is housed in a groove and it can therefore not be lost. In addition, this groove prevents the seal from being extruded when the sight glass is tightened.

Stainless Steel-Oil level sight glasses GN 743.4 / GN 743.5 can be used on pressurised oil tanks. Tests regarding maximum pressure are available on request.

see also...
- *Oil level sight glasses GN 743 / GN 743.1 (Alu-Body)* → *Page 902*
- *Oil level sight glasses GN 743.2 / GN 743.3 (Brass-Body)* → *Page 903*

Stainless Steel-Oil level sight glass		
1 2 3	1	d_1
GN 743.4-14-G½-B	2	d_2
	3	Type

Stainless Steel-Oil level sight glass		
1 2 3	1	d_1
GN 743.5-24-G1-B	2	d_2
	3	Type

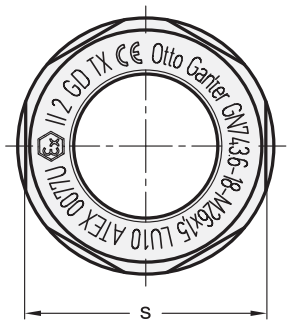

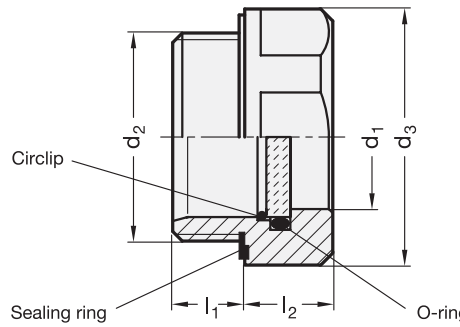

1 d_1	2 d_2				d_3	l_1	l_2	s
11	G 3/8	M 16 x 1,5	-	-	22	8	8	20
14	G 1/2	M 20 x 1,5	-	-	26	8,5	9	23
18	G 3/4	M 26 x 1,5	M 27 x 1,5	M 27 x 2	32	9	11	30

Specification

- Body
  Aluminium
  Surface fine turned
- Sight glass
  ESG-glass
- Sealing ring
  rubber FPM (Viton®)
- Circlip
  Stainless Steel AISI 301
- Temperature range:
  -20 °C up to +150 °C
- *Elastomer characteristics* → *Page 1140*
- *Stainless Steel characteristics* → *Page 1144*

Accessory

- Fixing nuts GN 543.1 → *Page 910*

On request

- EPDM seal

Information

ATEX-Sight glasses GN 743.6 are suitable for use in an explosion risk environment. They comply with the guidelines 94/9/EG.Detailed documentation is available and forms part of an order for this product.

A detailed operating instruction is included.

Further salient points of the oil level sight glasses GN 743.6 are:

Genuine glass of high stability and scratch proof. The sealing is achieved with an O-ring on the **periphery** and not on the face edge of the glass. Leak tightness is therefore not affected by axial pressures.

The sealing ring is embedded in a radial groove and cannot drop out, nor can it be extruded when tightening torque is applied.

Sight glasses GN 743.6 can be used on pressurised oil tanks. Tests regarding maximum pressure are available on request.

Assembly instruction:

For mounting on walls of less than 4 mm thickness please use a fixing nut GN 543.1.

How to order		
GN 743.6-18-G3/4 (1 = 18, 2 = G3/4)	1	d_1
	2	d_2

Oil level sight glasses

with conical thread

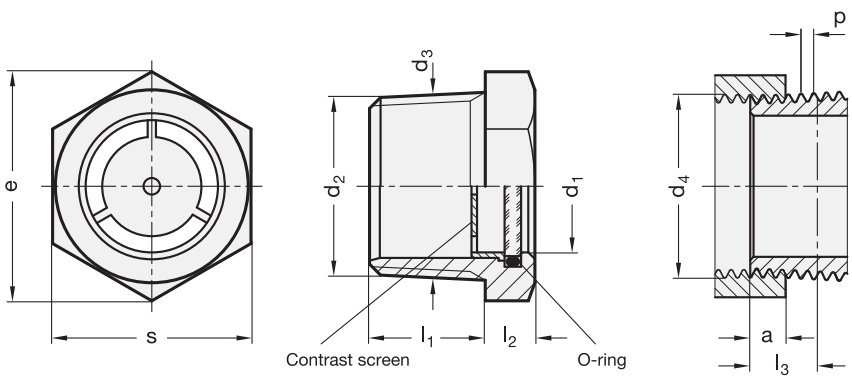

3 Type

A with contrast screen
B without contrast screen

1 d_1	2 d_2 Male thread conical	a Datum plane	d_3 at a	d_4 Female thread cylindrical	d_4 conical	e	l_1	l_2	l_3 Usable thread length	s	p Thread pitch
11	R ⅜	6,4	16,7	Rp ⅜	-	22	13	6	10,1	19	1,34
11	⅜ NPT	6,1	17,1	-	⅜ NPT	22	15	6	-	19,1	1,41
14	R ½	8,2	21	Rp ½	-	27,5	17	7	13,2	24	1,81
14	½ NPT	8,1	21,2	-	½ NPT	27,5	16	7	-	23,8	1,81
18	R ¾	9,5	26,4	Rp ¾	-	31	18	8	14,5	27	1,81
18	¾ NPT	8,6	26,6	-	¾ NPT	33	18	8	-	28,6	1,81
24	R 1	10,4	33,2	Rp 1	-	40,5	21	9	16,8	36	2,30
24	1 NPT	10,2	33,7	-	1 NPT	41,5	22	8	-	34,9	2,21
32	R 1 ¼	12,7	42	Rp 1 ¼	-	53	24	9	19,1	46	2,30
32	1 ¼ NPT	10,7	42,2	-	1 ¼ NPT	51,5	23	9	-	44,5	2,21

Specification

- Body
  Brass
  CuZn40Pb2
- Contrast screen
  Technopolymer (Polysulfon)
- **GN 743.7**
  - temperature resistant up to **100 °C**
  - Sight glass Float-glass
  - O-Ring rubber NBR (Perbunan)
- **GN 743.8**
  - temperature resistant up to **180 °C**
  - Sight glass ESG-glass
  - O-Ring rubber FPM (Viton®)
    Identification by not black finish of the sealing ring
- *Elastomer characteristics → Page 1140*
- RoHS compliant

On request

- EPDM O-rings

Information

The conical thread of the oil level sight glasses GN 743.7 / GN 743.8 makes a metallic seal possible. When tightening the conical male thread R it blocks itself with the appropriate cylindrical female thread Rp.

With the datum plane a the R-male thread has the same thread diameter as the Rp-female thread, so that it can be screwed in by hand. The strong tightening by means of a tool increases the length of engagement and seals the screw connection. Additionally a sealant (hemp or teflon band) is usually used. The R-thread is „roughened“, so that the sealant does not shift when screwing in.

see also...

- *More characteristics of these oil level sight glasses see GN 743.2 / GN 743.3 → Page 903*

Oil level sight glass with conical thread		
1 2 3	1	d_1
GN 743.7-24-R1-A	2	d_2
	3	Type

Oil level sight glass with conical thread		
1 2 3	1	d_1
GN 743.8-18-¾NPT-B	2	d_2
	3	Type

Prismatic oil level sight glasses

Aluminium / crystal-clear Plastic

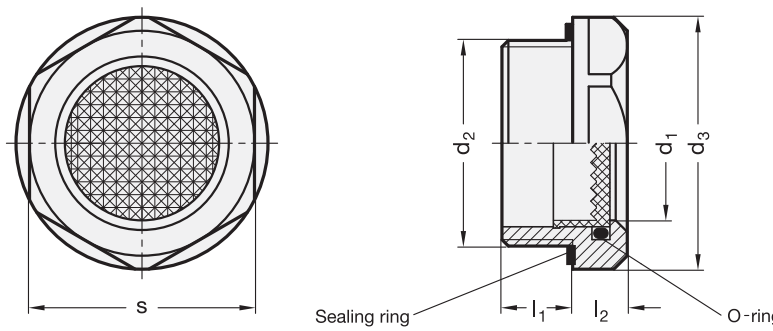

1	2						
d_1	d_2			d_3	l_1	l_2	s
14	G ½	M 20 x 1,5	-	26	8,5	7,5	23
18	G ¾	M 26 x 1,5	M 27 x 1,5	32	9	8	30
24	G 1	M 33 x 1,5	-	40	11	8,5	36

Specification

- Body
  Aluminium
  fine turned
- Sight glass
  Plastic
  - crystal-clear Polyamide (PA-T)
  - temperature resistant up to 110 °C
- Sealing ring
  rubber NBR (Perbunan)
- *Elastomer characteristics* → *Page 1140*
- *Plastic characteristics* → *Page 1141*

Accessory

- Fixing nuts GN 543.1 → *Page 910*

On request

- EPDM seal

Information

Prismatic oil level sight glasses GN 744 use the so called prismatic effect of a cat's eye to display the oil level unaffected by oil colour or oil viscosity. The advantage of this effect is particularly obvious in the case of under or overfilling or for inspection under unfavourable light conditions.

The seal is housed in a radial groove in the aluminium body and hence cannot be lost. In addition it cannot be extruded when thigtening the sight glass.

Oil level sight glasses GN 744 can also be used on pressurised tanks. Data of pressure an vacuum pressure tests is available.

Assembly instruction:

For mounting on walls of less than 4 mm thickness please use a fixing nut GN 543.1.

How to order		
GN 744-24-G1 (1 = d_1, 2 = d_2)	1	d_1
	2	d_2

Oil level sight glasses

Aluminium / Perspex

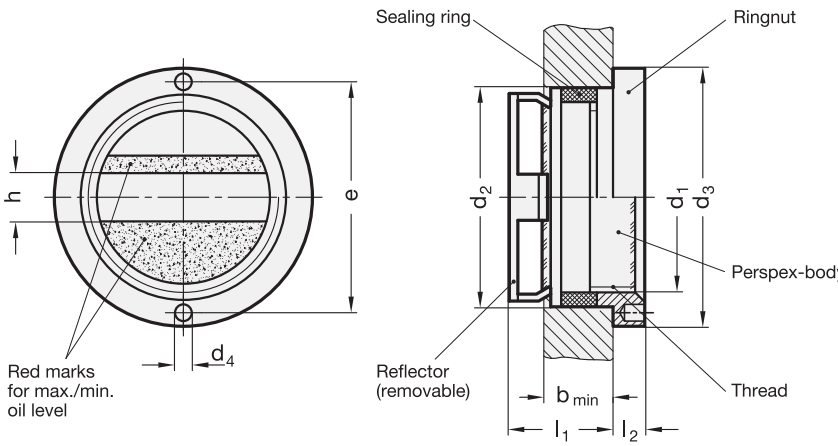

3 Type

A without oil level mark
B with oil level mark

1 d_1 Window glass	2 d_2 Bore-Ø	b min.	d_3	d_4	e ±0,1	h	l_1	l_2	Code no. for Pin key for installation
16	20	9	25	2,2	21	5	15	3,5	GN 537.1-21
22	28	10	35	3	30	6	15	4,5	GN 537.1-30
32	38	12	45	3	40	8	18	5,5	GN 537.1-40
50	58	14	64	3	58,5	10	22	5,5	GN 537.1-58,5

Specification

- Ring nut
  Aluminium
- Sight glass
  Perspex (PMMA)
  temperature resistant up to 80 °C
- Sealing ring
  rubber NBR (Perbunan)
- Contrast screen
  Plastic
  white, with red oil level marks
- *Elastomer characteristics* → *Page 1140*
- RoHS compliant

Accessory

- Pin key for installation GN 537.1
  (Code no. see table)

Information

This oil level glass GN 542 does not require a thread.

The oil level sight glass is inserted into the bore d_2 to H11. By simply tightening the ring nut using the pin key the seal is pressed against the contact surface which, at the same time, will hold the sight glass in position. For removal reverse the procedure.

Their application is limited to non-pressurised or only slightly pressurised tanks.

How to order		
GN 537-32-38-B (1 2 3)	1	d_1
	2	d_2
	3	Type

Oil level sight glasses

Crystal-clear Plastic

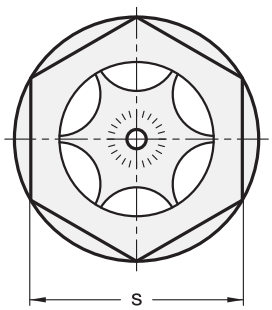

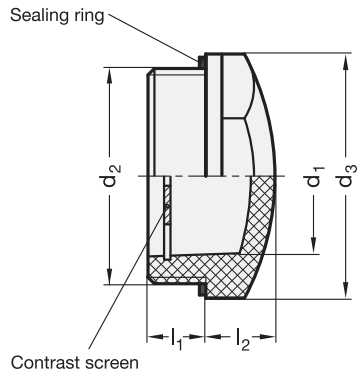

ELESA Original design HFTX.

3 Type

A with contrast screen
B without contrast screen

1 d_1 Window glass	2 d_2		d_3	l_1	l_2	s	recommended tightening torque in Nm	
9	G ¼	-	18	10	6	15	G ¼ : 2 ... 3	-
11	G ⅜	M 16 x 1,5	22	8	7	19	G ⅜ : 3 ... 5	M 16 x 1,5: 2 ... 3
14	G ½	M 20 x 1,5	26	10	8	22	G ½ : 4 ... 6	M 20 x 1,5: 8 ... 10
18	-	M 25 x 1,5	31	8	10	27	-	M 25 x 1,5: 8 ... 10
19	-	M 26 x 1,5	31	13	9	27	-	M 26 x 1,5: 8 ... 10
20	G ¾	M 27 x 1,5	31	10	10	27	G ¾ : 6 ... 8	M 27 x 1,5: 8 ... 10
22	-	M 30 x 1,5	35	9	10	30	-	M 30 x 1,5: 8 ... 10
25	G 1	M 35 x 1,5	40	11	10	34	G 1 : 8 ... 10	M 35 x 1,5: 8 ... 10
30	G 1¼	M 40 x 1,5	47	12	13	41	G 1¼: 8 ... 10	M 40 x 1,5: 8 ... 10

Specification

- Plastic
  Crystal-clear Polyamide (PA-T)
  - ageing resistant
  - high mechanical strength, but not suitable for alcohol
  - temperature resistant up to 110 °C
  - solvent resistant, but not suitable for alcohol
- Sealing ring rubber NBR (Perbunan)
- Contrast screen Aluminium anodized, natural colour
- *Elastomer characteristics* → *Page 1140*
- *Plastic characteristics* → *Page 1141*
- RoHS compliant

Accessory

- Fixing nut GN 543.1 → *Page 910*

Information

Oil level sight glasses GN 541 are practically indestructible. Even at high torque there is no danger of any breakage.

Oil level sight glasses GN 541 can also be used in tanks which are pressurised. The max permissible pressure is dependent on the tank size operating conditions (i.e. temperature). Test results are available.

Assembly instruction:

For mounting on walls of less than 4 mm thickness please use a fixing nut GN 543.1.

How to order

GN 541-18-M25x1,5-A (1 = 18, 2 = M25x1,5, 3 = A)

1	d_1
2	d_2
3	Type

Fixing nuts

for oil level sight glasses

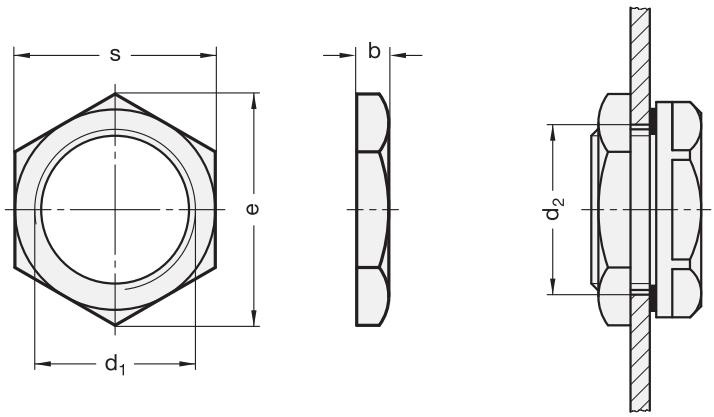

1

d_1	d_2 +0,5 Bore-Ø	b	s	e ≈
G ⅜	16,7	3,5	19	22
G ½	21	4	25	30
G ¾	26,5	5	32	35,5
G 1	33,3	5	37	42,5
G 1¼	42	5,5	46	52
G 2	59,7	6,5	65	73

Specification

- Brass
  blank
- RoHS compliant

Information

Fixing nuts GN 543.1 are used for mounting of oil level sight glasses on walls of less than 4 mm thickness.

How to order		
1 GN 543.1-G½	1	d_1

Welding sockets

with and without collar

Type **A**

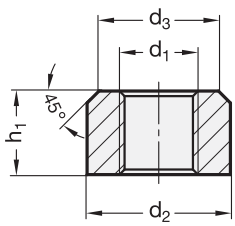

Type **B**

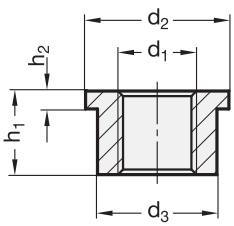

Example of application

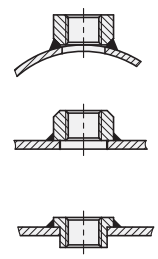

3 Type

A with chamfer
B with collar

2

d_1	d_2	d_3	h_1	h_2
G 1/8	20	16	10	3
G 1/4	24	20	14	3
G 3/8	28	22	14	4,5
G 1/2	32	26	16	4,5
G 3/4	40	32	18	6
G 1	50	40	20	7,5
G 1 1/4	60	50	22	7,5
G 1 1/2	65	55	24	7,5

Specification

1

- Steel **ST**
  - weldable
  - turned
  - blank
- RoHS compliant

On request

- Stainless Steel-Welding sockets
- metric threads

Information

Welding sockets GN 7490 are used in container construction or in hydraulics for mounting instruments such as oil level sight glasses or locking caps.

The plane surfaces are machined, with the effect that they can be used as sealing surface in connection with a sealing element or compound.

The favourably dimensioned wall thickness prevents deformation or burn-through during welding.

Type B is used if exact positioning through the mounting bore or a low construction height is required.

How to order		
GN 7490-ST-G1/2-B (1 2 3)	1	Material
	2	d_1
	3	Type

Oil level indicators

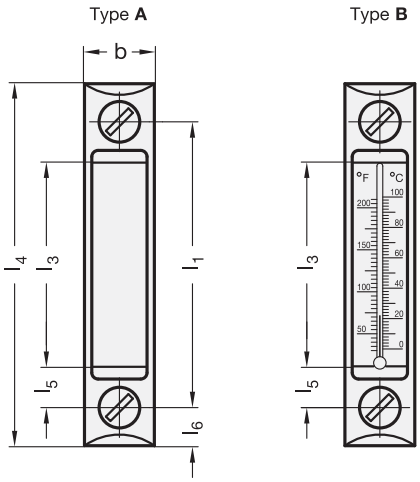

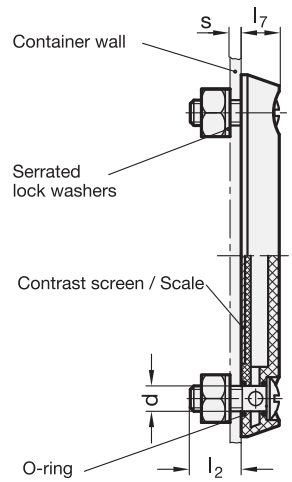

ELESA Original design HCX./HCX-SST

Rost frei Inox Stainless Steel

2 Type

A without thermometer
B with thermometer

1

l_1	b	d	l_2	l_3	l_4	l_5	l_6	l_7	s ≈ max. wall thickness	Thermometer scale °C	°F
76	27	M10	21	40	106	18	15	16	12	20 ... 100	68 ... 210
127	31	M12	23	80	161	23	17	17	12	0 ... 100	32 ... 210
254	35	M12	21	203	290	26	18	18	12	0 ... 100	32 ... 210

Specification

- Body Plastic
  crystal-clear Polyamide (PA-T)
  - ageing resistant
  - high mechanical strength
  - temperature resistant up to 90 °C
  - solvent resistant,
    but not suitable for alcohol
  - avoid contact with hot water
- Contrast screen Aluminium
  - white lacquered
  - with two black marking lines / scale
- **GN 650**
  - O-Rings rubber NBR (Perbunan)
  - Set screw and nuts
    Steel, zinc plated, blue passivated
- **GN 650.1**
  - O-Rings rubber FPM (Viton®)
  - Set screw and nuts
    Stainless Steel AISI 303
- RoHS compliant

On request

- Oil level indicators GN 650 (AR)
  suitable for alcohol
- Oil level indicators GN 650.1 (BW)
  suitable for hot water

Information

A special feature of oil level indicators GN 650 / GN 650.1 is their reduced dimension. The liquid level is visible even from side positions.

The polyamide body consists of two parts which are ultrasonically welded together. The oil level indicators are individually air pressure tested for leaks at 3 bar.

All oil level indicators GN 650 / GN 650.1 can also be used on tanks which are pressurised. Pressure test results regarding resistance under pressure are available.

As a contrast screen, a white lacquered aluminium strip is used which shows marking lines or temperature scale. The scale is placed behind and outside the liquid column as a protective measure.

The shape of the oil level indicators offers a magnifying effect which makes the scale easily legible.

see also...
- *Oil level indicators GN 650.4*
  (reasonbly priced, narrow Type) → *Page 914*

Oil level indicators 1 2 GN 650-127-A	1	l_1
	2	Type

Oil level indicators 1 2 GN 650.1-76-B	1	l_1
	2	Type

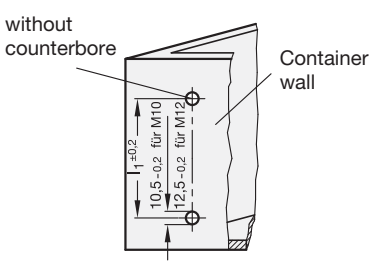

Assembly instructions

The assembly of the oil level indicators GN 650 / GN 650.1 / GN 650.4 is very easy and economical. You need two drillings Ø 10,5 and/or Ø 12,5 mm in the distance l1 in te containerv wall. The oil level indicator can also be installed directly i.e. without nut, if the container wall has a fitting thread.
All individual parts necessary for the assembly are provided: zinc-plated set screws with the drillings for oil, zinc-plated hexagon nuts, O-rings and serrated lock washers for safe guard. For perfect sealing by the O-rings the screws should not be too strongly tightened (max. 12 Nm). Recommended roughness of the sealing surface RA = 3 µm.

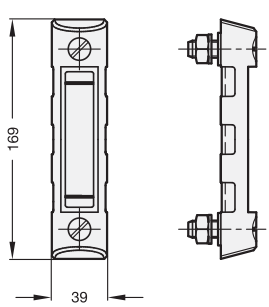

Protective housing

3

Oil level indicators GN 650 l_1 = 127 are also available with a guard (P) made of zinc die-casting (rear-end collision protection).

Oil level indicators with protective housing 1 2 3 GN 650.2 -127-B-P		
	1	l_1
	2	Type
	3	protective housing

Oil level indicators

narrow shape

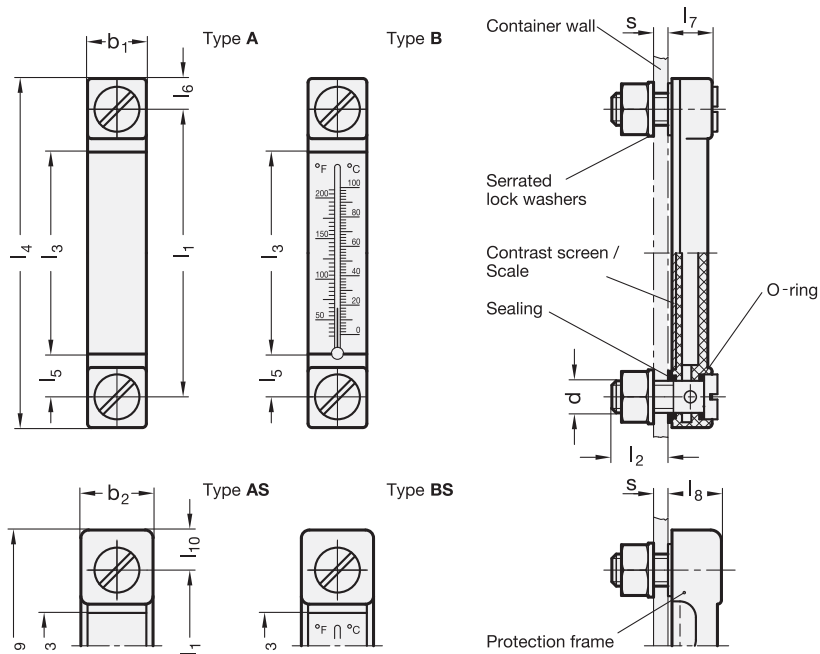

ELESA Original design HCZ

2 Type

- **A** with neutral contrast screen, without protection frame
- **B** with thermometer, without protection frame
- **AS** with neutral contrast screen, with protection frame
- **BS** with thermometer, with protection frame

1

l_1	b_1	b_2	d	l_2	l_3	l_4	l_5	l_6	l_7	l_8	l_9	l_{10}	s ≈ max. wall thickness	Thermometer scale °C	Thermometer scale °F
76	22	27	M 10	23	40	99	18	11,5	15	17,5	105	14,5	12	20 ... 100	68 ... 210
127	22	27	M 12	23	80	150	23	11,5	15	17,5	156	14,5	10	0 ... 100	32 ... 210

Specification

- Body
  Plastic
  crystal-clear Polyamide (PA 6-T)
  - ageing resistant
  - high mechanical strength
  - temperature resistant up to 90 °C
  - solvent resistant, but not suitable for alcohol
  - avoid contact with hot water
- Protection frame
  Plastic (Polyamide PA)
  - glass fibre reinforced
  - black, matt
- Contrast screen Aluminium
  - white lacquered
  - with two black marking lines / scale
- O-ring rubber NBR (Perbunan)
- Set screw and nuts
  Steel, zinc plated, blue passivated
- *Elastomer characteristics → Page 1140*
- *Plastic characteristics → Page 1141*

Information

A special feature of oil level indicators GN 650.4 is their reduced dimension. The liquid level is visible even from side positions.

The polyamide body consists of two parts which are ultrasonically welded together. The oil level indicators are individually air pressure tested for leaks at 3 bar.

All oil level indicators GN 650.4 can also be used on tanks which are pressurised. Pressure test results regarding resistance under pressure are available.

As a contrast screen, a white lacquered aluminium strip is used which shows marking lines or temperature scale.

The scale is placed behind and outside the liquid column as a protective measure.

The protection frame is designed to increase the resistance of the indicator by absorbing all shocks. The protection frame is mounted to the indicator.

How to order		
GN 650.4-127-A (1 = l_1, 2 = Type)	1	l_1
	2	Type

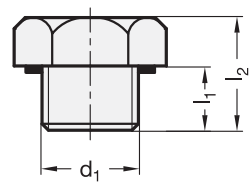

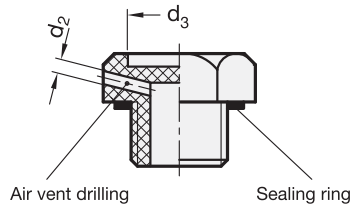

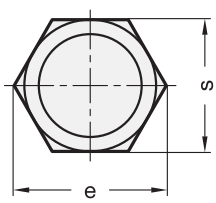

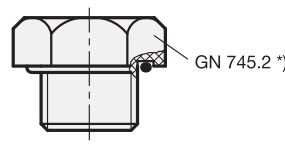

ELESA Original design TN.

2 Coding

1 without vent hole
2 with vent hole

1 d1				d2 Vent hole	3 d3	l1	l2	s	e ≈
G ⅛	M 10 x 1,5	M 12 x 1,5	-	2	15	9	15	19	21,5
G ¼	M 14 x 1,5	-	-	2	15	9	15	19	21,5
G ⅜	M 16 x 1,5	-	-	2	17,5	9	15	22	25
G ½*	M 18 x 1,5	M 20 x 1,5	-	2	21	11	18	26	29,5
G ¾*	M 22 x 1,5	M 25 x 1,5	M 26 x 1,5	2	25	12	20	32	36,5
G 1*	M 35 x 1,5	-	-	2	31	13	22	38	44
G 1¼	M 40 x 1,5	-	-	2	38	14	24	46	52,5
G 1½	-	-	-	2	46	15	26	55	63

* These sizes are also available as GN 745.2 with O-ring instead of a flat seal.

Specification

- Plastic (Polyamide PA)
  - glass fibre reinforced
  - black, matt
  - temperature resistant up to 130 °C
- Sealing ring rubber NBR (Perbunan)
- *Elastomer characteristics → Page 1140*
- *Plastic characteristics → Page 1141*
- RoHS compliant

Accessory

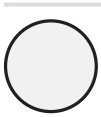

GN 745.1
neutral

GN 747.1
with re-fill symbol

GN 740.1
with drain symbol

Information

Suitable for threaded plugs GN 745 are self adhesive, matt anodized aluminium discs with graphic symbols (0.3 mm thick) which can be supplied.

see also...
- *Plugs GN 741 / GN 742 (Aluminium) → Page 916*

Plug with flat seal GN 745-G¾-1 (1 d1, 2 Coding)	1	d1
	2	Coding
Plug with O-ring GN 745.2-G½-1 (1 d1, 2 Coding)	1	d1
	2	Coding
Aluminium disc GN 740.1-25 (3 d3)	3	d3

Threaded plugs

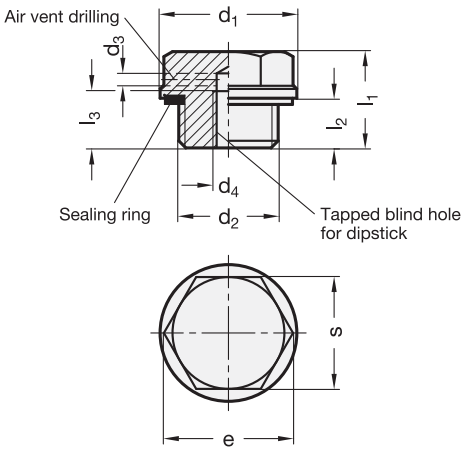

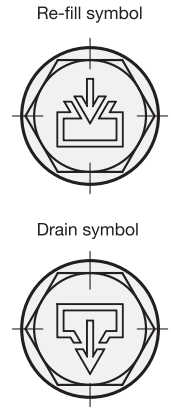

3 Type

OS neutral
ES with DIN re-fill symbol
AS with DIN drain symbol

4 Identification

1 without vent drilling
2 with vent drilling

1 d_1	2 d_2				d_3 Vent drilling	d_4	l_1	l_2	t	s	e ≈
19	G ¼	M 14 x 1,5	-	-	2	M 5	15,5	8	8	15	17,3
22	G ⅜	M 16 x 1,5	-	-	2	M 5	15,5	8	8	18	20,8
26	G ½	M 20 x 1,5	-	-	2	M 5	16	8,5	8	21	24,3
32	G ¾	M 26 x 1,5	M 27 x 1,5	-	2	M 5	17	9	8	27	31,2
40	G 1	M 33 x 1,5	-	-	2	M 5	19,5	11	8	32	37
50	G 1¼	M 40 x 1,5	M 42 x 1,5	M 42 x 2	2	M 5	21	12	8	41	47,3
60	G 1½	-	-	-	2	M 5	22	13	8	50	57,7

Specification

- Aluminium
  - fine turned
  - Symbols laser engraved
- **GN 741**
  - temperature resistant up to **100 °C**
  - Sealing ring rubber NBR (Perbunan)
- **GN 742**
  - temperature resistant up to **180 °C**
  - Sealing ring rubber FPM (Viton®)
    Identification by not black finish of seal
- *Elastomer characteristics* → *Page 1140*

On request

- with dipstick

Information

Threaded plugs GN 741 / GN 742 are fitted with outside diameter d_1 to suit screw holes with BSP threads to DIN 3852.

The sealing ring is bedded into a undercut groove which prevents it from dropping out and at the same time stops it from being extruded when tightening the cap.

see also...
- *Threaded plugs GN 745 (Plastic)* → *Page 915*
- *Threaded plugs with catch GN 441 / GN 442* → *Page 919*

Threaded plug

1 2 3 4
GN 741-26-G½-OS-1

1	d_1
2	d_2
3	Type
4	Identification

Threaded plug

1 2 3 4
GN 742-32-M26x1,5-ES-2

1	d_1
2	d_2
3	Type
4	Identification

Steel and Aluminium Plugs
GN 738 / GN 738.1 → *Page 918*
GN 741 / GN 742 → *Page 916*
GN 749 → *Page 920*

Magnetic plugs

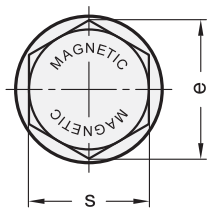

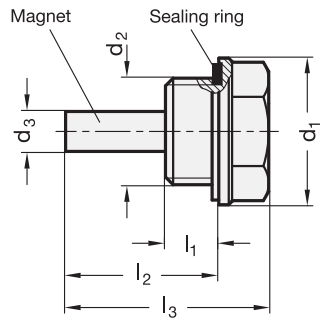

1 d_1	2 d_2				d_3	e ≈	l_1	l_2	l_3	s
19	G ¼	M 14 x 1,5	-	-	6	17,3	8	23	30,5	15
22	G ⅜	M 16 x 1,5	-	-	6	20,8	8	23	30,5	18
26	G ½	M 20 x 1,5	-	-	6	24,3	8,5	23,5	31	21
32	G ¾	M 26 x 1,5	M 27 x 1,5	-	6	31,3	9	24	32	27
40	G 1	M 33 x 1,5	-	-	6	37	11	26	34,5	32
50	G 1¼	M 40 x 1,5	M 42 x 1,5	M 42 x 2	6	47,3	12	27	37	41
60	G 1½	-	-	-	6	57,7	13	28	37	50

Specification

- Aluminium
  fine turned
- Magnet
  Alloy: AlNiCo
- **GN 738**
  - temperature resistant up to **100 °C**
  - Sealing ring rubber NBR (Perbunan)
- **GN 738.1**
  - temperature resistant up to **180 °C**
  - Sealing ring rubber FPM (Viton®)
    Identification by not black finish of seal
- *Elastomer characteristics* → *Page 1140*
- *Magnet characteristics* → *Page 1095*

Information

Magnetic plugs GN 738 / GN 738.1 attract iron particles which might be suspended in the liquid.

To avoid breakage or de-magnetising, round rod magnets are fitted with a plastic distance and protection tube. This latter tube has to be removed prior to installing the plug.

The sealing ring is retained in a radial undercut in the mating face which prevents it from dropping off and at the same time it cannot extrude under pressure.

Magnetic plugs up to 120 °C		
GN 738-22-G3/8 (1: 22, 2: G3/8)	1	d_1
	2	d_2

Magnetic plugs up to 180 °C		
GN 738.1-32-M26x1,5 (1: 32, 2: M26x1,5)	1	d_1
	2	d_2

Threaded plugs

with wrench

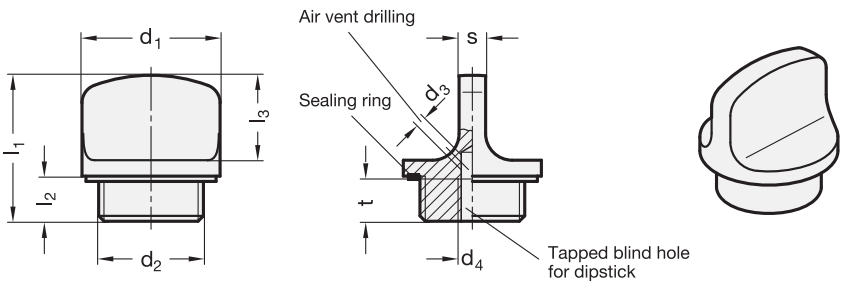

Inch sizes available

3 Identification no.

1 without vent hole
2* with vent hole

1 d_1	2 d_2		d_3 Vent hole	d_4	l_1 ±0,5	l_2	l_3	s	t min.
22	G 3/8	M 16 x 1,5	2	M 5	26	8	15	5	8
26	G 1/2	M 20 x 1,5	2	M 5	27,5	8,5	16	5	8
32	G 3/4	M 26 x 1,5	2	M 5	29	9	17	6	8
40	G 1	-	2	M 5	32,5	11	18	7	8

* not availble from stock, requires a minimum order quantity

Specification

4

- Aluminium
  - plastic coated black, RAL 9005, strukturmatt — ● SW
  - blank tumbled — ○ BL
- **GN 441**
  - temperature resistant up to 100 °C
  - Sealing ring rubber NBR (Perbunan)
- **GN 442**
  - temperature resistant up to 200 °C
  - Sealing ring rubber FPM (Viton®)
  - Identification by not black finish of the seal
- *Elastomer characteristics* → *Page 1141*
- RoHS compliant

On request

- Threaded plugs with dipstick

Information

Threaded plugs GN 441 / GN 442 with the external diameter d_1 match the screw-in holes for DIN 3852 pipe bolt connections.

The sealing ring is embedded in a radial recess on the plane side, which makes the sealing ring captive and cannot be squeezed out during tightening. The sealing is also relatively soft, enhancing the sealing effect also on uneven surfaces.

see also...

- *Plugs GN 741 / GN 742 (with hexagon)* → *Page 916*

Plug

1 2 3 4
GN 441-22-M16x1,5-1-BL

1	d_1
2	d_2
3	Identification no.
4	Finish

Plug

1 2 3 4
GN 442-40-G1-1-SW

1	d_1
2	d_2
3	Identification no.
4	Finish

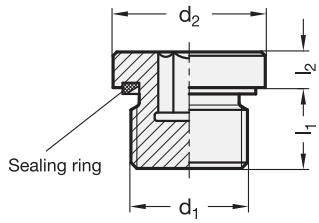

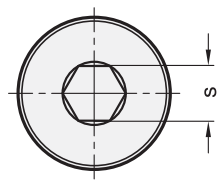

2 Type

A Sealing ring rubber NBR (Perbunan)

B Sealing ring rubber FPM (Viton®)

1

d_1			d_2 h14	l_1	l_2	s	max .permis-sible opreating pressure in PB	recommended tightening torque in Nm
M 8 x 1	-	-	12	8	4	4	400	8
M 10 x 1	-	G ⅛	14	8	4	5	400	12
M 12 x 1,5	-	-	17	12	5	6	400	25
M 14 x 1,5	-	G ¼	19	12	5	6	400	30
M 16 x 1,5	-	G ⅜	22	12	5	8	400	50
M 18 x 1,5	-	-	24	12	5	8	400	60
M 20 x 1,5	-	-	26	14	5	10	400	70
M 22 x 1,5	-	G ½	27	14	5	10	400	80
M 24 x 1,5	-	-	30	14	5	12	400	95
M 26 x 1,5	M 27 x 2	G ¾	32	16	5	12	400	120
M 30 x 1,5	-	-	37	16	6,5	17	400	190
-	M 33 x 2	G 1	40	16	6,5	17	400	225
-	M 42 x 2	G 1¼	50	16	6,5	22	315	360
-	M 48 x 2	G 1½	55	16	6,5	24	315	400

Specification

- Steel
  - Tensile strength class 5.8 (500 N/mm²)
  - ultrasonically and tensile tested
  - zinc plated, nano-passivated (silver / yellowish)
- Type **A**
  temperature resistant up to **100 °C**
  Sealing ring rubber NBR (Perbunan)
- Type **B**
  temperature resistant up to **180 °C**
  Sealing ring rubber FPM (Viton®)
  Identification by not black finish of the seal
- *Elastomer characteristics → Page 1140*
- RoHS compliant

Information

The dimensions of the threaded plugs GN 749 comply with DIN 908, but deviating from the latter is the elastic sealing ring (rubber). This sealling ring is retained in a radial undercut in the mating face which prevents it from dropping out and in particular it does not extrude when the plug is tightened.

The details relating to the permissible opreating pressure are non-binding recommended values and rule out any liability. They constitute no general warranty of quality and condition. The user must determine from case to case whether a product is suitable for the intended use.

How to order		
GN 749-G¾-A (1 = d1, 2 = Type)	1	d1
	2	Type

Threaded plugs

with conical thread

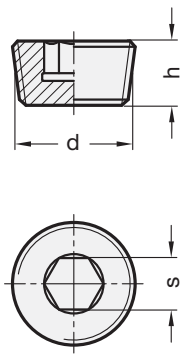

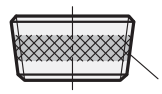

Pressure tightness with thread coating **GPC** (Precote 5)

Inox
Stainless
Steel

3 Type

A without micro encapsulation
GPC with micro encapsulation

2 d Steel ST	Stainless Steel NI	2 d Steel ST	Stainless Steel NI	h	s
M 8 x 1	M 8 x 1	-	-	8	4
M 10 x 1	M 10 x 1	R ⅛	R ⅛	8	5
M 12 x 1,5	M 12 x 1,5	-	-	10	6
M 14 x 1,5	M 14 x 1,5	R ¼	R ¼	10	7
M 16 x 1,5	M 16 x 1,5	-	-	10	8
M 18 x 1,5	M 18 x 1,5	R ⅜	R ⅜	10	8
M 20 x 1,5	M 20 x 1,5	R ½	R ½	10	10
M 22 x 1,5	M 22 x 1,5	-	-	10	10
M 24 x 1,5	M 24 x 1,5	-	-	12	12
M 26 x 1,5	-	-	-	12	12
-	-	R ¾	R ¾	12	12
M 30 x 1,5	-	R 1	R 1	12	17
M 36 x 1,5	-	-	-	15	19
M 42 x 1,5	-	R 1 ¼	-	18	22
M 45 x 1,5	-	-	-	18	22
M 48 x 1,5	-	R 1 ½	-	20	24

Specification

1

- Steel **ST**
  - ultrasonically and tensile tested
  - zinc plated, blue passivated
- Stainless Steel AISI 303 **NI**
- Thread coating **GPC** (Precote 5) → *Page 1130*
- *Stainless Steel characteristics* → *Page 1144*
- RoHS compliant

Information

Threaded plugs DIN 906 are used to close bore holes with cylindrical internal thread.

The tightness depends on the medium, pressure, temperature and material pairing. The design with GPC thread coating provides a higher degree of safety.

The official DIN 906 standard sheet also provides for thread sizes M33x2; M38x1,5; M39x2; M52x1,5; M52x2; M56x2 and M60x2.

Plug
1 2 3
DIN 906-ST-M36x1,5-GPC

1	**Material**
2	**d**
3	**Type**

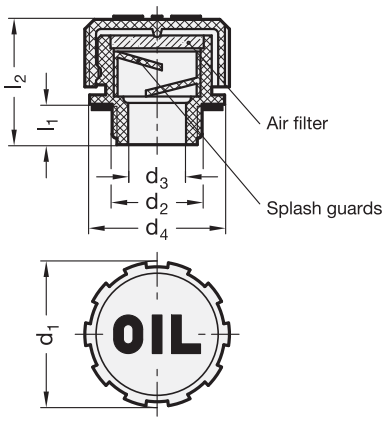

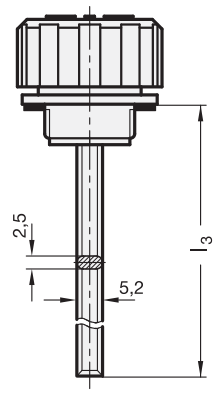

ELESA Original design SFN. / SFP.

3 Type

A without dipstick
B* with dipstick

4 Coding

0 with splash guards, with wire mesh filter
1 with splash guards, no filter
2 with splash guards, with PU filter
3 no splash guards, no filter
4 no splash guards, with PU filter

1	2							
d_1	d_2			d_3	d_4	l_1	l_2 ≈	l_3
31	G ¼	-	-	8	30	9,5	29,5	188
31	G ⅜	M 16 x 1,5	M 18 x 1,5	10	30	9,5	29,5	188
31	G ½	M 20 x 1,5	M 22 x 1,5	12	30	9,5	29,5	188
42	G ⅜	-	-	10	41	11,5	36,5	-
42	G ½	-	-	12	41	11,5	36,5	-
42	G ¾	-	-	18	41	11,5	36,5	184
42	G 1	-	-	23	41	11,5	36,5	184
57	G ¾	-	-	18	56	14	42	-
57	G 1	-	-	23	56	14	42	-
57	G 1¼	-	-	28	56	16	42	184
57	G 1½	-	-	28	56	16	42	184

Specification

- Plastic (Polyamide PA)
  temperature resistant up to 120 °C
- Upper part (cap)
  orange, RAL 2004
- Lower part (threaded part)
  black
- Sealing ring rubber NBR (Perbunan)
- Air filter wire mesh
  - zinc plated
  - Filtration 50 to 60 µm
- Air filter PU-foam (Polyurethan)
  - Filterfeinheit 40 µm
  - temperature resistant up to 100 °C
- Dipstick Steel
  - phosphated
  - Level markings /
    Special lengths GN 109 → *Page 925*
- RoHS compliant

Information

Function and operational criteria of breather caps GN 552 see function description.

MAX-MIN lines can easily be marked on the two flat sides of the dipstick (see GN 109 → *Page 925*).

* Type with Dipstick (Type B)
is only available for marks 0, 1 and 2 as follows:
Size 31 - all threads
Size 42 - G ¾ and G 1 only
Size 57 - G 1¼ and G 1½ only

see also...

- *ATEX-Breather caps GN 552.6 → Page 924*

How to order		
1 2 3 4 GN 552-42-G¾-A-1	1	d_1
	2	d_2
	3	Type
	4	Coding

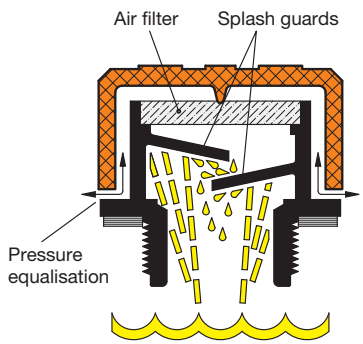

Function

Breather caps GN 552 are used in oil reservoirs which must be ventilated.

If the oil is agitated, e.g. by a gear running in an oil bath or sump, there is the risk that the oil will leak. With properly aligned and shaped splash guards (see schematic drawing), these breather caps prevent the oil from leaking without substantially disrupting the ventilation / breathing process (pressure compensation).

The splash guards can be left out if their function is no longer needed or if a higher air flow rate is desired (coding 3 and 4).

A filter is used to protect the oil from outside pollution (dust). The filter is mounted **behind** the splash guards to ensure it makes no contact with the oil and becomes saturated by capillary effect.

For a very high air flow rate (the level of the oil reservoir changing quickly), GN 663 breather caps should be used.

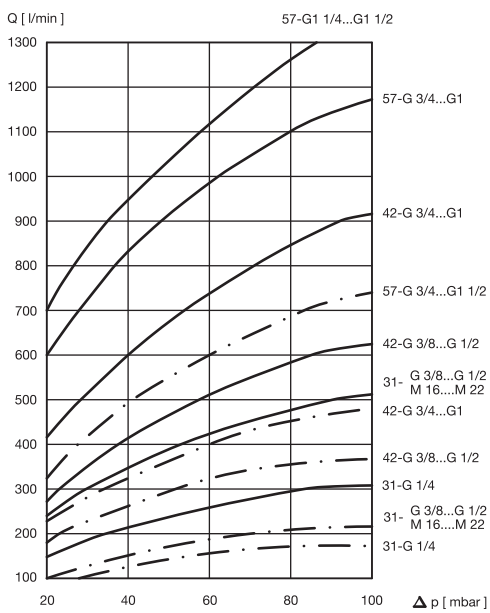

Air flow rate [l/min] in reliance on the pressure difference Δp [mbar] container / outside space
with filter (40 µm): — · —
without filter: ———
Type **without** splash guards (coding 3 and 4)

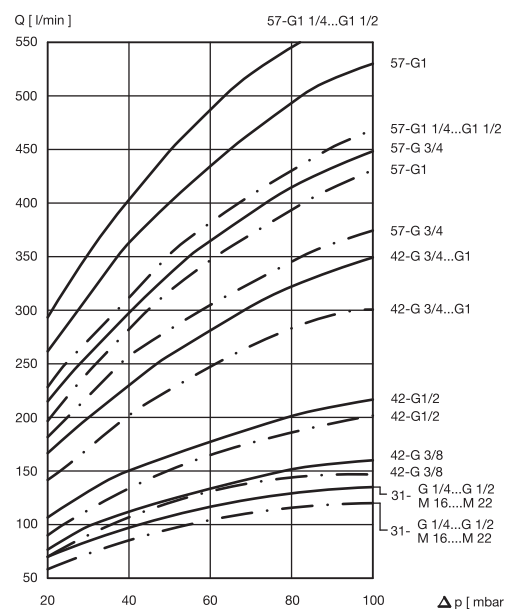

Air flow rate [l/min] in reliance on the pressure difference Δp [mbar] container / outside space
with filter (40 µm): — · —
without filter: ———
Type **with** splash guards (coding 0, 1 and 2)

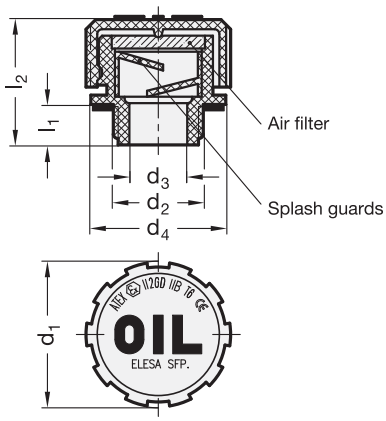

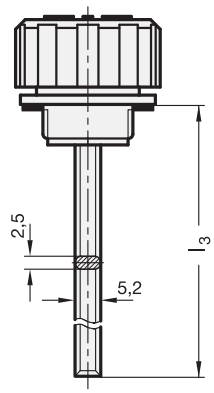

ELESA original code: SFP. ATEX

3 Type

A without dipstick
B* with dipstick

4 Coding

1 with splash guards, no filter
2 with splash guards, with PU filter

1	2					
d_1	d_2	d_3	d_4	l_1	l_2 ≈	l_3
31	G ⅜	10	30	9,5	29,5	188
31	G ½	12	30	9,5	29,5	188
42	G ¾	18	41	11,5	36,5	184

* not availble from stock, requires a minimum order quantity

Specification

- Plastic (Polyamide PA)
  temperature resistant up to 80 °C
- Upper part (cap)
  orange, RAL 2004
- Lower part (threaded part)
  black
- Sealing ring rubber
  NBR (Perbunan)
- Air filter PU-foam
  Polyurethane
  Filtration 40 µm
- Dipstick Steel
  - phosphated
  - Level markings /
    Special lengths GN 109 → *Page 925*
- *Elastomer characteristics → Page 1140*
- *Plastic characteristics → Page 1141*
- RoHS compliant

Information

ATEX-Breather caps GN 552.6 are suitable for use in an explosion risk environment. They comply with the guidelines 94/9/EG.

MAX-MIN lines can easily be marked on the two flat sides of the dipstick (see GN 109 → *Page 925).*

A detailed operating instruction is included.

Function and operational criteria of breather caps see GN 552 → *Page 922.*

How to order		
GN 552.6-31-G½-A-1 (1 2 3 4)	1	d_1
	2	d_2
	3	Type
	4	Coding

Level markings / Special lengths

for oil dipsticks

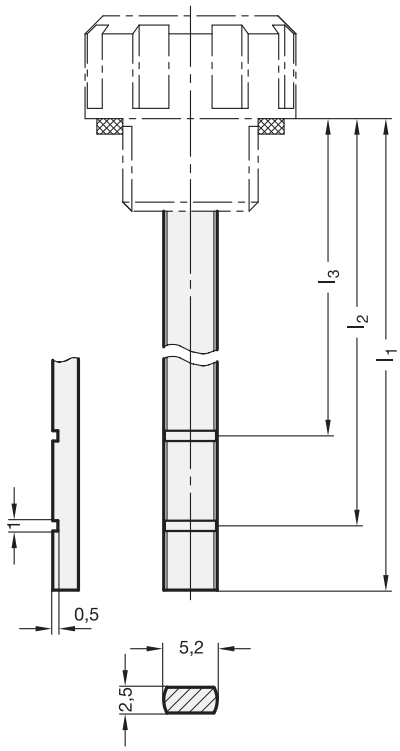

GN 552 / GN 552.6

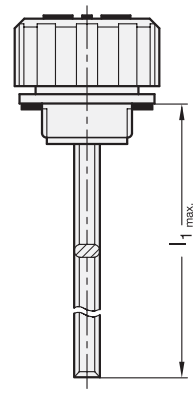

l_1 max. see standard sheets

Information

Level markings and special lengths GN 109 for oil dipsticks are available for the standards shown above. The dipstick is shortened to the length l_1 and the marking notches are milled in at l_2 or l_3 with the effect that they are easily visible. The maximum length l_1 is given in the appropriate standard. The length specifications l_1 to l_3 refer to the contact surface without seal, with a tolerance of ±1 mm to be taken into account. For critical applications and depending on standard, the seal must be taken into consideration with a thickness of as much as 2 mm.

If required, more than 2 notches may be cut which are then specified by the appropriate details on the position (l_4 ... l_x). Also, texts such as MAX / MIN may be laser-engraved in addition to or instead of the notches by submitting the appropriate template.

How to order (without marking notch)			
GN 109-85 (1)	1	l_1 (Length oil dipstick)	Breather caps GN 552-31-M16x1,5-B-2 with oil dipstick in special length **GN 109-85**

How to order (with one marking notch)			
GN 109-110-90 (1 2)	1	l_1 (Length oil dipstick)	Breather caps GN 552-42-G3/4-B-1 with one level marking **GN 109-110-90**
	2	l_2 (Length notch)	

How to order (with two marking notches)			
GN 109-90-80-50 (1 2 3)	1	l_1 (Length oil dipstick)	ATEX-Breather caps GN 552.6-31-G1/2-B-1 with two level markings **GN 109-90-80-50**
	2	l_2 (Length 1st notch)	
	3	l_3 (Length 2nd notch)	

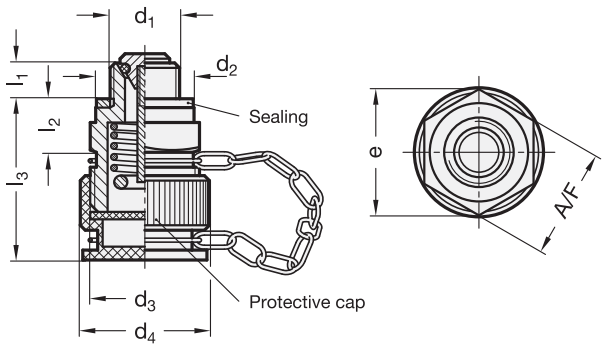

3 Type

K with plastic protective cap and chain

1

d_1 Steel		Brass		d_2	d_3 Connection thread for GN 880.1	d_4	e ≈	l_1	l_2	l_3	A/F
M 14 x 1,5	G ¼	-	-	20	M 22 x 1,5	26	25,4	7,5	10,5	31	22
M 16 x 1,5	-	-	-	22	M 22 x 1,5	26	25,4	7,5	10,5	31	22
-	G ⅜	-	-	23	M 22 x 1,5	26	25,4	7,5	10,5	31	22
M 18 x 1,5	-	-	-	24	M 22 x 1,5	26	25,4	8,5	10,5	31	22
M 20 x 1,5	-	-	-	26	M 22 x 1,5	26	31,2	8,5	10,5	31	27
M 22 x 1,5	-	-	-	27	M 26 x 1,5	30	31,2	8,5	12	32	27
-	G ½	-	-	26	M 26 x 1,5	30	31,2	8,5	12	32	27
-	-	M 24 x 1,5	-	29	M 26 x 1,5	30	34,7	9	12	32	30
-	-	M 26 x 1,5	G ¾	32	M 26 x 1,5	30	37	9	12	32	32
-	-	M 30 x 1,5	-	36	M 26 x 1,5	30	41,6	9	12	32	36
-	-	-	G 1	39	M 26 x 1,5	30	47,3	9	12	32	41

Specification

2

- Valve body
  - Steel **ST**
    zinc plated, blue passivated
  - Brass **MS**
- Valve plate
  - Brass
  - O-ring rubber FPM (Viton®)
- Sealing disc DIN 7603 A
  Copper
- Protective cap
  Plastic (Polyamide PA)
  temperature resistant up to 120 °C
- Chain
  - Steel zinc plated, blue passivated
  - Eye brass
- *Elastomer characteristics → Page 1140*
- RoHS compliant

On request

- other materials
- with Stainless Steel-Cable (instead of chain)

Information

Oil drain valves GN 880 may be used for draining non-pressurised oil. As well also conditionally as for vacuum drainage.

The flow volume (l/min.) depends on the viscosity of the medium, the filling quantity and the temperature. Guidance values available on request.

Other features are:

- easy and safe handling
- optimum flow rate
- high pressure resistance (up to 100 bar)
- high temperature resistance (-30 °C to +160 °C)
- 100 % leak tightness tested
- TÜV and DLG tested

see also...

- *Connector pieces GN 880.1 → Page 928*

How to order		
GN 880-M20x1,5-ST-K (1 = d_1, 2 = Material, 3 = Type)	1	d_1
	2	Material
	3	Type

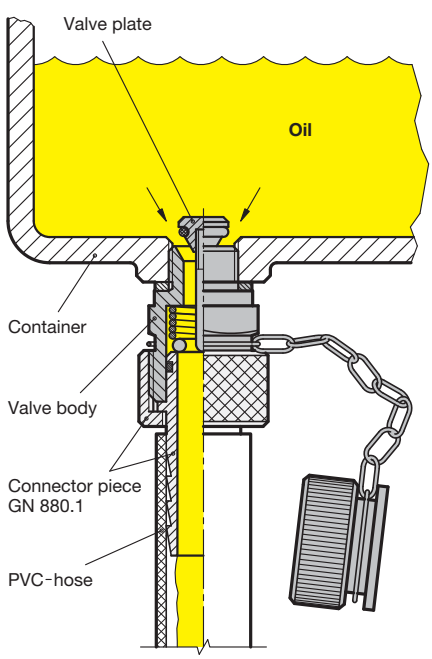

Operation description

After removing the protective cap secured against loss with a chain, turn in the matching connector pieces GN 880.1.

When the connector is screwed in, the valve plate will open and the oil will empty through the hose into a pan.

Take off the connector after the oil has drained. The valve plate will be lowered and closes off the drainage outlet.

The container with the oil drain vale is ready for filling again.

Other benefits of the oil drain valves GN 880:
- No risk of burns caused by hot oil
- No dirt caused by uncontrolled oil drainage
- Quick and easy

Connector pieces

for oil drain valves GN 880

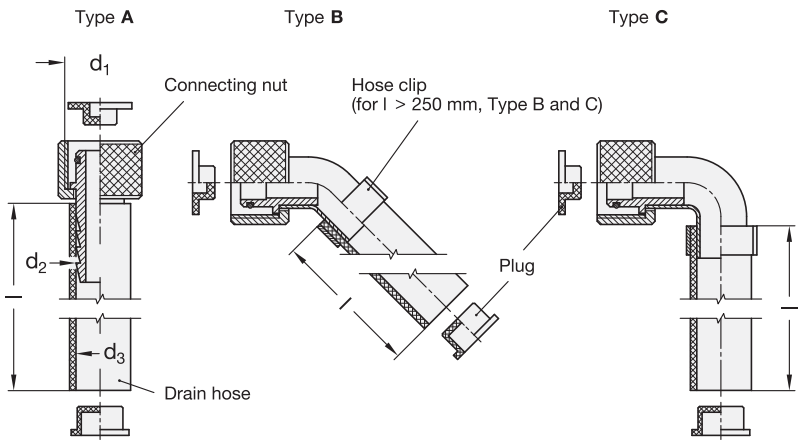

2 Type

- **A** Connector straight
- **B** Connector 45°
- **C** Connector 90°

1 Size	d_1 Connection thread for GN 880	3 Lenght l Hose length			d_2 Nipple	d_3 Nominal width Hose
22	M 22 x 1,5	250	500	1000	15	14
26	M 26 x 1,5	250	500	1000	20	19

Specification

4

- Connecting nut
  with hose liner
  Brass
- L bend 45° / 90°
  Copper
- O-Ring
  Rubber NBR (Perbunan)
- Drain hose
  PVC, transparent **T**
- Hose clip
  Steel, zinc plated
- Plug
  Plastic, LD-PE
- RoHS compliant

On request

- other hose length
- Drain hose with inside webbing (Nylon)

Information

Connector pieces GN 880.1 are needed when using oil drain valves GN 880.

Screwing on the connector piece will activate the valve plate of the oil drain valve, allowing the oil to flow through the hose into a pan held ready.

The plug prevents remaining oil from dripping out after discharging.

see also...
- *Oil drain valves GN 880 → Page 926*

Connector piece without drain hose		
1 2	1	Size
GN 880.1-26-C	2	Type

Connector piece with drain hose		
1 2 3 4	1	Size
	2	Type
GN 880.1-22-A-500-T	3	Length of the hose
	4	Type of the hose

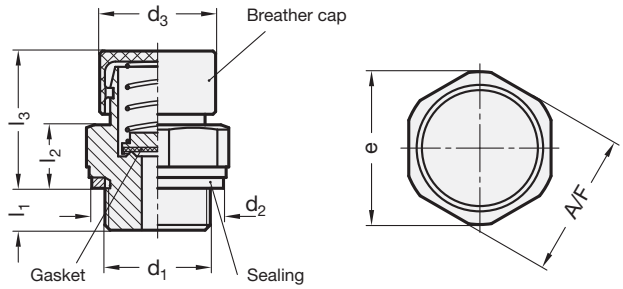

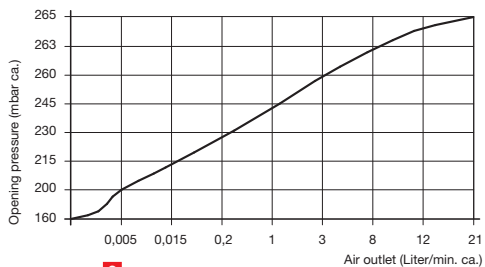

1 d_1		2 Opening pressure in mbar ±20%	d_2	d_3	e ≈	l_1	l_2	l_3	A/F
M 12 x 1,5	-	200	18	22	23,5	8,5	11,5	26,5	22
M 14 x 1,5	G ¼	200	20	22	23,5	8,5	11,5	26,5	22
M 16 x 1,5	-	200	22	22	23,5	8,5	11,5	26,5	22
-	G ⅜	200	23	22	23,5	8,5	11,5	26,5	22
M 18 x 1,5	-	200	24	22	23,5	8,5	11,5	26,5	22
M 20 x 1,5	-	200	26	22	29	8,5	11,5	26,5	27
M 22 x 1,5	-	200	27	22	29	8,5	11,5	26,5	27
-	G ½	200	26	22	29	8,5	11,5	26,5	27
M 24 x 1,5	-	200	29	22	32,5	8	12	27	30
M 26 x 1,5	G ¾	200	32	22	34	8	12	27	32
M 30 x 1,5	-	200	36	22	39	8	12	27	36
-	G 1	200	39	22	44	8	12	27	41

Specification

	4	3
• Valve body Brass		MS
• Breather cap Plastic (Polyamide PA)	K	
• Gasket Brass with silicone-rubber coating (VMQ)		
• Spring Stainless Steel AISI 301		
• Sealing DIN 7603 A Soft iron 1.0338		
• temperature resistant from -30 °C to +100 °C		
• RoHS compliant		

On request

- other materials
- with other opening pressure (20 mbar)
- with dipstick

Information

Once the opening pressure given in the table is exceeded, breather valves GN 881 with gasket will vent into a container and so protect against excessive inside container pressure.

In its normal state, the gasket closes the container and so prevents dirt or dust getting inside the container.

The above diagram shows the air outlet as factor of the opening pressure.

The valves are checked for leak tightness and opening pressure.

How to order

1 2 3 4
GN 881-G½-200-MS-K

1	d_1
2	Opening pressure
3	Material of the valve body
4	Material of the breather cap

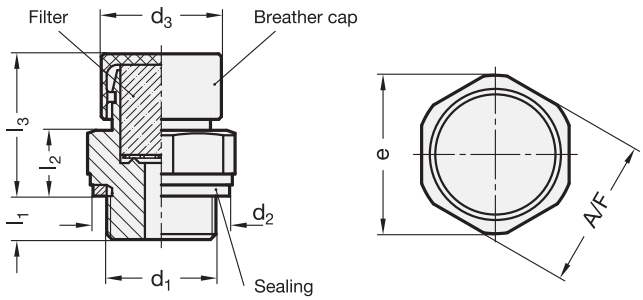

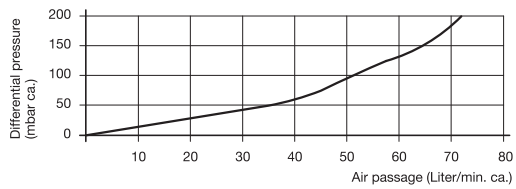

1

d_1		d_2	d_3	e	l_1	l_2	l_3	A/F
M 12 x 1,5	-	18	22	23,5	8,5	11,5	25,5	22
M 14 x 1,5	-	20	22	23,5	8,5	11,5	25,5	22
-	G ¼	20	22	23,5	7,5	10,5	25,5	22
M 16 x 1,5	G ⅜	22	22	23,5	8,5	11,5	25,5	22
M 18 x 1,5	-	24	22	23,5	8,5	11,5	25,5	22
M 20 x 1,5	-	26	22	29	8,5	11,5	25,5	27
M 22 x 1,5	-	27	22	29	8,5	11,5	25,5	27
-	G ½	26	22	29	8	12	26	27
M 24 x 1,5	-	29	22	32,5	8	12	26	30
M 26 x 1,5	G ¾	32	22	34	8	12	26	32
M 30 x 1,5	-	36	22	39	8	12	26	36
-	G 1	39	22	44	8	12	26	41

Specification

	3	2
• Valve body Brass		MS
• Breather cap Plastic (Polyamide PA)	K	
• Air filter - Stainless Steel-Wire mesh AISI 304 - Filter category G2-G3 - Mean separation rate (Am approx. 65 - 85 %, based on a particle size > 10 µm)		
• Sealing DIN 7603 A Soft iron 1.0338		
• temperature resistant from -30 °C to +100 °C		
• RoHS compliant		

Information

Breather filters GN 882 are used when the air exchange is to be allowed between the inside of the container and the ambient air.

The filter prevents air-borne particles (e.g. dust) from being carried from the outside to the inside of the container. It also ensures that e.g. oil particles do not escape to the outside.

The above diagram shows the air passage as factor of the differential pressure.

On request

- other materials
- with dipstick

How to order		
GN 882-M20x1,5-MS-K (1 = M20x1,5, 2 = MS, 3 = K)	1	d_1
	2	Material of the valve body
	3	Material of the breather

Type **A**

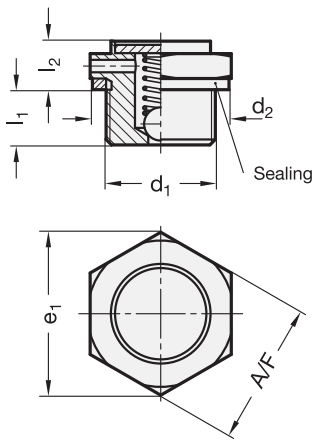

Type **B**

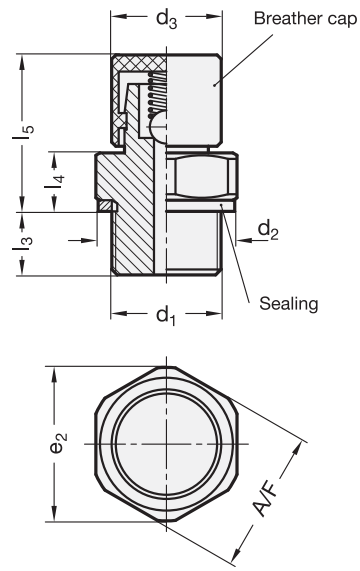

3 Type

A low design
B high design, with plastic cap

1 d_1		2 Opening pressure in mbar		d_2	d_3	e_1	e_2	l_1	l_2	l_3	l_4	l_5	A/F		ca. air passage l/min.	
		min.	max.										Type A	Type B	Type A	Type B
M 10 x 1	-	20	80	17	13	16	18,5	6	6	8	7	18,5	14	17	1,2	1,8
M 10 x 1	-	160	240	17	13	16	18,5	6	6	8	7	18,5	14	17	1,2	1,8
M 12 x 1,5	-	20	80	18	13	19,5	18,5	6,5	6	7,5	7	19	17	17	1,2	1,8
M 12 x 1,5	-	160	240	18	13	19,5	18,5	6,5	6	7,5	7	19	17	17	1,2	1,8
M 14 x 1,5	G ¼	20	80	20	13	19,5	18,5	6,5	6	7,5	7,5	19	17	17	1,2	1,8
M 14 x 1,5	G ¼	160	240	20	13	19,5	18,5	6,5	6	7,5	7,5	19	17	17	1,2	1,8
M 16 x 1,5	-	20	80	22	13	25	24	9	11	7,5	7,5	19	22	22	1,2	1,8
M 16 x 1,5	-	160	240	22	13	25	24	9	11	7,5	7,5	19	22	22	1,2	1,8
-	G ⅜	20	80	23	13	25	24	9	11	7,5	7,5	19	22	22	1,2	1,8
-	G ⅜	160	240	23	13	25	24	9	11	7,5	7,5	19	22	22	1,2	1,8
-	G ½	20	80	26	13	31	29	8,5	11	8	8	19,5	27	27	1,2	1,8
-	G ½	160	240	26	13	31	29	8,5	11	8	8	19,5	27	27	1,2	1,8
-	G ¾	20	80	32	13	37	35	8,5	11	8	8	19,5	32	32	1,2	1,8
-	G ¾	160	240	32	13	37	35	8,5	11	8	8	19,5	32	32	1,2	1,8

Specification

4

- Valve body
  Brass **MS**
- Ball
  Stainless Steel AISI 5210
- Spring
  Stainless Steel AISI 301
- Sealing DIN 7603 A
  Soft iron 1.0338
  (for d_1 = M10 x 1: PA6)
- Breather cap (Type B)
  Plastic
- temperature resistant from -30 °C to +100 °C
- RoHS compliant

Information

Once the opening pressure given in the table is exceeded, breather valves GN 883 will vent into a container and so protect against excessive inside container pressure. They also feature highly compact dimensions.

The simple function principle (pressure spring / ball) ensures long and trouble-free use of the valve acting to one side. The installation position is vertical to the top.

How to order

1 2 3 4
GN 883-G3/8-20-A-MS

1	d_1
2	Opening pressure (min.)
3	Type
4	Material

2.7 Universal joints Fork joints Angled ball joints

2.7 Universal joints, Angled ball joints, Fork joints, Ball joints

DIN 808
Universal joints with friction bearing

→ *Page 938*

GN 808.2
Universal joint shafts with friction bearing

→ *Page 939*

DIN 808
Universal joints with friction bearing
Stainless Steel

→ *Page 940*

DIN 808
Universal joints with needle bearing

→ *Page 942*

GN 808.3
Universal joint shafts with needle bearing

→ *Page 943*

GN 9080
Universal joints
for ordinary applications

→ *Page 944*

GN 808.1
Gaiters
for universal joints

→ *Page 945*

GN 648.1
Ball joint heads with female thread

→ *Page 948*

GN 648.2
Ball joint heads with threaded bolt

→ *Page 949*

GN 648.5
Ball joint heads with female thread
Stainless Steel

→ *Page 950*

GN 648.6
Ball joint heads with threaded bolt
Stainless Steel

→ *Page 951*

GN 751
Fork joints
Fork heads
DIN 71752

→ *Page 952*

GN 751
Fork joints
Fork heads
DIN 71752
Aluminium

→ *Page 954*

GN 751
Fork joints
Fork heads
DIN 71752
Stainless Steel

→ *Page 955*

GN 752
Joint pieces
Steel,
Stainless Steel

→ *Page 956*

GN 782
Ball joints

→ *Page 957*

DIN 71802
Angled ball joints
Steel,
Stainless Steel

→ *Page 958*

GN 710
Dust caps
for angled ball joints
DIN 71802

→ *Page 960*

GN 240
Quick-fit couplings

→ *Page 961*

GN 240.1
Quick-fit couplings

→ *Page 962*

GN 240.2
Quick-fit couplings

→ *Page 963*

Stainless Steel | Ergostyle | Softline | Cleanline | Sanline | ATEX | ESD | Inch

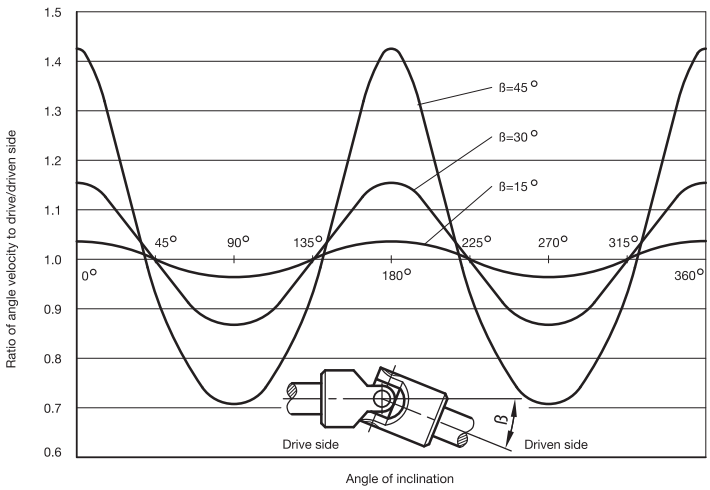

The single universal joints transfer the initial smooth rotation as an irregular rotation. One revolution of the drive shaft via single universal joint will cause the driven shaft to accelerate and decelerate twice. The extent of the irregularity depends on the operating angle ß.

In order to obtain a smooth rotation of the driven shaft two single or one double universal joint is required. In such cases where minor irregularities in the movement are acceptable or where minor operating angles are the norm a single universal joint will do.

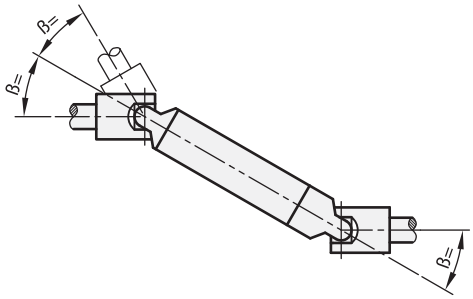

For a smooth transfer of a rotating speed, the angle of inclination ß must be equal at both ends of the connecting shaft.

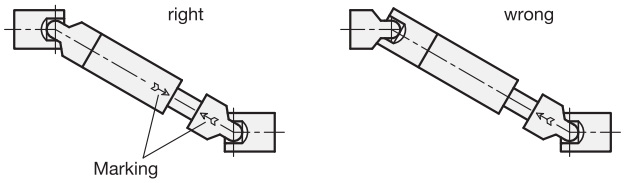

Due to a misconnection of the universal joint shafts, the irregular rotation of each joint is not compensated, but strengthened. This allows joint bearings and wedge profiles to be destroyed. For this reason, the markings of the universal joint shaft halves have to be opposite to each other.

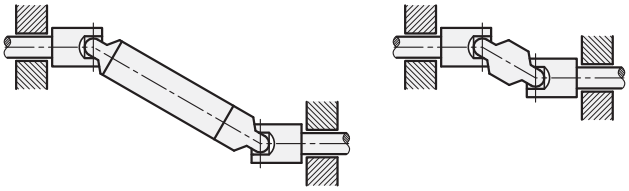

Furthermore the bearings must be as close as possible to the universal joints.

For continuous operation of universal joints with friction bearings adequate lubrication is essential. If drip lubrication is not possible they should be lubricated at least once a day. It is also possible to fit the universal joint with a gaiter GN 808.1 which can be filled with oil or grease.

Universal joints with friction bearing, Type EG

Selection of the size

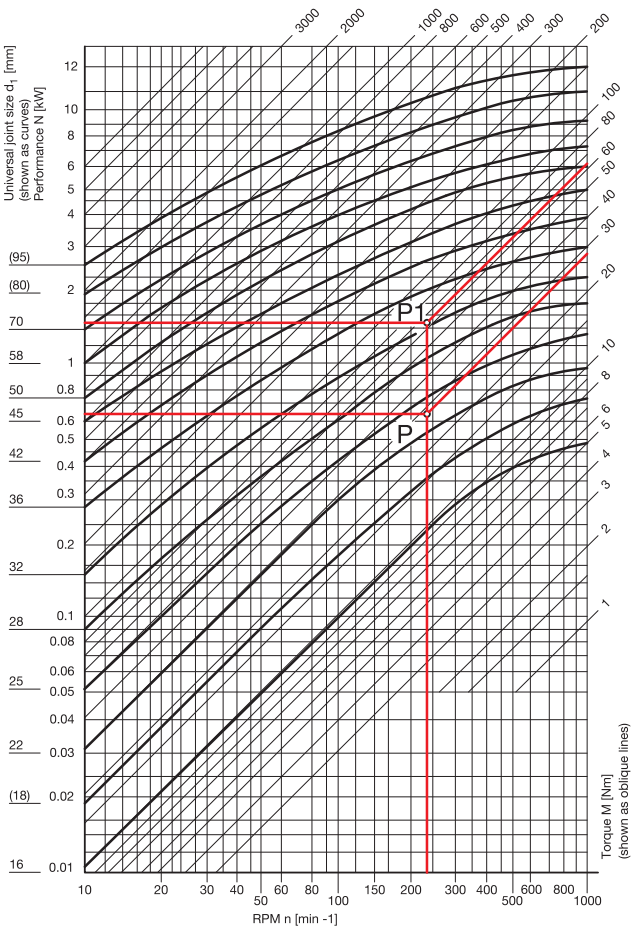

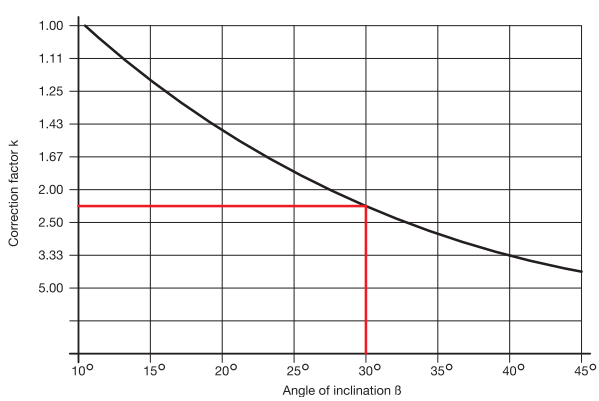

The table shows the transferable output N and/or torques M of universal joints DIN 808, type EG (single friction bearing) in relation to the r.p.m. n.

The values are only applicable to a constant speed of rotation, constant load and an operating inclination angle of max. 10°. They are not applicable to universal joints in Stainless Steel.

For larger inclination angles ß a nominal output N increased by the correction coefficient k and/or a nominal torque M has to be selected (see example below).

Conversion formulae:

$$\text{Torque M [Nm]} = 9550 \frac{\text{N [kW]}}{\text{n [min}^{-1}\text{]}}$$

$$\text{Output N [kW]} = \frac{\text{M [Nm] x n [min}^{-1}\text{]}}{9550}$$

1 kW = 1,36 PS 1 PS = 0,736 kW

Example 1

Output to be transferred N = 0,65 kW
R.p.m. n = 230 min^{-1}
Angle of inclination ß = 10°

Correction coefficient k = 1
Indicative output N‘ = Nominal output N

Intersection point P is arrived at from 0,65 kW and 230 min^{-1} (which corresponds to a torque of 27 Nm).

The next size up universal joint corresponding to point P is the model with a diameter d_1 = 25.

Example 2

Torque to be transferred M = 27 Nm
R.p.m. n = 230 min^{-1}
Angle of inclination ß = 30°

Correction coefficient k = 2,25
Indicative torque = 2,25 x 27 Nm = 60 Nm

Intersection point P_1 is arrived at from 61 Nm and 230 min^{-1} (which is equivalent to an indicative output N = 1,47 kW).

The next size up universal joint corresponding to P_1 is the model with a diameter d_1 = 32.

Universal joints with needle bearing, Type EW

Selection of the size

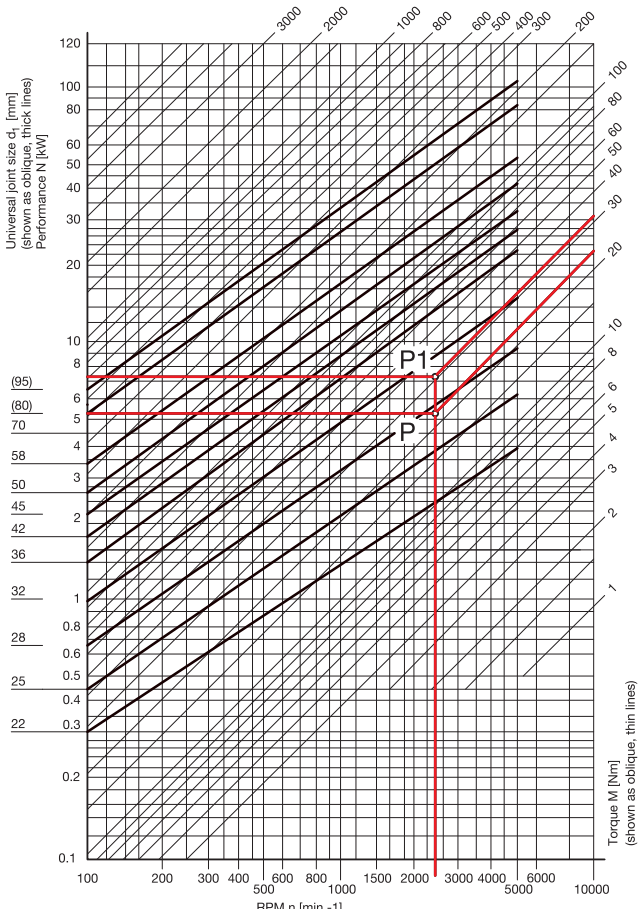

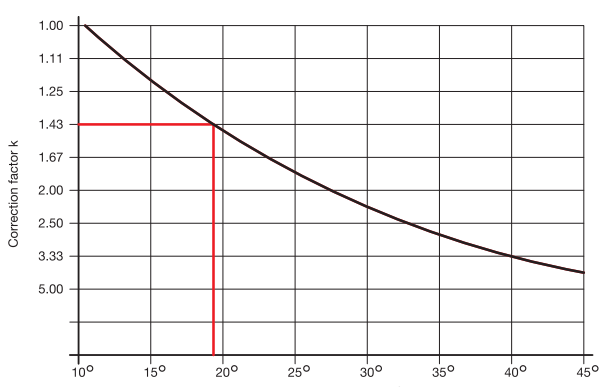

The table shows the transferable output N and/or torques M of universal joints Kreuzgelenken DIN 808, type EW (single needle bearing) in relation to the r.p.m. n.

The values are only applicable to a constant speed of rotation, constant load and an operating inclination angle of max. 10°.

For larger inclination angles ß a nominal output N increased by the correction coefficient k and/or a nominal torque M has to be selected (see example below).

Conversion formulae:

$$\text{Torque M [Nm]} = 9550 \frac{N\,[kW]}{n\,[min^{-1}]}$$

$$\text{Output N [kW]} = \frac{M\,[Nm] \times n\,[min^{-1}]}{9550}$$

1 kW = 1,36 PS 1 PS = 0,736 kW

Example 1

Torque to be transferred N = 5,5 kW
R.p.m. n = 2300 min^{-1}
Angle of inclination ß = 10°

Correction coefficient k = 1
Indicative output N = Nominal output N

Intersection point P is arrived at from 5,5 kW and 2300 min^{-1} (which corresponds to a torque of 23 Nm).

The next size up universal joint corresponding to point P is the model with a diameter d_1 = 28.

Example 2

Torque to be transferred M = 23 Nm
R.p.m. n = 2300 min^{-1}
Angle of inclination ß = 18°

Correction coefficient k = 1,43
Indicative torque = 1,43 x 23 Nm = 33 Nm

Intersection point P_1 is arrived at from 33 Nm and 2300 min^{-1} (which is equivalent to an indicative output N = 7,9 kW).

The next size up universal joint corresponding to P1 is the model with a diameter d_1 = 32.

Universal joints with friction bearing

single or double

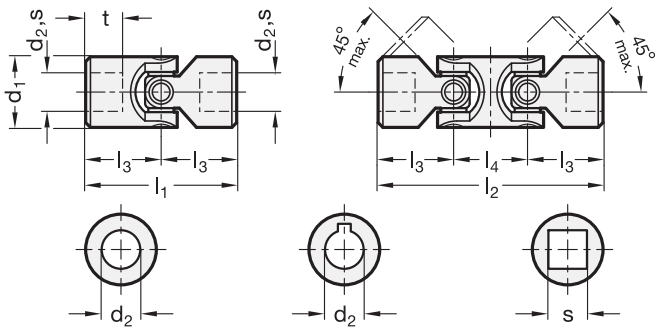

2 Bore code

B without keyway
K with keyway (from d_2=10)
V with square

5 Type

EG single, friction bearing
DG double, friction bearing

1 d_1	3 d_2 H7 Bore	3 s H10 Square	4 l_1 Type EG	4 l_2 Type DG	l_3	l_4	t min.	
16	6	V 6*	34	56	17	22	8	Permissible r.p.m. and torque → *Page 936*
16	8	V 8*	40	62	20	22	11	
16	10	V 8*	52	74	26	22	14	
22	10	V 10*	48	74	24	26	12	
22	12	V 10*	62	88	31	26	18	
25	12	V 12*	56	86	28	30	13	
25	16	V 12*	74	104	37	30	21	
28	14	V 14*	60	96	30	36	13	
32	16	V 16*	68	104	34	36	16	
32	20	V 16*	86	124	43	38	24	
36	18	V 18*	74	114	37	40	17	
42	20	V 20*	82	128	41	46	18	
42	25	V 20*	108	156	54	48	31	
45	22	V 22*	95	145	47,5	50	22	
50	25	V 25*	108	163	54	55	26	
50	30	V 25*	132	188	66	56	38	
58	30	V 30*	122	190	61	68	29	
58	32	V 30*	130	198	65	68	33	
70*	35	V 35	140	212	70	72	35	

* not availble from stock, requires a minimum order quantity

Specification

- Steel
  blank
- Joint bearing areas / pins / bearing sleeves
  case hardened
- *Keyway JS9 DIN 6885 → Page 1124*
- *Cross holes GN 110 → Page 1127*
- *ISO-Fundamental Tolerances → Page 1132*
- RoHS compliant

On request

- with other or unequal bores

Information

The permissible r.p.m. of universal joints with friction bearing DIN 808 is to a large extent dependent on the type of application such as load, duration, angular disposition as well as lubrication → *Page 936*. For over 1000 r.p.m. universal joints with needle bearing should be used → *Page 942*.

For continuous use ample lubrication is essential. This achieved by fitting the joint with a grease filled gaiter GN 808.1 → *Page 945*.

How to order

DIN 808-25-B16-74-EG (1 2 3 4 5)

1	d_1
2	Bore code
3	d_2 (s)
4	l_1 (l_2)
5	Type

Universal joint shafts with friction bearing

with longitudinal compensation

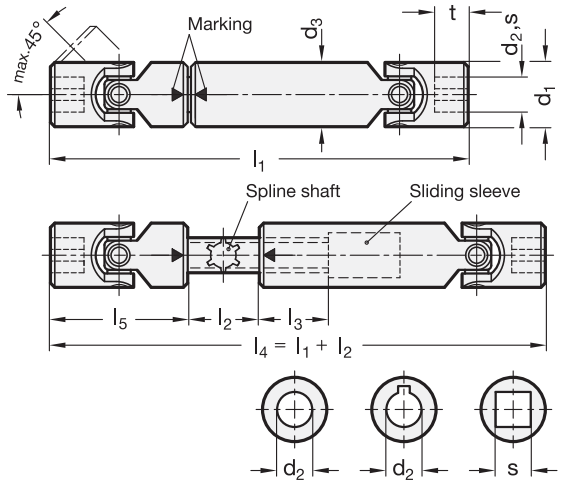

2 Bore code

- **B** without keyway
- **K** with keyway
- **V** with square

1 d_1	3 d_2 H7 Bore		3 s H11 Square	4 l_1 - l_2				d_3	l_3 Guide length	l_5	t min.	
22	K 10	B 10*	V 10*	140-30	160- 40	180- 60	-	22	30	48	12	Permissible r.p.m. and torque → Page 936
22*	K 12	B 12	-	140-30	160- 40	180- 60	-	22	30	62	18	
25	K 12	B 12*	V 12*	160-30	180- 45	200- 70	250-105	26	40	56	13	
25*	K 16	B 16	-	160-30	180- 45	200- 70	250-105	26	40	74	21	
28	K 14	B 14*	V 14*	170-30	200- 60	220- 80	280-140	29	40	60	13	
32	K 16	B 16*	V 16*	190-30	240- 80	275-115	380-210	32	40	68	16	
32*	K 20	B 20	-	190-30	240- 80	275-115	380-210	32	40	86	24	
36	K 18	B 18*	V 18*	230-50	270-100	290-110	400-220	37	40	74	17	
42	K 20	B 20*	V 20*	250-50	320-120	420-220	-	42	45	82	18	
42*	K 25	B 25	-	250-50	320-120	420-220	-	42	45	108	31	
45	K 22	B 22*	V 22*	270-50	330-100	470-240	-	47	50	95	22	
50	K 25	B 25*	V 25*	295-50	350-100	420-170	-	52	50	108	26	
50*	K 30	B 30	-	295-50	350-100	420-170	-	52	50	132	38	
58	K 30	B 30*	V 30*	330-50	400-110	-	-	58	60	122	29	

* not availble from stock, requires a minimum order quantity

Specification

- Steel blank
- Joint bearing areas / pins / bearing sleeves case hardened
- *Keyway JS9 DIN 6885 → Page 1124*
- *Cross holes GN 110 → Page 1127*
- *ISO-Fundamental Tolerances → Page 1132*
- RoHS compliant

On request

- different lengths l_1 - l_2
- with other or unequal bores

Information

Universal joint shafts with friction bearing GN 808.2 do not only bridge the misaligenment of two shafts, but at the same time they offer a length compensation. The power transmission is achiev-bed by two universal joints DIN 808 (type EG) a splined shaft and a sliding sleeve.

It is important to check the accuracy when connec-ting the splined shaft to the sliding sleeve.
The markings → ← have to be opposite to each other. Any kind of misconnection leads to an inhomogeneous output and to a quick abrasion.

How to order

GN 808.2-50-K 25-350-100 (1 2 3 4)

1	d_1
2	Bore code
3	d_2 (s)
4	l_1 - l_2

Stainless Steel-Universal joints with friction bearing

single or double

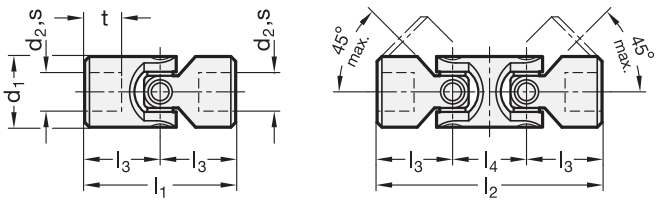

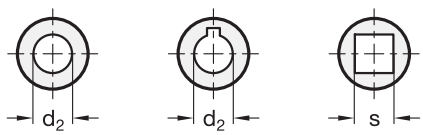

Inox Stainless Steel

2 Bore code

B without keyway
K with keyway (from d_2=10)
V with square

5 Type

EG single, friction bearing
DG double, friction bearing

1 d_1	3 d_2 H7 Bore	3 s H10 Square	4 l_1 Type EG	4 l_2 Type DG	l_3	l_4	t min.
16	6	V 6*	34	56	17	22	8
16	8	V 8*	40	62	20	22	11
22	10	V 10*	48	74	24	26	12
25	12	V 12*	56	86	28	30	13
32	16	V 16*	68	104	34	36	16
42	20	V 20*	82	128	41	46	18
50	25	V 25*	108	163	54	55	26

* not availble from stock, requires a minimum order quantity

Specification

6

- Stainless Steel AISI 304 **NI**
- *Keyway JS9 DIN 6885 → Page 1124*
- *Cross holes GN 110 → Page 1127*
- *ISO-Fundamental Tolerances → Page 1132*
- *Stainless Steel characteristics → Page 1144*
- RoHS compliant

On request

- with other or unequal bores

Information

Since the moveable parts are not surface treated, i.e. not case hardened, the possibilities of application of these universal joints are much more limited compared to the ones made of standard steel. Therefore, the guide lines for the selection of universal joints with friction bearing → *Page 938* according to the diagram may be applied at **a limited extent only**. Rotational speeds over 200 min may become critical.

For continuous use of the Stainless Steel-Universal joints, ample lubrication is very important. This achieved by fitting the joint with a grease filled gaiter GN 808.1 → *Page 945*.

The order example refers to universal joints with equal bores both ends d_2 and s.

How to order

1 2 3 4 5 6
DIN 808-32-B 16-104-DG-NI

1	d_1
2	Bore code
3	d_2 (s)
4	l_2 (l_1)
5	Type
6	Material

Universal joint shafts with longitudinal compensation
with friction bearing GN 808.2 → *Page 939*
with needle bearing GN 808.3 → *Page 943*

Universal joints with needle bearing

single or double

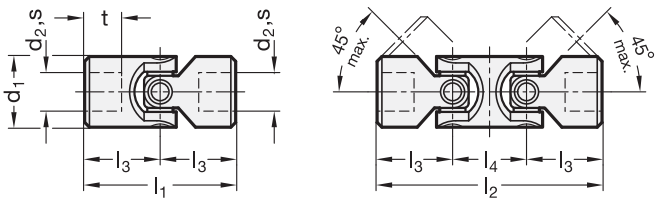

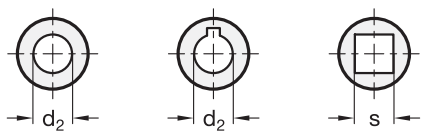

2 Bore code

B without keyway
K with keyway
V with square

5 Type

EW single, needle bearing
DW double, needle bearing

1 d_1	3 d_2 H7 Bore	3 s H10 Square	4 l_1 Type EW	4 l_2 Type DW	l_3	l_4	t min.	
22	10	V 10*	48	74	24	26	12	Permissible r.p.m. and torque → *Page 937*
22	12	V 10*	62	88	31	26	18	
25	12	V 12*	56	86	28	30	13	
25	16	V 12*	74	104	37	30	21	
28	14	V 14*	60	96	30	36	13	
32	16	V 16*	68	104	34	36	16	
32	20	V 16*	86	124	43	38	24	
36	18	V 18*	74	114	37	40	17	
42	20	V 20*	82	128	41	46	18	
42	25	V 20*	108	156	54	48	31	
45	22	V 22*	95	145	47,5	50	22	
50	25	V 25*	108	163	54	55	26	
50	30	V 25*	132	188	66	56	38	
58	30	V 30*	122	190	61	68	29	
58	32	V 30*	130	198	65	68	33	
70*	35	V 35	140	212	70	72	35	

* not availble from stock, requires a minimum order quantity

Specification

- Steel
  blank
- Joint bearing areas, pins
  case hardened
- *Keyway JS9 DIN 6885 → Page 1124*
- *Cross holes GN 110 → Page 1127*
- *ISO-Fundamental Tolerances → Page 1132*
- RoHS compliant

On request

- with other or unequal bores

Information

The permissible r.p.m. of universal joints with needle bearings DIN 808 is higher than for those with friction bearings, but is still dependent on the load, duration of use as well as angular disposition. Ideal applications allow speeds of up to 4000 r.p.m → *Page 937.*

Needle bearings give the universal joints at 3° to 5° angular disposition a considerably higher degree of efficiency than those fitted with friction bearings. The needle bearings have a permanent lubrication and thus do not require servicing. Infomation regarding the selection of universal joints with needle bearing.

How to order

1 2 3 4 5
DIN 808-50-B 25-163-DW

1	d_1
2	Bore code
3	d_2 (s)
4	l_2 (l_1)
5	Type

Universal joint shafts with needle bearing

with longitudinal compensation

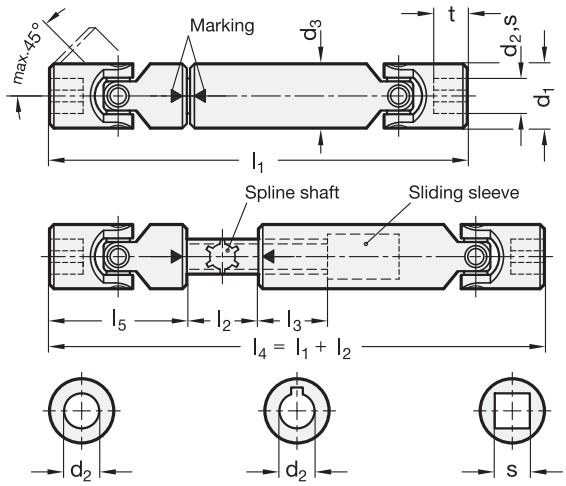

2 Bore code

- **B** without keyway
- **K** with keyway
- **V** with square

1 d_1	3 d_2 H7 Bore		3 s H11 Square	4 l_1 - l_2				d_3	l_3 Guide length	l_5	t min.	
22	K 10	B 10*	V 10*	140-30	160- 40	180- 60	-	22	30	48	12	Permissible r.p.m. and torque → Page 937
22*	K 12	B 12	-	140-30	160- 40	180- 60	-	22	30	62	18	
25	K 12	B 12*	V 12*	160-30	180- 45	200- 70	250-105	26	40	56	13	
25*	K 16	B 16	-	160-30	180- 45	200- 70	250-105	26	40	74	21	
28	K 14	B 14*	V 14*	170-30	200- 60	220- 80	280-140	29	40	60	13	
32	K 16	B 16*	V 16*	190-30	240- 80	275-115	380-210	32	40	68	16	
32*	K 20	B 20	-	190-30	240- 80	275-115	380-210	32	40	86	24	
36	K 18	B 18*	V 18*	230-50	270-100	290-110	400-220	37	40	74	17	
42	K 20	B 20*	V 20*	250-50	320-120	420-220	-	42	45	82	18	
42*	K 25	B 25	-	250-50	320-120	420-220	-	42	45	108	31	
45	K 22	B 22*	V 22*	270-50	330-100	470-240	-	47	50	95	22	
50	K 25	B 25*	V 25*	295-50	350-100	420-170	-	52	50	108	26	
50*	K 30	B 30	-	295-50	350-100	420-170	-	52	50	132	38	
58	K 30	B 30*	V 30*	330-50	400-110	-	-	58	60	122	29	

* not availble from stock, requires a minimum order quantity

Specification

- Steel
  blank
- Joint bearing areas, pins
  case hardened
- *Keyway JS9 DIN 6885 → Page 1124*
- *Cross holes GN 110 → Page 1127*
- *ISO-Fundamental Tolerances → Page 1132*
- RoHS compliant

On request

- different length l_1 - l_2
- with other or unequal bores

Information

Universal joint shafts with needle bearing GN 808.3 do not only bridge the misaligenment of two shafts, but at the same time they offer a length compensation. The power transmission is achive-bed by two universal joints DIN 808 (type EW) a splined shaft and a sliding sleeve.

It is important to check the accuracy when connecting the splined shaft to the sliding sleeve.

The markings → ← have to be opposite to each other. Any kind of mis-connection leads to an inhomogeneous output and to a quick abrasion.

How to order

1 2 3 4
GN 808.3-32-K16-240-80

1	d_1
2	Bore code
3	d_2 (s)
4	l_1 - l_2

Universal joints

for ordinary applications

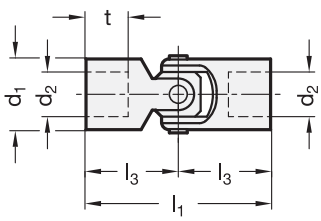

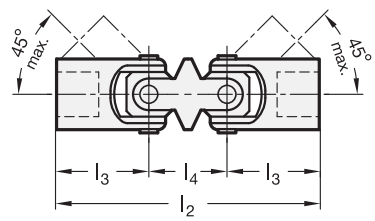

3 Type

EG single, friction bearing
DG double, with friction bearing

1 d_1	2 d_2 H8 Bore	l_1 Type EG	l_2 Type DG	l_3	l_4	t	max. torque in Nm
13	B 8	42	60	21	18	12	2
16	B 10	52	74	26	22	15	3
20	B 12	62	88	31	26	18	6
25	B 16	74	104	37	30	22	12
32	B 20	86	124	43	38	25	24

Specification

- Steel
  - not hardened
  - blackened
- *Cross holes GN 110 → Page 1127*
- *ISO-Fundamental Tolerances → Page 1132*
- RoHS compliant

Information

Universal joints GN 9080 are a simple and very competitively priced variant.

They can only be used for applications with low revolutions. Typical applications are all types of manual operations such as the adjustment of louvers.

How to order		
GN 9080-20-B12-EG (1 2 3)	1	d_1
	2	d_2
	3	Type

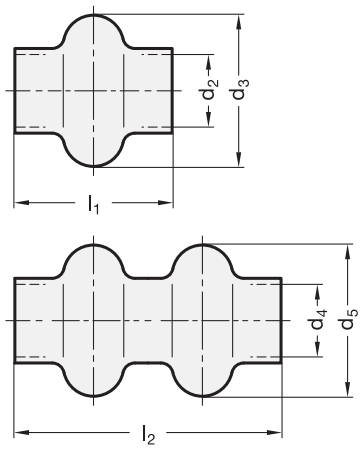

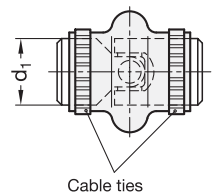

2 Type

E for single joints
D for double joints

1

d_1 Joint-Ø	d_2 Type E	d_3 Type E	d_4 Type D	d_5 Type D	l_1 Type E	l_2 Type D
16	15	28	16	35	34	55
22	20,5	40	20	36	45	65
25	24,5	48	24	44	50	70
28	27,5	52	28	51	56	80
32	30,5	56	32	62	65	90
36	35,5	66	-	-	72	-
42	40	75	40	73	82	120
45	45	84	-	-	95	-
50	50	92	50	90	108	155
58	56	100	-	-	122	-

Specification

2

- Type E — **E**
  Rubber (CR)
  black
- Type D — **D**
  Elastomer plastic
  smooth PVC
  black
- *Elastomer charasteristics* → *Page 1140*
- RoHS compliant

Information

Gaiters GN 808.1 give universal joints full protection against ingress of dirt.

At the same time they can be filled with grease which gives long term lubrication for friction bearings.

The gaiters are secured at each end with two cable ties, which are supplied each sleeve.

How to order		
GN 808.1-25-E (1 2)	1	d_1
	2	Type

Features of general use:

Steel-Specification

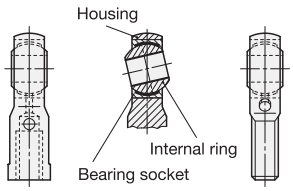

Type **N**
Housing steel, zinc plated
Pairings
Internal ring steel, hardened
Bearing socket brass
lubrication possible.

For general use, and in particular for continuously changing thrst and shock loads ind radial and axial plane.

Type **W**
Housing steel, zinc plated
Pairings
Internal ring steel, hardened
Bearing socket steel, zinc plated with PTFE-insert
self lubricated.

For general use, especially for application nder dynamic operating conditions.
Load bearing capacitiy than Type **N**.

Stainless Steel-Specification

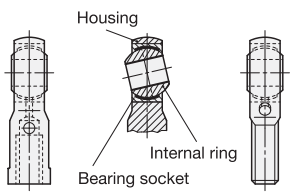

Type **NH**
Housing Stainless Steel
Pairings
Internal ring, hardened, hard chrome plated
Bearing socket bronze
lubrication possible.

As Type **N**
for use in corrosion endangered area.

Type **WH**
Housing Stainless Steel
Pairings
Internal ring steel, hardened
Bearing socket bronze, with PTFE-insert
self lubricated.

As Type **W**
for use in corrosion endangered area.

Type **WK**
Housing Stainless Steel
Pairings
Internal ring Stainless Steel, hardened
Bearing socket Stainless Steel, with PTFE-insert
self lubricated.

As Type **W**
for use in areas where the highest degree of corrosion resistance is of paramount importance. Such as for instance in the food industry.

Bearing play

Bearing play refers to the amount of play by which the internal ring inside a bearing socket without lubrication can be moved either a radial or an axial plane.

Types **N**, **NH** lubrication possible		Types **W**, **WH**, **WK** self lubricated		
d_1 Bore internal ring	Radial bearing play	d_1 Bore internal ring	Radial bearing play	Axial bearing play
5 ... 10	0,005 ... 0,035	5 ... 10	0,005 ... 0,030	2 to 3 times radial play
12 ... 20	0,010 ... 0,040	12 ... 18	0,005 ... 0,035	
22 ... 30	0,010 ... 0,050	20 ... 30	0,005 ... 0,055	

Load applied to obtain the measured results: 100 N at room temperature.

Lubrication

Ball joint heads of type **N** (lubrication possible) require regular lubrication. On delivery the ball joint heads are not lubricated. The initial lubrication takes place when installed. Within the temperature range of -20 °C to +125 °C, a multipurose grease proved to be adequate. Under extreme conditions a high quality grease such as for instance Gleitmo 805 K should be used. Ball joint heads of the type **W** (self lubricated) **must never be lubricated**. The internal ring moves on a PTFE-insert of the bearing socket.

Operating temperature

Ball joint heads of the type **N** (lubrication possible) can be used within the temperature range -50 °C to +200 °C and if use with a high temperature grease even higher. Ball joint heads of the type **W** (self lubricated) can be used in the temperature range of -50 °C bis +200 °C. In general use at higher temperature is possible, but this will of course shorten the working life of the head.

Load values

Load values are bearing related values, arrived at from the raw material data of the basic material of construction used. The latter is used to determine the choice of a ball joint head for a given load. These might, however, have to be reduced to meet the requirements of particular circumstances.

Static load values Co in kN

Co gives the permitted radial static load which can be applied to a ball joint head with the weakest cross section without causing permanent deformation. The Co-values quoted in the catalogue table have been calculated, based on the corresponding raw material specification. Subsequently a random number of the ball joint heads was stress tested at room temperature. Each and every time the stress tests were based on using up to 80 % before the onset of deformation thus leaving a safety factor of 1,25. The static value Co is used to obtain the permissible **axial load** which in general is limited by the mounting strength of the internal bearing. To obtain the maximum axial load Fa tests were carried out at the largest permissible slant angle and the results obtained are shown in the table below:

Fa = 0,4 Co for type N

Fa = 0,2 Co for types NH, W, WH, WK

Dynamic load value C in kN

They help to evaluate the length of life for ball joint heads when use under dynamic conditions.

d_1 Size	static load rating Co GN 648.1 Type N	static load rating Co GN 648.2 Type N	dynamic load rating C GN 648.1/.2 Type N	static load rating Co GN 648.1 Type W	static load rating Co GN 648.2 Type W	dynamic load rating C GN 648.1/.2 Type W	static load rating Co GN 648.5 Type NH/WH/WK	static load rating Co GN 648.6 Type NH/WH/WK	dynamic load rating C GN 648.5/.6 Type N	dynamic load rating C GN 648.5/.6 Type W
5	9,9	4,3	2,5	8	4,3	7,5	11,8	6,2	3,3	7,5
6	11,9	6	3,2	8,9	6	9,3	13,1	8,8	4,3	9,3
8	17,1	11	5,4	14,1	11	16,7	20,7	16,1	7,1	16,7
10	21,4	17,4	7,5	19,3	17,4	23,4	28,3	25,5	10	23,4
12	27	25,5	10	23,5	23,5	32	34,5	34,5	13,5	32
14	24,5	24,5	13	21	21	42	39,5	39,5	17	42
16	37	36,5	16	32	32	52,5	60,5	60,5	21,5	52,5
18	43	43	19,5	38,5	38,5	64	73	73	26	64
20	49,5	49,5	23,5	44	44	78	83	83	31,5	78
22	57	57	29	53	53	97	100	100	38	97
25	68	68	35	62	61	122	118	118	47	122
30	82	82	64	82	82	168	155	155	64	168

Ball joint heads with female thread

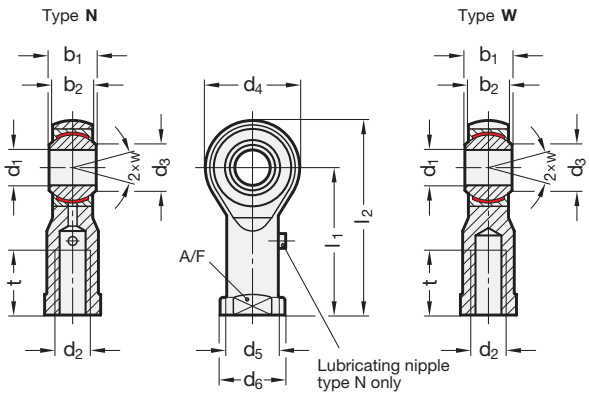

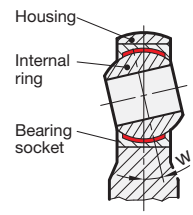

3 Type (pairings)

N Brass / Steel
lubrication possible

W Steel-PTFE / Steel
self lubricated

1 d_1 H7	2 d_2	Left hand thread	CETOP-connector dimensions	b_1 –0,12	b_2	d_3	d_4	d_5	d_6	l_1	l_2	sw	t	w Movement angle
5	M 5	M 5L	M 4	8	6	7,7	18	9	11	27	36	9	10	13°
6	M 6	M 6L	-	9	6,75	8,9	20	10	13	30	40	11	12	13°
8	M 8	M 8L	-	12	9	10,4	24	12,5	16	36	48	13	16	14°
10	M 10	M 10L	M 10 x 1,25	14	10,5	12,9	28	15	19	43	57	17	20	13°
12	M 12	M 12L	M 12 x 1,25	16	12	15,4	32	17,5	22	50	66	19	22	13°
14	M 14	M 14L	-	19	13,5	16,8	36	20	25	57	75	22	25	16°
16	M 16	M 16L	M 16 x 1,5	21	15	19,3	42	22	27	64	85	22	28	15°
18	M 18 x 1,5	M 18 x 1,5L	-	23	16,5	21,8	46	25	31	71	94	27	32	15°
20	M 20 x 1,5	M 20 x 1,5L	-	25	18	24,3	50	27,5	34	77	102	32	33	14°
22	M 22 x 1,5	M 22 x 1,5L	-	28	20	25,8	54	30	37	84	111	32	37	15°
25	M 24 x 2	M 24 x 2L	-	31	22	29,6	60	33,5	42	94	124	36	42	15°
30*	M 30 x 2	M 30 x 2L	-	37	25	34,8	70	40	51	110	145	41	51	17°

* only available in type W

Specification

- Housing Steel
  - zinc plated, blue passivated
  - d_1 = 5 up to 12: machined
  - d_1 = 14 up to 25: forged
- Pairings
  - Type N (lubrication possible)
    Bearing socket
    Brass, CuZn40Al1
    Internal ring
    Steel, 100Cr6
    hardened, ground, polished
  - Type W (self lubricated)
    Bearing socket
    Steel, zinc plated
    with PTFE-Einlage
    Internal ring
    Steel, 100Cr6
    hardened, ground, polished
- *ISO-Fundamental Tolerances → Page 1132*
- RoHS compliant

Information

Ball joint heads GN 648.1 are similar to DIN ISO 12240-4, series K (formerly DIN 648 K).

see also...
- *More information to ball joints as well as load capacity → Page 947*
- *Stainless Steel-Ball joint heads with female thread GN 648.5 → Page 950*

On request

- narrow model (ISO 12240-1, series E)

How to order

GN 648.1-16-M16x1,5-N (1 = 16, 2 = M16x1,5, 3 = N)

1	d_1
2	d_2
3	Type

Ball joint heads with threaded bolt

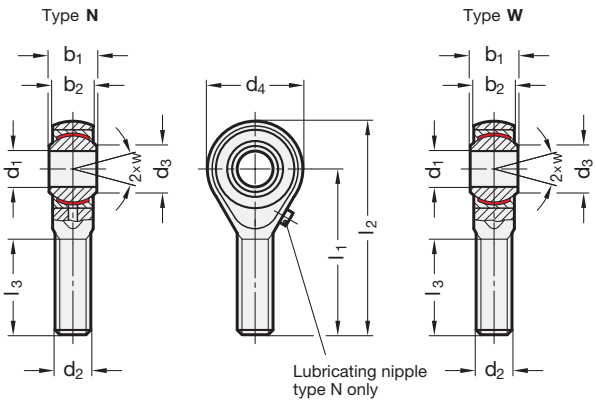

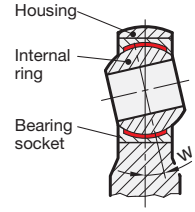

3 Type (pairings)

N Brass / Steel
lubrication possible

W Steel-PTFE / Steel
self lubricated

1 d_1 H7	2 d_2	Left hand thread	b_1 –0,12	b_2	d_3	d_4	l_1	l_2	l_3	w Movement angle
5**	M 5	M 5L	8	6	7,7	18	33	42	20	13°
6	M 6	M 6L	9	6,75	8,9	20	36	46	22	13°
8	M 8	M 8L	12	9	10,4	24	42	54	25	14°
10	M 10	M 10L	14	10,5	12,9	28	48	62	29	13°
12	M 12	M 12L	16	12	15,4	32	54	70	33	13°
14	M 14	M 14L	19	13,5	16,8	36	60	78	38	16°
16	M 16	M 16L	21	15	19,3	42	66	87	40	15°
18	M 18 x 1,5	M 18 x 1,5L	23	16,5	21,8	46	72	95	44	15°
20	M 20 x 1,5	M 20 x 1,5L	25	18	24,3	50	78	103	47	14°
22	M 22 x 1,5	M 22 x 1,5L	28	20	25,8	54	84	111	51	15°
25	M 24 x 2	M 24 x 2L	31	22	29,6	60	94	124	58	15°
30*	M 30 x 2	M 30 x 2L	37	25	34,8	70	110	145	71	17°

* only available in type W ** d_1 = 5 type N no lubrication possible

Specification

- Housing Steel
  - zinc-plated, blue passivated
  - d_1 = 5 up to 12: machined
  - d_1 = 14 up to 25: forged
- Pairings
  - Type N (lubrication possible)
    Bearing socket
    Brass, CuZn40Al1
    Internal ring
    Steel, 100Cr6
    hardened, ground, polished
  - Type W (self lubricated)
    Bearing socket
    Steel, zinc plated
    with PTFE-insert
    Internal ring
    Steel, 100Cr6
    hardened, ground, polished
- *ISO-Fundamental Tolerances → Page 1132*
- RoHS compliant

Information

Ball joint heads GN 648.2 are similar to DIN ISO 12240-4, series K (formerly DIN 648 K).

see also ...
- *More information to ball joints as well as load capacity → Page 947*
- *Stainless Steel-Ball joint heads with threaded bolt GN 648.6 → Page 951*

On request

- narrow model (ISO 12240-1, series E)

How to order

GN 648.2-10-M10L-W (1 = d_1, 2 = d_2, 3 = Type)

Stainless Steel-Ball joint heads with female thread

Type **NH**

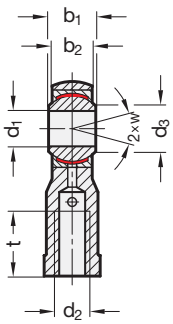

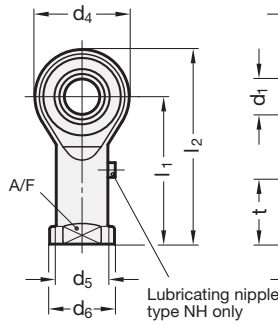

Type **WH**

Type **WK**

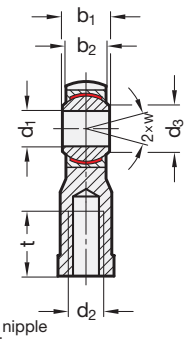

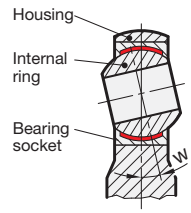

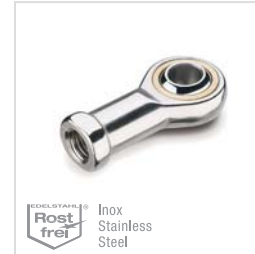

3 Type (Pairings)

NH Bronze / Steel
lubrication possible

WH Bronze-PTFE / Steel
self lubricated

WK Stainless Steel-PTFE / Stainless Steel
self lubricated

1 d_1 H7	2 d_2	Left hand thread	b_1 –0,12	b_2	d_3	d_4	d_5	d_6	l_1	l_2	sw	t	w Movment angle
5	M 5	M 5L	8	6	7,7	18	9	11	27	36	9	10	13°
6	M 6	M 6L	9	6,75	8,9	20	10	13	30	40	11	12	13°
8	M 8	M 8L	12	9	10,4	24	12,5	16	36	48	13	16	14°
10	M 10	M 10L	14	10,5	12,9	28	15	19	43	57	17	20	13°
12	M 12	M 12L	16	12	15,4	32	17,5	22	50	66	19	22	13°
14	M 14	M 14L	19	13,5	16,8	36	20	25	57	75	22	25	16°
16	M 16	M 16L	21	15	19,3	42	22	27	64	85	22	28	15°
18	M 18 x 1,5	M 18 x 1,5L	23	16,5	21,8	46	25	31	71	94	27	32	15°
20	M 20 x 1,5	M 20 x 1,5L	25	18	24,3	50	27,5	34	77	102	32	33	14°
22	M 22 x 1,5	M 22 x 1,5L	28	20	25,8	54	30	37	84	111	32	37	15°
25	M 24 x 2	M 24 x 2L	31	22	29,6	60	33,5	42	94	124	36	42	15°
30	M 30 x 2	M 30 x 2L	37	25	34,8	70	40	51	110	145	41	51	17°

Specification

- Housing Stainless Steel AISI 431 forged, polished
- Pairings
  - Type NH (lubrication possible)
    Bearing socket Bronze CuSn8
    Internal ring Steel 100Cr6 hardened, ground, polished, **hard chrome plated**
  - Type WH (self lubricated)
    Bearing socket Bronze CuSn8 with PTFE-insert
    Internal ring Steel 100Cr6 hardened, ground, polished, **hard chrome plated**
  - Type WK (self lubricated)
    Bearing socket, Stainless Steel AISI 316Ti with PTFE-insert
    Internal ring Stainless Steel AISI 420 hardened, ground, polished
- RoHS compliant

Information

Stainless Steel-Ball joint heads GN 648.5 are similar to DIN ISO 12240-4, series K (formerly DIN 648 K).

see also...

- *More information to ball joint heads as well as load capacity → Page 947*
- *Ball joint heads with female thread GN 648.1 (Steel, zinc plated) → Page 948*

On request

- narrow model (ISO 12240-1, series E)

How to order

GN 648.5-10-M10L-WH (1 – 2 – 3)

1	d_1
2	d_2
3	Type

Stainless Steel-Ball joint heads with threaded bolt

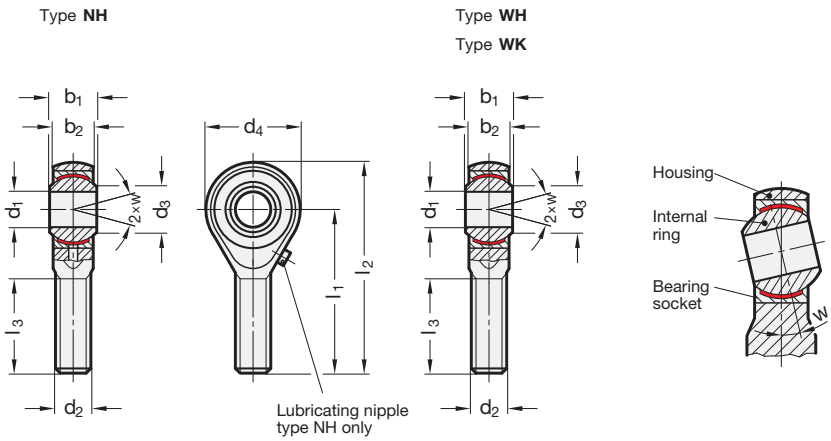

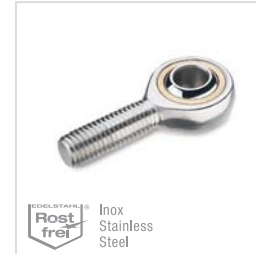

3 Type (Pairings)

NH Bronze / Steel lubrication possible
WH Bronze-PTFE / Steel self lubricated
WK Stainless Steel-PTFE / self lubricated

1 d_1 H7	2 d_2	Left hand thread	b_1 –0,12	b_2	d_3	d_4	l_1	l_2	l_3	w Movement angle
5*	M 5	M 5L	8	6	7,7	18	33	42	20	13°
6	M 6	M 6L	9	6,75	8,9	20	36	46	22	13°
8	M 8	M 8L	12	9	10,4	24	42	54	25	14°
10	M 10	M 10L	14	10,5	12,9	28	48	62	29	13°
12	M 12	M 12L	16	12	15,4	32	54	70	33	13°
14	M 14	M 14L	19	13,5	16,8	36	60	78	38	16°
16	M 16	M 16L	21	15	19,3	42	66	87	40	15°
18	M 18 x 1,5	M 18 x 1,5L	23	16,5	21,8	46	72	95	44	15°
20	M 20 x 1,5	M 20 x 1,5L	25	18	24,3	50	78	103	47	14°
22	M 22 x 1,5	M 22 x 1,5L	28	20	25,8	54	84	111	51	15°
25	M 24 x 2	M 24 x 2L	31	22	29,6	60	94	124	58	15°
30	M 30 x 2	M 30 x 2L	37	25	34,8	70	110	145	71	17°

* d_1 = 5 type N no lubrication possible

Specification

- Housing Stainless Steel AISI 431 forged, polished
- Pairings
  - Type NH (lubrication possible)
    Bearing socket Bronze CuSn8
    Internal ring Steel 100Cr6 hardened, ground, polished, **hard chrome plated**
  - Type WH (self lubricated)
    Bearing socket Bronze CuSn8 with PTFE-insert
    Internal ring Steel 100Cr6 hardened, ground, polished, **hard chrome plated**
  - Type WK (self lubricated)
    Bearing socket, Stainless Steel AISI 316Ti with PTFE-insert
    Internal ring, Stainless Steel AISI 420 hardened, ground, polished
- RoHS compliant

Information

Stainless Steel-Ball joint heads GN 648.6 are similar to DIN ISO 12240-4, series K (formerly DIN 648 K).

see also...
- *More information to ball joint heads as well as load capacity → Page 947*
- *Ball joint heads with threaded bolt GN 648.2 (Steel, zinc plated) → Page 949*

On request

- narrow model (ISO 12240-1, series E)

How to order

GN 648.6-16-M16-NH (1 – 2 – 3)

1	d_1
2	d_2
3	Type

Fork joints

Fork head DIN 71752, Steel

Fork head DIN 71752

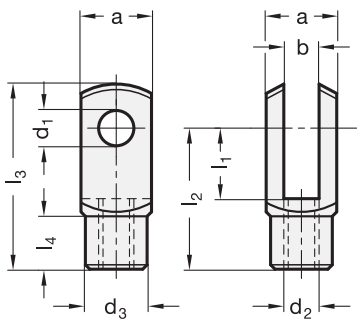

Fork joints GN 751

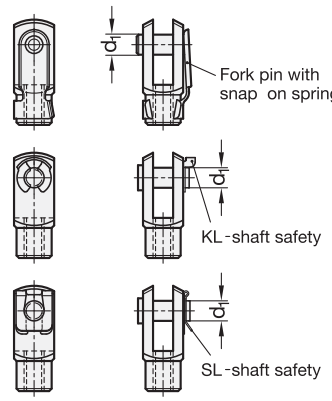

4 Type

B Pin with snap-on spring
KL Pin with KL-shaft safety
SL Pin with SL-shaft safety (only for d_1 = 4...16)

1 d_1 H9/h11	2 l_1		3 d_2			a	b	d_3	l_2		l_3		l_4
				Left hand thread	Fine thread								
4	8	16*	M 4	M 4L	-	8	4	8	16	24	21	29	6
5	10	20	M 5	M 5L	-	10	5	9	20	30	26	36	7,5
6	12	24	M 6	M 6L	-	12	6	10	24	36	31	43	9
8	16	32	M 8	M 8L	M 8F = M 8 x 1	16	8	14	32	48	42	58	12
10	20	40	M 10	M 10L	M 10F = M10 x 1,25	20	10	18	40	60	52	72	15
12	24	48	M 12	M 12L	M 12F = M12 x 1,25	24	12	20	48	72	62	86	18
14	28	56	M 14	M 14L	M 14F = M14 x 1,5	27	14	24	56	85	72	101	22,5
16	32	64	M 16	M 16L	M 16F = M16 x 1,5	32	16	26	64	96	83	115	24
20*	40	-	M 20	M 20L	-	40	20	34	80	-	105	-	30

* Type B is not availble from stock

Specification

- Steel
  - Tensile strength class 5 (500 N/mm²)
  - zinc plated, blue passivated
- Shaft safetys
  - spring sheet metal
  - hardened and tempered
  - zinc plated, blue passivated
- *ISO-Fundamental Tolerances → Page 1132*
- RoHS compliant

Information

Fork joints GN 751 consists of a fork head according DIN 71752 and a fork pin with KL-shaft (Type KL and SL) a fork pin with snap-on spring (Type B). Both versions can be dismantled without tools and moniter.

Size d_1 = 12 is supplied with a fine thread M12x1,5 according to DIN. In practice, however, M12x1,25 is preferred. Standard DIN 71752 does not foresee size d_1 = 20.

see also...
- *Fork joints (Aluminium) GN 751 → Page 954*

Fork joint		
GN 751-10-20-M10-B (1 2 3 4)	1	d_1
	2	l_1
	3	d_2
	4	Type

Fork head without pin		
DIN 71752-10-40-M10L (1 2 3)	1	d_1
	2	l_1
	3	d_2

Types of fork joint shafts

Snap-on spring

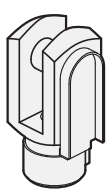

The snap-on spring is easily mounted and dismantled. It is therefore particularly suitable for applications where the articulated connection needs to be loosened often.

KL-shaft safety

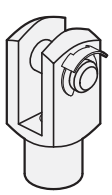

The KL-shaft safety ring can be fitted and dismantled without tools, i.e. by hand.

SL-shaft safety

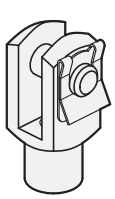

The SL-shaft safety ring requires a tool for dismantling (e.g. a screw driver). It is therefore better secured.

Fork joints

Fork head DIN 71752, Aluminium

Fork head DIN 71752

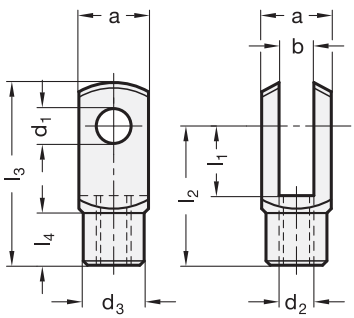

Fork joints GN 751

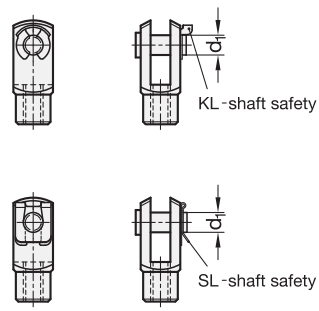

4 Type

KL Pin with KL-shaft safety
SL Pin with SL-shaft safety

1 d_1 h11	2 l_1		3 d_2	a	b	d_3	l_2		l_3		l_4
4	8	16*	M 4	8	4	8	16	24	21	29	6
5	10	20*	M 5	10	5	9	20	30	26	36	7,5
6	12	24*	M 6	12	6	10	24	36	31	43	9
8	16	32*	M 8	16	8	14	32	48	42	58	12
10	20	40*	M 10	20	10	18	40	60	52	72	15
12	24	48*	M 12	24	12	20	48	72	62	86	18
14	28	56*	M 14	27	14	24	56	85	72	101	22,5
16	32	64*	M 16	32	16	26	64	96	83	115	24

* not availble from stock, requires a minimum order quantity

Specification

5

- Aluminium anodized, black — **AL**
- KL- / SL-shaft safetys
  - Spring steel
  - hardened and tempered
  - zinc plated, blue passivated
- *ISO-Fundamental Tolerances → Page 1132*
- RoHS compliant

Information

Fork joints GN 751 in Aluminium consist of a fork head according DIN 71752 and a pin with KL-shaft safety or SL-shaft safety.

Owing to the anodized coating of the fork head and of the bolt, the bearing is virtually non-wearing.

see also...
- *Fork joints (Steel) GN 751 → Page 952*
- *Stainless Steel-Fork joints GN 751 → Page 955*

Fork joint

1 2 3 4 5
GN 751-8-16-M8-SL-AL

1	d_1
2	l_1
3	d_2
4	Type
5	Material

Fork head without pin

1 2 3 4
DIN 71752-12-24-M12-AL

1	d_1
2	l_1
3	d_2
4	Material

Stainless Steel-Fork joints

Stainless Steel-Fork heads DIN 71752

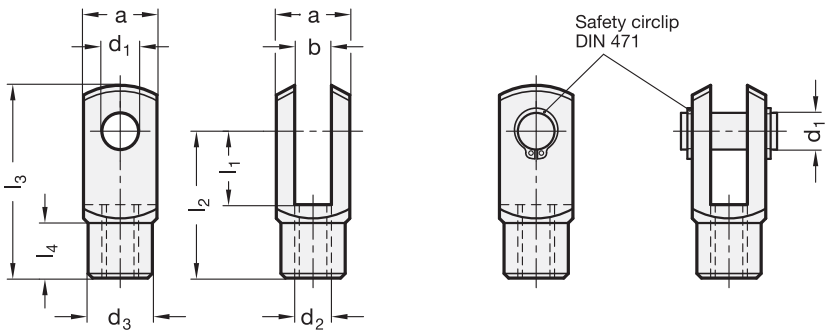

Inox Stainless Steel

4 Type

A Pin with safety circlip DIN 471

1 d_1 H9/h11	2 l_1		3 d_2	a	b	d_3	l_2		l_3		l_4
4	8	16	M 4	8	4	8	16	24	21	29	6
5	10	20	M 5	10	5	9	20	30	26	36	7,5
6	12	24	M 6	12	6	10	24	36	31	43	9
8	16	32	M 8	16	8	14	32	48	42	58	12
10	20	40	M 10	20	10	18	40	60	52	72	15
12	24	48	M 12	24	12	20	48	72	62	86	18
14	28	56	M 14	28	14	24	56	85	72	101	22,5
16	32	64	M 16	32	16	26	64	96	83	115	24
20	40	-	M 20	40	20	34	80	-	105	-	30

Specification

5

- Stainless Steel AISI 303 **NI**
  - matt, shot-blasted
- Safety circlip DIN 471
  Stainless Steel
  German Material No. 1.4122
- *ISO-Fundamental Tolerances → Page 1132*
- *Stainless Steel characteristics → Page 1144*
- RoHS compliant

Information

Stainless Steel-Fork joints GN 751 consists of a fork head according to DIN 71752 and a pin with two safety circlips DIN 471.

Standard DIN 71752 does not foresee size d_1 = 20.

see also...

- *Fork joints (Steel) GN 751 → Page 952*
- *Fork joints (Aluminium) GN 751 → Page 954*

Stainless Steel-Fork joint		
1 2 3 4 5	1	d_1
GN 751-8-16-M8-A-NI	2	l_1
	3	d_2
	4	Type
	5	Material

Stainless Steel-Fork head without pin		
1 2 3 5	1	d_1
DIN 71752-6-24-M6-NI	2	l_1
	3	d_2
	5	Material

Joint pieces

for Fork joints GN 751

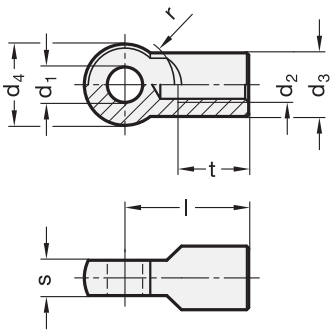

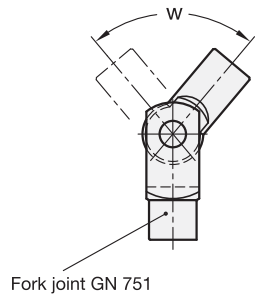

Inox
Stainless
Steel

1 d_1 H9	2 d_2	d_3	d_4	Length l	r	s –0,2	t min.	w min.
6	M 6	10	14	22	8,5	6	12	218°
8	M 8	14	18	29	12	8	16	218°
10	M 10	18	23	35	14	10	20	212°
12	M 12	20	27	43	17	12	24	216°
14	M 14	24	30	50	19	14	28	214°
16	M 16	26	36	56	22	16	32	216°

Specification

3

- Steel
  - Tensile strength class 5 (500 N/mm²)
  - zinc plated, blue passivated
- Stainless Steel AISI 303 **NI**
- *ISO-Fundamental Tolerances → Page 1132*
- *Stainless Steel characteristics → Page 1144*
- RoHS compliant

Information

Joints pieces GN 752 are designed to be used in combination with fork heads DIN 71752 respectively fork joints GN 751.

see also...

- *Swing nuts GN 444.2 → Page 518*
- *Fork head DIN 71752 (Steel) → Page 952*
- *Forkl joints GN 751 (Steel) → Page 952*

Steel-Joint piece		
GN 752-10-M10 (1 2)	1	d_1
	2	d_2

Stainless Steel-Joint piece		
GN 752-8-M8-NI (1 2 3)	1	d_1
	2	d_2
	3	Material

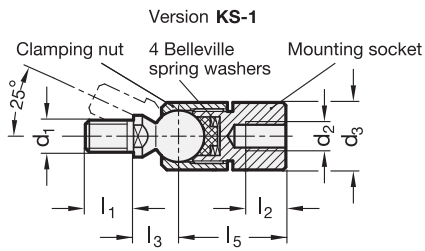

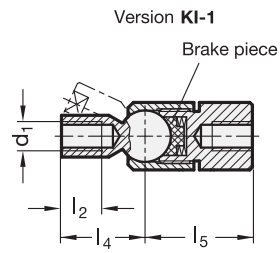

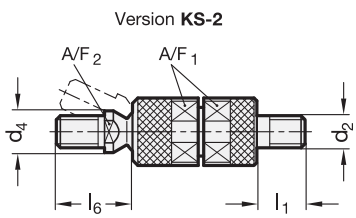

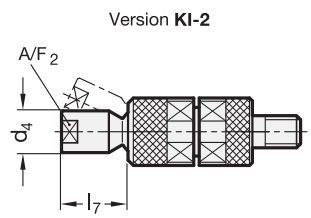

2 Type

KS Ball with male thread
KI Ball with female thread

3 Identification No.

1 Mounting socket with female thread
2 Mounting socket with male thread

1

d_1	d_2	d_3	d_4	l_1	l_2	l_3	l_4	l_5 $^{+1,0}_{-0,3}$	l_6 ≈	l_7 ≈	A/F_1	A/F_2	recommended tightening torque in Nm
M 8	M 8	19	11	12	10	12,5	23	29,5	19,5	18	17	9	17
M 10	M 10	21	13	15	12	14	26	33,5	23,5	20	19	11	34

Specification

- Steel
  zinc plated, blue passivated
- Brake piece
  Technopolymer (Polyamide PA)
- RoHS compliant

Information

The clamping nut of the ball joints GN 782 can be set to give a required thrust on the Belleville spring washers in order to increase the resistance to the ball movement.

At the same time the Belleville spring washers act as safety washers for the screws.

Once the max. thrust to the Belleville spring washers is reached the ball arm is firmly immobilised in position over the clamping nut and screw.

How to order		
GN 782-M10-KS-1 (1 = M10, 2 = KS, 3 = 1)	1	d_1
	2	Type
	3	Identification No.

Angled ball joints

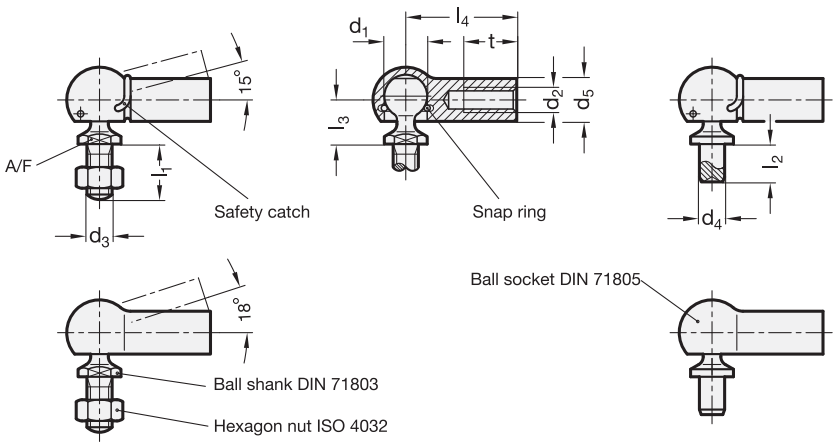

4 Type

- **CS** with threaded ball shank with safety catch
- **C** with threaded ball shank without safety catch
- **BS** with rivet ball shank, with safety catch
- **B** with rivet ball shank, without safety catch

1 d_1 H9/h9	2 d_2	Left hand thread	3 l_2		d_3	d_4 h11	d_5	l_1	l_3	l_4	t min.	A/F	min. pull-off force in N
8	M 5	M 5L	4	7,5	M 5	5	8	10	9	22	10,5	7	30
10	M 6	M 6L	4,5	8	M 6	6	10	12,5	11	25	11,5	8	40
13	M 8	M 8L	5	10	M 8	8	13	16,5	13	30	14	11	60
16	M 10	M 10L	6	13	M 10	10	16	20	16	35	15,5	13	80
16	M 12	M 12L	6	13	M 12	10	16	20	16	35	15,5	13	80
19	M 14F (≙M 14 x 1,5)	M 14FL (≙M 14 x 1,5L)	12	18	M 14F (≙M 14 x 1,5)	14	22	28	20	45	21,5	16	100

Specification

- Steel
  - Tensile strength class 5 (500 N/mm²)
  - zinc plated, colourless passivated
- Ball
  Steel
  - hardened
  - ball seat lubricated
- *ISO-Fundamental tolerances → Page 1132*
- RoHS compliant

On request

- smooth specification (Ball seat with play)
- Ball studs DIN 71803
- Ball sockets DIN 71805
- Axial joints (ball socket and ball shank in one axis)

Information

Angled ball joints DIN 71802 consist of a ball socket DIN 71805 and a ball shank DIN 71803.

The angle of rotation for the type with safety catch (Type CS, BS) is 15°, without safety catch (Type C, B) is 18°.

For assembly the ball ist pushed through the circlip which acts as a retainer. Should the retaining force (see pull-off force in the table above) between ball and socket not be sufficient, this can be increased by adding a safety catch, which can easily be fitted.

To protect the angled ball point, a dust cap GN 710 can be added.

The hexagon nut is part of the angled ball joints.

Dust caps GN 710 → *Page 960* have to be ordered seperately.

Angled ball joints with threaded ball shank

1 2 4
DIN 71802-19-M14FL-CS

1	d_1
2	d_2
4	Type

Angled ball joints with rivet ball shank

1 2 3 4
DIN 71802-13-M8-10-B

1	d_1
2	d_2
3	l_2
4	Type

Stainless Steel-Angled ball joints

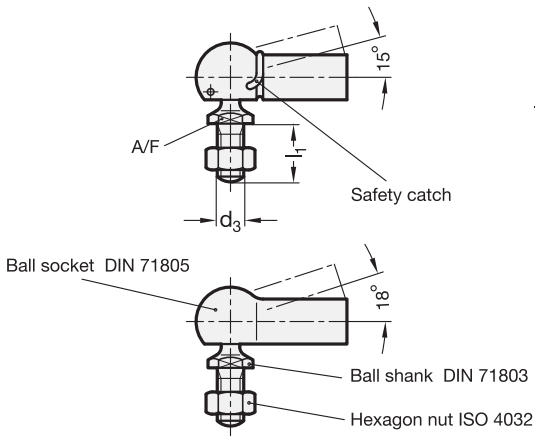

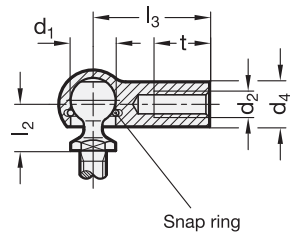

Rost frei — Inox Stainless Steel

3 Type

CSN with threaded ball shank, with safety catch

CN with threaded ball shank, without safety catch

1 d_1 H9/h9	2 d_2	Left hand thread	d_3	d_4	l_1	l_2	l_3	t min.	A/F	min. pull-off force in N
8	M 5	M 5L	M 5	8	10	9	22	10,5	7	30
10	M 6	M 6L	M 6	10	12,5	11	25	11,5	8	40
13	M 8	M 8L	M 8	13	16,5	13	30	14	11	60
16	M 10	M 10L	M 10	16	20	16	35	15,5	13	80
16	M 12	M 12L	M 12	16	20	16	35	15,5	13	80
19	M 14F (≙M 14 x 1,5)	M 14FL (≙M 14 x 1,5L)	M 14F (≙M 14 x 1,5)	22	28	20	45	21,5	16	100

Specification

- Stainless Steel AISI 303
- Ball
  Stainless Steel
  - not hardened
  - ball seat greased
- *ISO-Fundamental Tolerances → Page 1132*
- RoHS compliant

On request

- smooth specification
  (Ball seat with play)
- Ball studs DIN 71803
- Ball sockets DIN 71805
- Axial joints
  (ball socket and ball shank in one axis)

Information

Stainless Steel-Angled ball joints DIN 71802 consist of a ball socket DIN 71805 and a ball shank DIN 71803.

The angle of rotation for the type with safety catch (Type CSN) is 15°, without safety catch (Type CN) is 18°.

For assembly the ball ist pushed through the circlip which acts as a retainer. Should the retaining force (see pull-off force in the table above) between ball and socket not be sufficient, this can be increased by adding a safety catch, which can easily be fitted.

To protect the angled ball point, a dust cap GN 710 can be added.

The hexagon nut is part of the angled ball joints.

Dust caps GN 710 → *Page 960* have to be ordered seperately.

How to order		
DIN 71802-10-M6L-CN (1 2 3)	1	d_1
	2	d_2
	3	Type

Dust caps

for angled ball joints DIN 71802

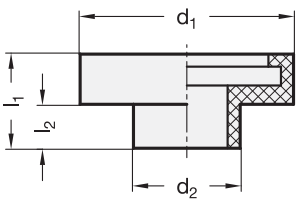

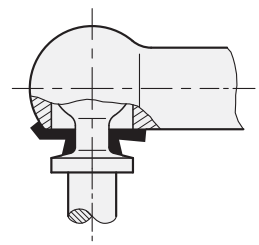

1

d_1	d_2	l_1	l_2	for angled ball joints DIN 71802 Size (d_1)
12	5,5	4,5	1,5	8
13,5	7	6,5	3,5	10
17,5	8,5	7,5	3,5	13
22	10,5	8,5	4,5	16
25,5	12,5	12,5	7	19

Specification

- Rubber (CR)
  - temperature resistant up to 110 °C
  - black
- *Elastomer characteristics → Page 1140*
- RoHS compliant

On request

- Angled ball joints with mounted dust cap

Information

Dust caps GN 710 prevent the entering of dirt into angled ball joints DIN 71802.

see also...

- *Angled ball joints DIN 71802 → Page 958*
- *Stainless Steel-Angled ball joints DIN 71802 → Page 959*

How to order		
1 GN 710-17,5	1	d_1

Quick-fit couplings

with radial off-set compensation

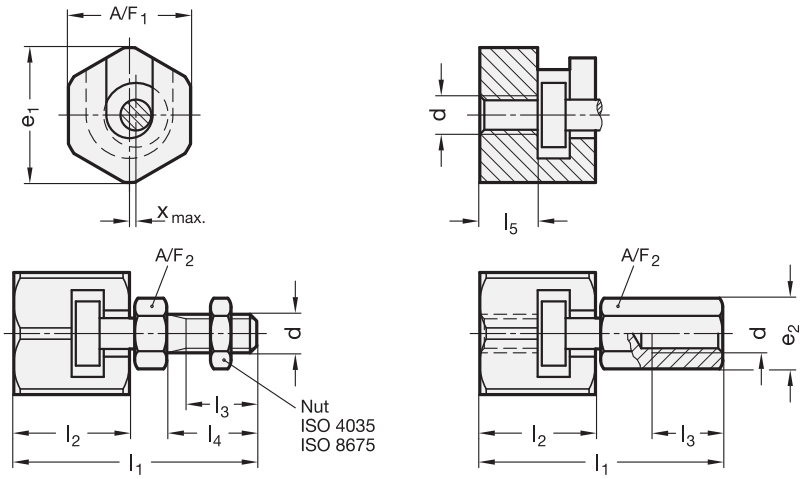

2 Type

A with male thread
B with female thread

1

d		e_1	e_2 ≈	l_1 ≈	l_2	l_3 min.	l_4	l_5 +1	A/F_1	A/F_2	x max. shaft off-set	max. pull- /push load in kN
M 6	-	21	11	37,5	18	11	14	9	19	10	0,6	2,5
M 8	-	26	14,5	45	22,5	13,5	17	11,5	24	13	0,7	4,5
M 10	M 10 x 1,25	30	19	56	29	16	20	16	27	17	0,7	6,5
M 12	M 12 x 1,25	32,5	21	66,5	34	21	25	17	30	19	0,8	10
M 16	M 16 x 1,5	39	27	83	42	25	30	23	36	24	1	18
M 20	M 20 x 1,5	44	34	93,5	45,5	29	35	23,5	41	30	1	30

Specification

- Steel
  - tempered
  - phosphated
- RoHS compliant

Information

Quick-fit couplings GN 240 have been designed for the purpose of compensating a radial shaft off-set x. A typical application is the axial link to a piston rod of a cylinder operating in any type of fixture or system.

The coupling is **not** designed for the transfer of torque.

see also...

- *Quick-fit couplings GN 240.1 (with radial off-set compensation) → Page 962*
- *Quick-fit couplings GN 240.2 (with angle- and radial off set compensation) → Page 963*

How to order		
GN 240-M20x1,5-A (1 = d, 2 = Type)	1	d
	2	Type

Quick-fit couplings

with radial off-set compensation

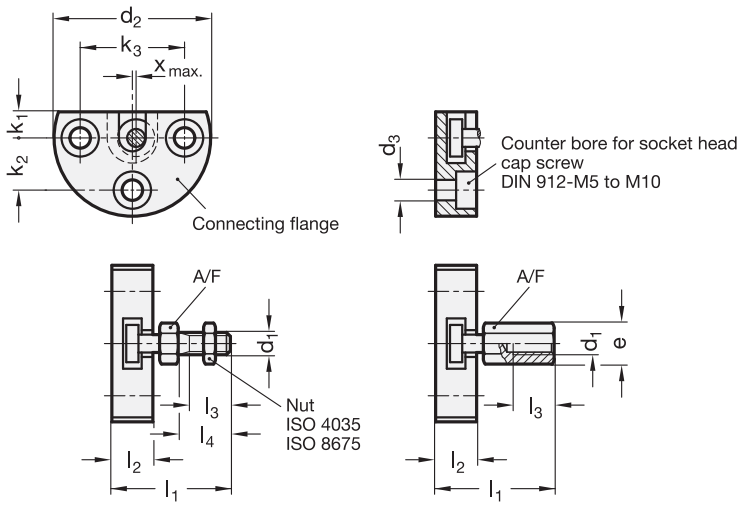

2 Type

A with male thread
B with female thread

1

d_1		d_2	d_3	e ≈	k_1	k_2	k_3	l_1 ≈	l_2	l_3 min. Type A	Type B	l_4	A/F	x max. shaft off-set	max. pull- /push load in kN
M 6	-	42	5,5	11	7	14	28	30,5	11	11	11	14	10	0,6	2,5
M 8	-	48	6,5	14,5	8	16	32	35,5	13	13,5	13,5	17	13	0,7	4,5
M 10	M 10 x 1,25	50	6,5	19	9	17	34	43	16	16	15	20	17	0,7	6,5
M 12	M 12 x 1,25	55	6,5	21	10	19	38	53	20,5	21	17,5	25	19	0,8	10
M 16	M 16 x 1,5	65	9	27	12,5	22,5	45	64	23	25	22	30	24	1	18
M 20	M 20 x 1,5	80	11	34	17	28	56	74	26	29	25	35	30	1	30

Specification

- Steel
  - tempered
  - phosphated
- RoHS compliant

Information

Quick-fit couplings GN 240.1 have been designed for the purpose of compensating in radial shaft-off-set x. A typical application is the axial link to a piston rod of a cylinder operating any type of fixture or system.

The coupling is **not** designed for the transfer of torque.

see also...

- *Quick-fit couplings GN 240 (with radial off-set compensation) → Page 961*

How to order		
GN 240.1-M12x1,25-B (1 = d_1, 2 = Type)	1	d_1
	2	Type

Quick-fit couplings

with angle- and radial off-set compensation

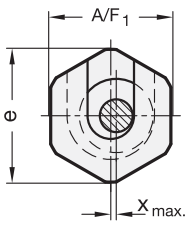

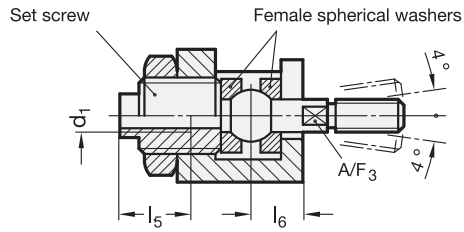

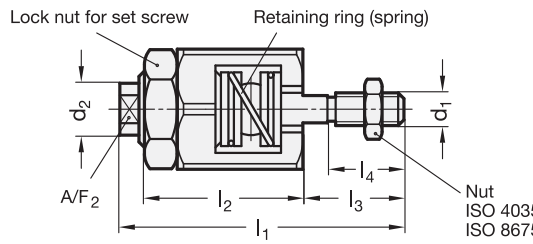

d1		d2	e	l1 ≈	l2	l3	l4	l5 min.	l6	A/F1	A/F2	A/F3	x max. shaft off-set	max. pull- /push load in kN
M 6	-	9,5	24,5	52	29	18,5	14	13	9,5	22	8	5	0,6	2,5
M 8	-	15	30	63	33	23,5	18	16	11,5	27	13	7	0,7	4,5
M 10	M 10 x 1,25	21	44	81	43	30,5	22	24	16	41	18	12	0,7	6,5
M 12	M 12 x 1,25	21	44	85	43	34,5	26	24	16	41	18	12	0,8	10
M 16	M 16 x 1,5	32	60	121	62	45	34	34	26	55	27	18	1	18
M 20	M 20 x 1,5	32	60	129	62	53	42	34	26	55	27	18	1	30

Specification

- Steel
  - tempered
  - phosphated
- Retaining ring (spring)
  Stainless Steel AISI 631
- RoHS compliant

Information

Quick-fit couplings GN 240.2 have been designed to compensate a **radial** and **angular** off-set. Furthermore they are axially **freely** adjustable via the set screw.

A typical application is the axial link to a piston rod of a cylinder operating in any type of fixture or system.

The coupling is renowned by its very compact construction without any loose components.

It is **not** designed for the transfer of torque.

see also...
- *Quick-fit couplings GN 240 (with radial off-set compensation) → Page 961*

How to order		
GN 240.2-M20x1,5	1	d1